ALPINE CITY PLANNING COMMISSION MEETING

NOTICE is hereby given that the **PLANNING COMMISSION** of Alpine City, UT will hold a **Regular Meeting at Alpine City Hall,** 20 North Main, Alpine, Utah on **Tuesday, June 18, 2019 at 7:00 pm** as follows:

I. GENERAL BUSINESS

A. Welcome and Roll Call: David Fotheringham
B. Prayer/Opening Comments: Sylvia Christiansen
C. Pledge of Allegiance: By Invitation

II. PUBLIC COMMENT

Any person wishing to comment on any item not on the agenda may address the Planning Commission at this point by stepping to the microphone and giving his or her name and address for the record.

III. ACTION ITEMS

A. Public Hearing – Site Plan – Proposed Wireless Tower at Burgess Park – Verizon Wireless
Planning Commission will hold a public hearing and make a recommendation on the proposed site plan for a new monopole tower in Burgess Park.

B. Public Hearing – Site Plan – Antenna Upgrade at Beck's Hill – T-Mobile
Planning Commission will hold a public hearing and make a recommendation on the proposed antenna upgrades.

C. Public Hearing – Amendment to Development Code – Uses Within Buildings in Business/Commercial Zone
Planning Commission will hold a public hearing and make a recommendation on the proposed changes to Article 3.07.080.1 regarding commercial activities within buildings in the Business Commercial Zone.

D. Setback Exception – Proposed Site Plan in Business/Commercial Zone – Paul Anderson
Planning Commission will review and make recommendation on the proposed setback exception.

IV. COMMUNICATIONS

V. APPROVAL OF PLANNING COMMISSION MINUTES: June 4, 2019

ADJOURN

Chairman David Fotheringham
June 18, 2019

THE PUBLIC IS INVITED TO ATTEND ALL PLANNING COMMISSION MEETINGS. If you need a special accommodation to participate in the meeting, please call the City Recorder's Office at 801-756-6347 ext. 5.

CERTIFICATION OF POSTING. The undersigned duly appointed recorder does hereby certify that the above agenda notice was posted at Alpine City Hall, 20 North Main, Alpine, UT. It was also sent by e-mail to The Daily Herald located in Provo, UT a local newspaper circulated in Alpine, UT. This agenda is also available on the City's web site at www.alpinecity.org and on the Utah Public Meeting Notices website at www.utah.gov/pmn/index.html.

PUBLIC MEETING AND PUBLIC HEARING ETIQUETTE

Please remember all public meetings and public hearings are now recorded.

- All comments **must** be recognized by the Chairperson and addressed through the microphone.
- When speaking to the Planning Commission, please stand, speak slowly and clearly into the microphone, and state your name and address for the recorded record.
- Be respectful to others and refrain from disruptions during the meeting. Please refrain from conversation with others in the audience as the microphones are very sensitive and can pick up whispers in the back of the room.
- Keep comments constructive and not disruptive.
- Avoid verbal approval or dissatisfaction of the ongoing discussion (i.e., booing or applauding).
- Exhibits (photos, petitions, etc.) given to the City become the property of the City.
- Please silence all cellular phones, beepers, pagers or other noise making devices.
- Be considerate of others who wish to speak by limiting your comments to a reasonable length, and avoiding repetition of what has already been said. Individuals may be limited to two minutes and group representatives may be limited to five minutes.
- Refrain from congregating near the doors or in the lobby area outside the council room to talk as it can be very noisy and disruptive. If you must carry on conversation in this area, please be as quiet as possible. (The doors must remain open during a public meeting/hearing.)

Public Hearing vs. Public Meeting

If the meeting is a **public hearing**, the public may participate during that time and may present opinions and evidence for the issue for which the hearing is being held. In a public hearing there may be some restrictions on participation such as time limits.

Anyone can observe a **public meeting**, but there is no right to speak or be heard there - the public participates in presenting opinions and evidence at the pleasure of the body conducting the meeting.

ALPINE PLANNING COMMISSION AGENDA

SUBJECT: Site Plan – Proposed Wireless Tower at Burgess Park

FOR CONSIDERATION ON: 18 June 2019

PETITIONER: Verizon Wireless

ACTION REQUESTED BY PETITIONER: Review and recommend approval of the proposed site plan.

BACKGROUND INFORMATION:

The petitioner has submitted a site plan for a new wireless telecommunications tower. The proposed tower is an 80-foot tall monopole tower designed to look like a pine tree ("Monopine" design). It is proposed that the tower be located at the south end of Burgess Park, just north of the southern baseball diamond.

Staff have reviewed the proposed site plan and found that it meets the requirements set forth in the Development Code for a new tower. New wireless communications towers shall meet the following requirements found in Article 3.27 of the Aline City Development Code:

a) Location
   i. The proposed site is on City owned property, which is an approved location. Tower is also to be located away from other towers (1/4 mile) and can be no closer than two times the height of the tower to a residence, and the proposed tower meets these requirements.

b) Type of Tower
   i. The proposed tower is a monopole type tower, which is a permitted type of tower, and does not exceed the 80-foot height limit.

c) Co-Location
   i. Towers shall be large enough to "accommodate at least two (2) additional wireless telecommunications providers". The tower is a 3-carrier tower.

d) Safety
   i. Towers must comply with FCC and FAA regulations. The petitioner has submitted documentation to support this.
   ii. Tower must be protected against unauthorized climbing. Plans show no climbing pegs on the lower portion of the tower.
   iii. Fencing. Tower must be enclosed by a minimum 6-foot high fence. Plans show 6-foot chain-link with barb wire.
   iv. Lighting. Must meet FAA regulations. Petitioner has submitted site plan data to FAA for review.
   v. Emergency. City holds the right to move or alter the facility in case of an emergency.

e) Additional Requirements

i. Accessory Structures. Any structure on site cannot exceed 450 square feet. Plans show no structures that exceed the requirement.

ii. Parking. If no parking is present it must be provided. Burgess Park has plenty of parking.

iii. Maintenance. Site will be visited once per month by certified tech.

iv. Landscaping. A landscaping plan is required, which has been provided as part of the site plan. To be reviewed and recommended by Planning Commission and approved by City Council.

v. Fencing. City can determine the type of fencing if needed.

vi. Color and materials. City typically makes an administrative decision as to the look of the tower; however, the City Council reviewed the proposal for color and materials and selected the Monopine design.

vii. Facility Signs. Facility shall only have signs for emergency contact info, public safety, warnings, certification, and other required seals.

viii. Utility Lines. Line shall be buried. The proposed plans show the utilities located underground.

ix. Business License. Annual business license shall be required for each facility.

Petitioner is asking that the Planning Commission to review and recommend approval of the proposed site plan. Staff has reviewed the proposed site plan and application and it appears to meet the requirements set forth in the Development Code.

STAFF RECOMMENDATION:

Review and consider approving the proposed site plan and conditional use.

Sample Motion to Approve:
I motion to approve the site plan as proposed.

Sample Motion to Deny:
I motion that the site plan be denied based on the following:

- ***Insert Finding***

verizon

PRO - DIGIOUS

SITE INFORMATION

APPLICANT:
VERIZON WIRELESS
9656 SOUTH PROSPERITY ROAD
WEST JORDAN, UTAH 84088

SITE ADDRESS:
CANYON CREST ROAD AND PARKWAY DRIVE
ALPINE, UTAH 84004

LATITUDE AND LONGITUDE:
N 40°27'02.58", W 111°47'06.88"

ZONING JURISDICTION:
ALPINE CITY

PROJECT DESCRIPTION:
VZW IS PROPOSING TO CONSTRUCT AN UNMANNED COMMUNICATIONS FACILITY CONSISTING OF ANTENNAS MOUNTED TO A NEW MONOPINE WITH OUTDOOR EQUIPMENT AND GENERATOR

TYPE OF CONSTRUCTION:
OUTDOOR EQUIPMENT AND GENERATOR, MONOPINE, AND ANTENNAS

HANDICAP REQUIREMENTS:
FACILITY IS UNMANNED AND NOT FOR HUMAN HABITATION, HANDICAP ACCESS REQUIREMENTS DO NOT APPLY

POWER COMPANY:
ROCKY MOUNTAIN POWER, 1-888-221-7070

CONTACT INFORMATION

SITE ACQUISITION:
TECHNOLOGY ASSOCIATES EC, INC
7896 SOUTH HIGHLAND DRIVE, SUITE 200
COTTONWOOD HEIGHTS, UTAH 84121
CONTACT: TROY BENSON
PHONE: 801-608-7042

LOCATION MAP

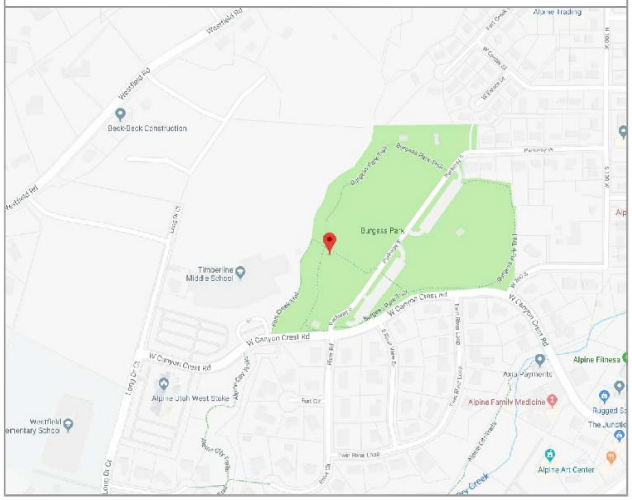

DO NOT SCALE DRAWINGS

CONTRACTOR SHALL VERIFY ALL PLANS, AND EXISTING DIMENSIONS, AND CONDITIONS ON THE JOB SITE, AND SHALL IMMEDIATELY NOTIFY THE ENGINEER IN WRITING OF ANY DISCREPANCIES BEFORE PROCEEDING WITH THE WORK OR BE RESPONSIBLE FOR SAME

DRIVING DIRECTIONS

FROM THE VZW WEST JORDAN OFFICES, TAKE I-15 SOUTH FOR 6 MILES TO HIGHLAND/ALPINE EXIT #284 FOR S.R. 92. TURN LEFT (HEADING EAST) AND TAKE A SLIGHT RIGHT ON THE TIMPANOGOS HIGHWAY COMMUTER LANE AND CONTINUE EAST FOR 5.3 MILES TO 5300 WEST. TURN LEFT AND HEAD NORTH FOR 1.2 MILES TO THE TRAFFIC CIRCLE. TAKE THE THIRD EXIT OF THE TRAFFIC SIGNAL FOR CANYON CREST ROAD AND HEAD NORTHWESTERLY FOR 0.5 MILES TO PARKWAY DRIVE. TURN RIGHT AND GO NORTH TO THE PARKING LOT ON THE RIGHT (EAST) SIDE OF THE STREET. THE VZW FACILITY WILL BE LOCATED NORTH OF THE BASEBALL FIELD ON THE LEFT (WEST) SIDE OF THE STREET.

APPROVALS

VERIZON WIRELESS REPRESENTATIVE:	
VERIZON WIRELESS RF ENGINEER:	
TAEC SITE ACQUISITION:	
TAEC CONSTRUCTION MANAGER:	
SITE OWNER:	

DRAWING INDEX

SHEET NO.	SHEET TITLE	REV	REV DATE
T100	TITLE SHEET, VICINITY MAP, GENERAL SITE INFORMATION	0	
SURV	SITE SURVEY	0	
C100	OVERALL SITE PLAN	0	
C101	ENLARGED SITE PLAN	0	
C200	SITE ELEVATIONS	0	

UNDERGROUND SERVICE ALERT, CALL 'BLUE STAKES OF UTAH' @ 811 OR 1-800-662-4111
THREE WORKING DAYS BEFORE YOU DIG

verizon
9656 SOUTH PROSPERITY ROAD
WEST JORDAN, UTAH 84088

Technology Associates

UTAH MARKET OFFICE
7896 SOUTH HIGHLAND DRIVE, SUITE 200
COTTONWOOD HEIGHTS, UTAH 84121

CORPORATE OFFICE
3115 SOUTH MELROSE DRIVE, SUITE #110
CARLSBAD, CALIFORNIA 92010

DRAWN BY:	JAY C
CHECKED BY:	TROY B

REV	DATE	DESCRIPTION
0	04.23.2019	ZONING DRAWINGS

PRO - DIGIOUS
SW SEC 24 & SE SEC 25, T4S, R1E
CANYON CREST ROAD AND PARKWAY DRIVE
ALPINE, UTAH 84004

SHEET TITLE
TITLE SHEET
VICINITY MAP
GENERAL INFORMATION

SHEET NUMBER
T100

ASAC INFORMATION SHEET 91:003

INFORMATION REGARDING SURVEY DATA SUBMITTED TO THE FAA

FAA Order 8260.19c requires proponents of certain proposed construction (located beneath instrument procedures) provide the FAA with a site survey and/or letter, from a licensed land surveyor, which certifies the site coordinates and the surface elevation at the site. On October 15, 1992, the FAA started using the North American Datum of 1983 (NAD-83), and therefore all site coordinates should be based on NAD-83. The FAA requires that the survey letter contain an accuracy statement that meets accuracy tolerances required by the FAA. The most requested tolerances are +/- 50 feet in the horizontal and +/- 20 feet in the vertical (2-C). When the site coordinates and/or site elevation can be certified to a greater accuracy than requested by the FAA, please do so.

In order to avoid FAA processing delays, the original site survey or certifying letter should be attached to the 7460 when it is filed at the FAA's regional office. It must be signed and sealed by the licensed land surveyor having performed or supervised the survey.

The FAA accuracy codes and a sample accuracy statement are listed below.

ACCURACY CODES:

HORIZONTAL		VERTICAL	
Code	Tolerance	Code	Tolerance
1	+/- 15 ft	A	+/- 3 ft
2	+/- 50 ft	B	+/- 10 ft
3	+/- 100 ft	C	+/- 20 ft
4	+/- 250 ft	D	+/- 50 ft
5	+/- 500 ft	E	+/- 125 ft
6	+/- 1000 ft	F	+/- 250 ft
7	+/- 1/2 NM	G	+/- 500 ft
8	+/- 1 NM	H	+/- 1000 ft
9	Unknown	I	Unknown

Date: APRIL 22, 2019

Re: PRO - DIGIOUS
SW 1/4 OF SECTION 24, TOWNSHIP 4 SOUTH, RANGE 1 EAST, SALT LAKE MERIDIAN

I certify that the latitude of N 40°27'02.58", and the longitude of W 111°47'06.88", are accurate to within 15 feet horizontally and the site elevation of 4917 feet, AMSL (American Mean Sea Level), is accurate to within +/- 3 feet vertically. The horizontal datum (coordinates) are in terms of the North American Datum of 1983 (NAD-83) and are expressed as degrees, minutes and seconds, to the nearest (tenth/hundredth) of a second. The vertical datum (heights) are in terms of the (NAVD88) and are determined to the nearest foot.

Professional Licensed Land Surveyor: _____
1-A FAA Letter Jerry Fletcher, Utah LS no. 6436064

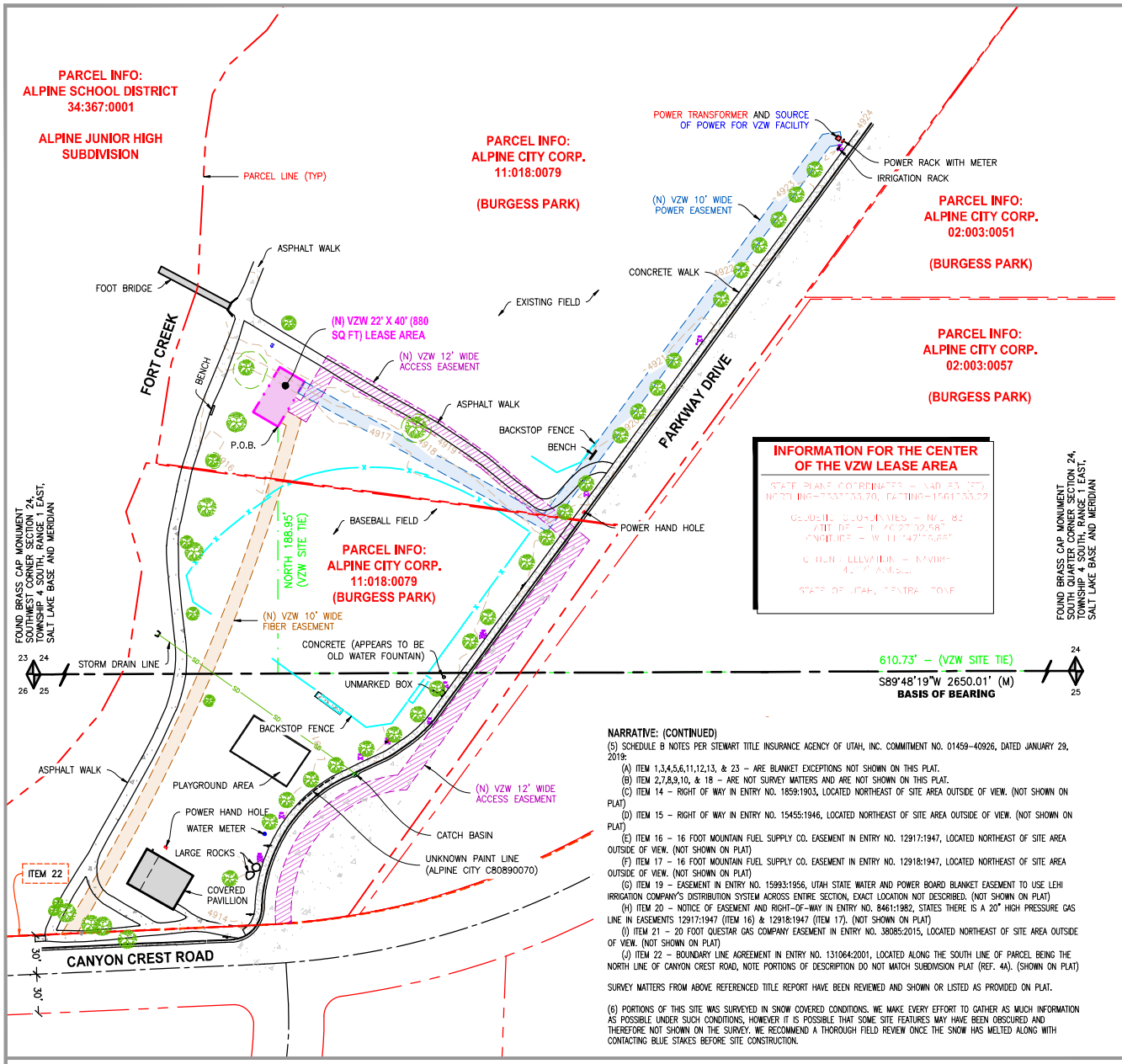

NARRATIVE: (CONTINUED)

(5) SCHEDULE B NOTES PER STEWART TITLE INSURANCE AGENCY OF UTAH, INC. COMMITMENT NO. 01459–40926, DATED JANUARY 29, 2019:

(A) ITEM 1,3,4,5,6,11,12,13, & 23 – ARE BLANKET EXCEPTIONS NOT SHOWN ON THIS PLAT.
(B) ITEM 2,7,8,9,10, & 18 – ARE NOT SURVEY MATTERS AND ARE NOT SHOWN ON THIS PLAT.
(C) ITEM 14 – RIGHT OF WAY IN ENTRY NO. 1859:1903, LOCATED NORTHEAST OF SITE AREA OUTSIDE OF VIEW. (NOT SHOWN ON PLAT)
(D) ITEM 15 – RIGHT OF WAY IN ENTRY NO. 15455:1946, LOCATED NORTHEAST OF SITE AREA OUTSIDE OF VIEW. (NOT SHOWN ON PLAT)
(E) ITEM 16 – 16 FOOT MOUNTAIN FUEL SUPPLY CO. EASEMENT IN ENTRY NO. 12917:1947, LOCATED NORTHEAST OF SITE AREA OUTSIDE OF VIEW. (NOT SHOWN ON PLAT)
(F) ITEM 17 – 16 FOOT MOUNTAIN FUEL SUPPLY CO. EASEMENT IN ENTRY NO. 12918:1947, LOCATED NORTHEAST OF SITE AREA OUTSIDE OF VIEW. (NOT SHOWN ON PLAT)
(G) ITEM 19 – EASEMENT IN ENTRY NO. 15993:1956, UTAH STATE WATER AND POWER BOARD BLANKET EASEMENT TO USE LEHI IRRIGATION COMPANY'S DISTRIBUTION SYSTEM ACROSS ENTIRE SECTION, EXACT LOCATION NOT DESCRIBED. (NOT SHOWN ON PLAT)
(H) ITEM 20 – NOTICE OF EASEMENT AND RIGHT–OF–WAY IN ENTRY NO. 8461:1982, STATES THERE IS A 20" HIGH PRESSURE GAS LINE IN EASEMENTS 12917:1947 (ITEM 16) & 12918:1947 (ITEM 17). (NOT SHOWN ON PLAT)
(I) ITEM 21 – 20 FOOT QUESTAR GAS COMPANY EASEMENT IN ENTRY NO. 38085:2015, LOCATED NORTHEAST OF SITE AREA OUTSIDE OF VIEW. (NOT SHOWN ON PLAT)
(J) ITEM 22 – BOUNDARY LINE AGREEMENT IN ENTRY NO. 131064:2001, LOCATED ALONG THE SOUTH LINE OF PARCEL BEING THE NORTH LINE OF CANYON CREST ROAD, NOTE PORTIONS OF DESCRIPTION DO NOT MATCH SUBDIVISION PLAT (REF. 4A). (SHOWN ON PLAT)

SURVEY MATTERS FROM ABOVE REFERENCED TITLE REPORT HAVE BEEN REVIEWED AND SHOWN OR LISTED AS PROVIDED ON PLAT.

(6) PORTIONS OF THIS SITE WAS SURVEYED IN SNOW COVERED CONDITIONS. WE MAKE EVERY EFFORT TO GATHER AS MUCH INFORMATION AS POSSIBLE UNDER SUCH CONDITIONS, HOWEVER IT IS POSSIBLE THAT SOME SITE FEATURES MAY HAVE BEEN OBSCURED AND THEREFORE NOT SHOWN ON THE SURVEY. WE RECOMMEND A THOROUGH FIELD REVIEW ONCE THE SNOW HAS MELTED ALONG WITH CONTACTING BLUE STAKES BEFORE SITE CONSTRUCTION.

CERTIFICATE OF SURVEY:

I, JERRY FLETCHER, PROFESSIONAL LAND SURVEYOR, STATE OF UTAH, LICENSE NUMBER 6436064, CERTIFY THAT I HAVE SUPERVISED A SURVEY ON THE GROUND AS SHOWN HEREON:

VERIZON WIRELESS LEASE SITE DESCRIPTION:

LOCATED IN THE SOUTHWEST QUARTER OF SECTION 24 AND THE SOUTHEAST QUARTER OF SECTION 25, TOWNSHIP 4 SOUTH, RANGE 1 EAST, SALT LAKE BASE AND MERIDIAN, UTAH COUNTY, STATE OF UTAH, AND BEING MORE PARTICULARLY DESCRIBED AS FOLLOWS:

BEGINNING AT A POINT LOCATED SOUTH 89°48'19" WEST 610.73 FEET ALONG SECTION LINE AND NORTH 188.95 FEET FROM THE SOUTH QUARTER CORNER OF SECTION 24, TOWNSHIP 4 SOUTH, RANGE 1 EAST, SALT LAKE BASE AND MERIDIAN AND RUNNING THENCE NORTH 59°27'43" WEST 22.00 FEET; THENCE NORTH 30°32'17" EAST 40.00 FEET; THENCE SOUTH 59°27'43" EAST 22.00 FEET; THENCE SOUTH 30°32'17" WEST 40.00 FEET TO THE POINT OF BEGINNING.

CONTAINS: 880 SQ. FT. OR 0.020 ACRES, MORE OR LESS, (AS DESCRIBED).

VERIZON WIRELESS ACCESS EASEMENT DESCRIPTION:

A 12 FOOT WIDE ACCESS AND UTILITY EASEMENT FOR THE PURPOSE OF INGRESS AND EGRESS, BEING 6 FEET ON EACH SIDE OF THE FOLLOWING DESCRIBED CENTERLINE:

BEGINNING AT A POINT ON THE SOUTHEASTERLY LINE OF THE VERIZON WIRELESS LEASE AREA, SAID POINT BEING SOUTH 89°48'19" WEST 600.56 FEET ALONG SECTION LINE AND NORTH 206.14 FEET FROM THE SOUTH QUARTER CORNER OF SECTION 24, TOWNSHIP 4 SOUTH, RANGE 1 EAST, SALT LAKE BASE AND MERIDIAN AND RUNNING THENCE SOUTH 59°27'43" EAST 11.00 FEET; THENCE NORTH 30°32'17" 40.24 FEET; THENCE SOUTH 59°56'17" EAST 92.25 FEET; THENCE SOUTH 55°23'02" EAST 46.93 FEET; THENCE SOUTH 49°31'21" EAST 94.45 FEET; THENCE SOUTH 36°15'48" WEST 228.45 FEET; THENCE ALONG A 100.60 FOOT NON–TANGENT ARC TO THE LEFT 156.93 FEET (CHORD BEARS SOUTH 40°02'29" WEST 141.50 FEET), MORE OR LESS, TO NORTH RIGHT–OF–WAY LINE OF CANYON CREST ROAD AND TERMINATING.

CONTAINS: 0.185 ACRES, MORE OR LESS, (AS DESCRIBED).

VERIZON WIRELESS UTILITY EASEMENT DESCRIPTION:

A 10 FOOT WIDE UTILITY EASEMENT FOR THE PURPOSE OF INSTALLING UNDERGROUND UTILITIES, BEING 5 FEET ON EACH SIDE OF THE FOLLOWING DESCRIBED CENTERLINE:

BEGINNING AT A POINT ON THE SOUTHEASTERLY LINE OF THE VERIZON WIRELESS LEASE AREA, SAID POINT BEING SOUTH 89°48'19" WEST 592.94 FEET ALONG SECTION LINE AND NORTH 219.03 FEET FROM THE SOUTH QUARTER CORNER OF SECTION 24, TOWNSHIP 4 SOUTH, RANGE 1 EAST, SALT LAKE BASE AND MERIDIAN AND RUNNING THENCE SOUTH 60°57'43" EAST 213.92 FEET; THENCE NORTH 36°15'36" EAST 363.08 FEET; THENCE NORTH 81°15'36" EAST 9.82 FEET, MORE OR LESS, TO AN EXISTING POWER TRANSFORMER AND TERMINATING.

CONTAINS: 0.135 ACRES, MORE OR LESS, (AS DESCRIBED).

VERIZON WIRELESS FIBER EASEMENT DESCRIPTION:

A 10 FOOT WIDE FIBER EASEMENT FOR THE PURPOSE OF INSTALLING UNDERGROUND UTILITIES, BEING 5 FEET ON EACH SIDE OF THE FOLLOWING DESCRIBED CENTERLINE:

BEGINNING AT A POINT ON THE SOUTHEASTERLY LINE OF THE VERIZON WIRELESS LEASE AREA, SAID POINT BEING SOUTH 89°48'19" WEST 606.15 FEET ALONG SECTION LINE AND NORTH 196.69 FEET FROM THE SOUTH QUARTER CORNER OF SECTION 24, TOWNSHIP 4 SOUTH, RANGE 1 EAST, SALT LAKE BASE AND MERIDIAN AND RUNNING THENCE SOUTH 59°27'43" EAST 8.85 FEET; THENCE ALONG A 1511.02 FOOT RADIUS NON–TANGENT CURVE TO THE RIGHT 428.83 FEET, (CHORD BEARS SOUTH 23°43'37" WEST 427.39 FEET), MORE OR LESS, TO NORTH RIGHT–OF–WAY LINE OF CANYON CREST ROAD AND TERMINATING.

CONTAINS: 0.100 ACRES, MORE OR LESS, (AS DESCRIBED).

NARRATIVE:

(1) THE PURPOSE OF THIS SURVEY IS TO LOCATE AND SURVEY A PROPOSED COMMUNICATIONS TOWER SITE.

(2) THE BASIS OF BEARING USED FOR THIS SURVEY IS AS SHOWN ON THIS PLAT, FROM FOUND MONUMENTS AS LOCATED IN THE FIELD.
(M) = MEASURED BEARING OR DISTANCE.
(R)= RECORDED BEARING OR DISTANCE.
(CALC)= CALCULATED BEARING OR DISTANCE.

(3) PARCEL LINES ARE SHOWN AS REFERENCE PER RECORD INFORMATION AND DOES NOT CONSTITUTE OR PURPORT TO BE A BOUNDARY SURVEY.

(4) REFERENCE PLATS:
(A) PLAT "A" AMENDED TWIN RIVERS ESTATES PRD SUBDIVISION, IN ENTRY NO. 15134:2003, ON JANUARY 31, 2003.
(B) ALPINE JUNIOR HIGH SUBDIVISION PLAT, IN ENTRY NO. 57356:2003, ON APRIL 15, 2003.

NORTH

verizon
9656 SOUTH PROSPERITY ROAD
WEST JORDAN, UTAH 84088

Technology Associates
UTAH MARKET OFFICE
7896 SOUTH HIGHLAND DRIVE, SUITE 200
COTTONWOOD HEIGHTS, UTAH 84121
CORPORATE OFFICE
3115 SOUTH MELROSE DRIVE, SUITE #110
CARLSBAD, CALIFORNIA 92010

SURVEY PREPARED BY:
SUPERIOR SURVEYING, LLC
PHONE: 801–230–8968
EMAIL: JERRY@SUPERIOR–SURVEYING.COM

DRAWN BY:	JERRY F
CHECKED BY:	JERRY F

REV	DATE	DESCRIPTION
0	03.04.2019	SITE SURVEY

PROFESSIONAL LAND SURVEYOR
03–04–19
No. 6436064
JERRY FLETCHER
STATE OF UTAH

PRO - DIGIOUS
SW SEC 24 & SE SEC 25, T4S, R1E
CANYON CREST ROAD AND PARKWAY DRIVE
ALPINE, UTAH 84004

SHEET TITLE
SITE SURVEY

SHEET NUMBER
SURV

SITE SURVEY | SCALE: 1" = 80'-0" | 1

EXISTING WATER VZW RRH
EXISTING STORM DRAIN VZW HYBRID/OVP
EXISTING SEWER VZW ANTENNAS
EXISTING TELCO/FIBER VZW FIBER INSTALL
EXISTING POWER VZW POWER INSTALL
EXISTING FENCING VZW UTILITY EASEMENT
EXISTING RIGHT-OF-WAY LINE VZW ACCESS/UTILITY EASEMENT
EXISTING PARCEL LINE VZW LEASE AREA

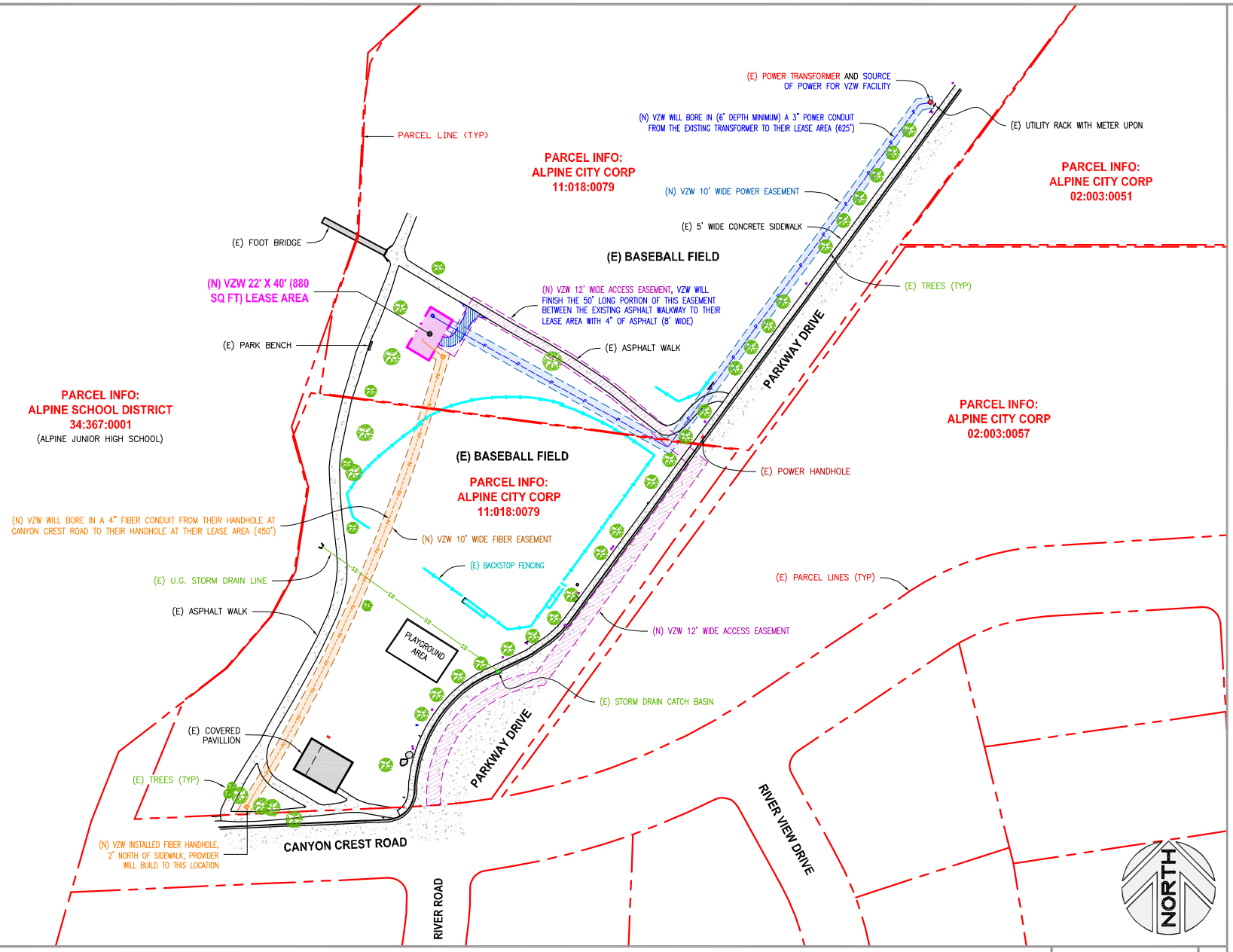

OVERALL SITE PLAN

SCALE: 1/4" = 20'-0"

1

verizon
9656 SOUTH PROSPERITY ROAD
WEST JORDAN, UTAH 84088

Technology Associates

UTAH MARKET OFFICE
7896 SOUTH HIGHLAND DRIVE, SUITE 200
COTTONWOOD HEIGHTS, UTAH 84121

CORPORATE OFFICE
3115 SOUTH MELROSE DRIVE, SUITE #110
CARLSBAD, CALIFORNIA 92010

DRAWN BY:	JAY C
CHECKED BY:	TROY B

REV	DATE	DESCRIPTION
0	04.23.2019	ZONING DRAWINGS

PRO - DIGIOUS
SW SEC 24 & SE SEC 25, T4S, R1E
CANYON CREST ROAD AND PARKWAY DRIVE
ALPINE, UTAH 84004

SHEET TITLE
OVERALL SITE PLAN

SHEET NUMBER
C100

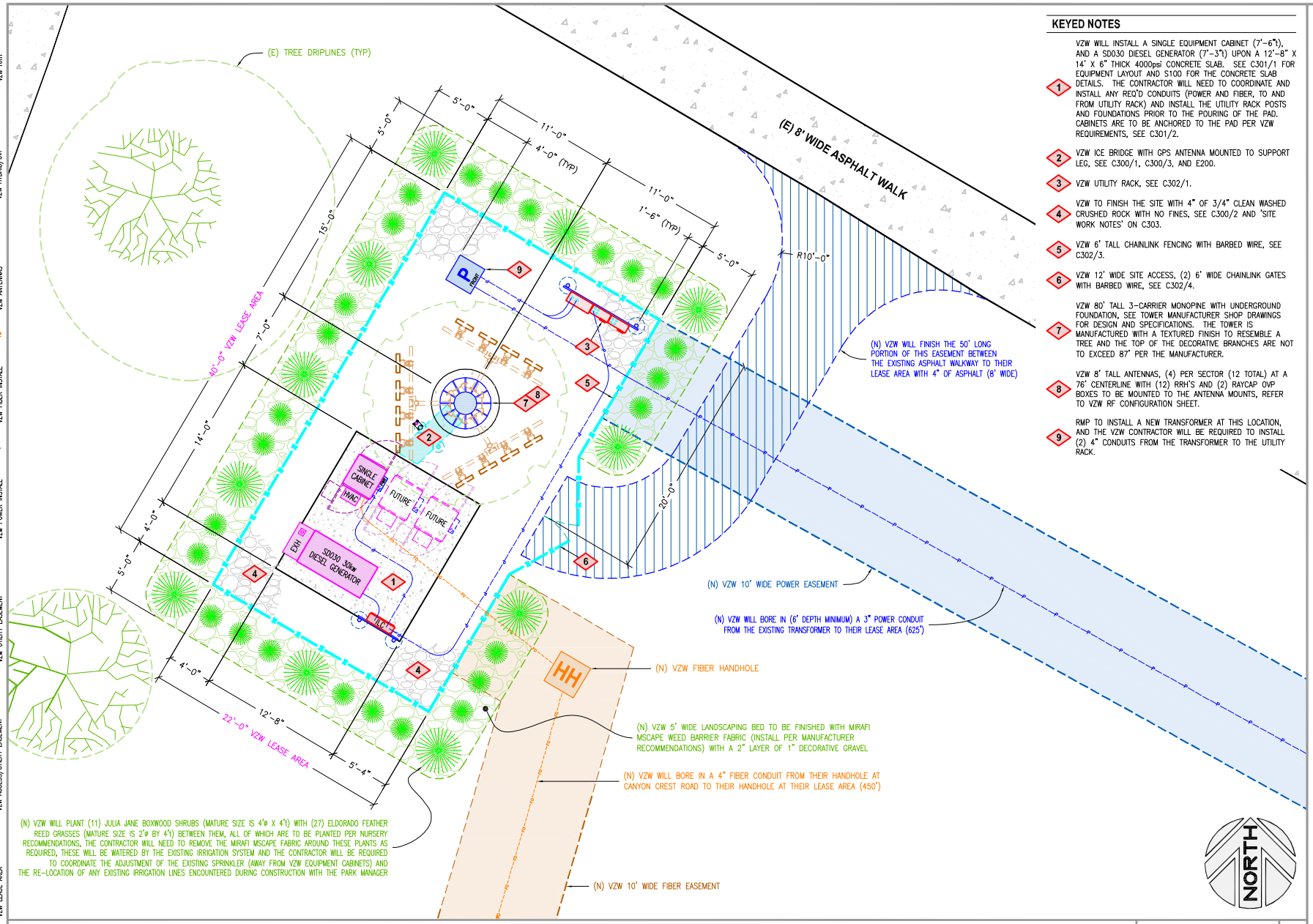

KEYED NOTES

1. VZW WILL INSTALL A SINGLE EQUIPMENT CABINET (7'-6"t), AND A SD030 DIESEL GENERATOR (7'-3"t) UPON A 12'-8" X 14' X 6" THICK 4000psi CONCRETE SLAB. SEE C301/1 FOR EQUIPMENT LAYOUT AND S100 FOR THE CONCRETE SLAB DETAILS. THE CONTRACTOR WILL NEED TO COORDINATE AND INSTALL ANY REQ'D CONDUITS (POWER AND FIBER, TO AND FROM UTILITY RACK) AND INSTALL THE UTILITY RACK POSTS AND FOUNDATIONS PRIOR TO THE POURING OF THE PAD. CABINETS ARE TO BE ANCHORED TO THE PAD PER VZW REQUIREMENTS, SEE C301/2.
2. VZW ICE BRIDGE WITH GPS ANTENNA MOUNTED TO SUPPORT LEG, SEE C300/1, C300/3, AND E200.
3. VZW UTILITY RACK, SEE C302/1.
4. VZW TO FINISH THE SITE WITH 4" OF 3/4" CLEAN WASHED CRUSHED ROCK WITH NO FINES, SEE C300/2 AND 'SITE WORK NOTES' ON C303.
5. VZW 6' TALL CHAINLINK FENCING WITH BARBED WIRE, SEE C302/3.
6. VZW 12' WIDE SITE ACCESS, (2) 6' WIDE CHAINLINK GATES WITH BARBED WIRE, SEE C302/4.
7. VZW 80' TALL 3-CARRIER MONOPINE WITH UNDERGROUND FOUNDATION, SEE TOWER MANUFACTURER SHOP DRAWINGS FOR DESIGN AND SPECIFICATIONS. THE TOWER IS MANUFACTURED WITH A TEXTURED FINISH TO RESEMBLE A TREE AND THE TOP OF THE DECORATIVE BRANCHES ARE NOT TO EXCEED 87' PER THE MANUFACTURER.
8. VZW 8' TALL ANTENNAS, (4) PER SECTOR (12 TOTAL) AT A 76' CENTERLINE WITH (12) RRH'S AND (2) RAYCAP OVP BOXES TO BE MOUNTED TO THE ANTENNA MOUNTS, REFER TO VZW RF CONFIGURATION SHEET.
9. RMP TO INSTALL A NEW TRANSFORMER AT THIS LOCATION, AND THE VZW CONTRACTOR WILL BE REQUIRED TO INSTALL (2) 4" CONDUITS FROM THE TRANSFORMER TO THE UTILITY RACK.

EXISTING WATER / VZW RRH
EXISTING STORM DRAIN / VZW HYBRID/OVP
EXISTING SEWER / VZW ANTENNAS
EXISTING TELCO/FIBER / VZW FIBER INSTALL
EXISTING POWER / VZW POWER INSTALL
EXISTING FENCING / VZW UTILITY EASEMENT
EXISTING RIGHT-OF-WAY LINE / VZW ACCESS/UTILITY EASEMENT
EXISTING PARCEL LINE / VZW LEASE AREA

ENLARGED SITE PLAN | **SCALE: 1/8" = 1'-0"** | 1

verizon
9656 SOUTH PROSPERITY ROAD
WEST JORDAN, UTAH 84088

Technology Associates
UTAH MARKET OFFICE
7896 SOUTH HIGHLAND DRIVE, SUITE 200
COTTONWOOD HEIGHTS, UTAH 84121
CORPORATE OFFICE
3115 SOUTH MELROSE DRIVE, SUITE #110
CARLSBAD, CALIFORNIA 92010

DRAWN BY:	JAY C
CHECKED BY:	TROY B

REV	DATE	DESCRIPTION
0	04.23.2019	ZONING DRAWINGS

PRO - DIGIOUS
SW SEC 24 & SE SEC 25, T4S, R1E
CANYON CREST ROAD AND PARKWAY DRIVE
ALPINE, UTAH 84004

SHEET TITLE
ENLARGED SITE PLAN

SHEET NUMBER
C101

EXISTING WATER — VZW RRH
EXISTING STORM DRAIN — VZW HYBRID/OVP
EXISTING SEWER — VZW ANTENNAS
EXISTING TELCO/FIBER — VZW FIBER INSTALL
EXISTING POWER — VZW POWER INSTALL
EXISTING FENCING — VZW UTILITY EASEMENT
EXISTING RIGHT-OF-WAY LINE — VZW ACCESS/UTILITY EASEMENT
EXISTING PARCEL LINE — VZW LEASE AREA

KEYED NOTES – SEE C101 FOR EXPANDED VERSION

1. VZW WILL INSTALL A SINGLE EQUIPMENT CABINET (7'–6"t), AND A SD030 DIESEL GENERATOR (7'–3"t) UPON A 12'–8" X 14' X 6" THICK 4000psi CONCRETE SLAB.
2. VZW 6' TALL CHAINLINK FENCING WITH BARBED WIRE, SEE C302/3.
3. VZW 12' WIDE SITE ACCESS, (2) 6' WIDE CHAINLINK GATES WITH BARBED WIRE, SEE C302/4.
4. VZW 80' TALL 3–CARRIER MONOPINE WITH UNDERGROUND FOUNDATION, SEE TOWER MANUFACTURER SHOP DRAWINGS FOR DESIGN AND SPECIFICATIONS. THE TOWER IS MANUFACTURED WITH A TEXTURED FINISH TO RESEMBLE A TREE AND THE TOP OF THE DECORATIVE BRANCHES ARE NOT TO EXCEED 87' PER THE MANUFACTURER.
5. VZW 8' TALL ANTENNAS, (4) PER SECTOR (12 TOTAL) AT A 76' CENTERLINE WITH (12) RRH'S AND (2) RAYCAP OVP BOXES TO BE MOUNTED TO THE ANTENNA MOUNTS, REFER TO VZW RF CONFIGURATION SHEET.

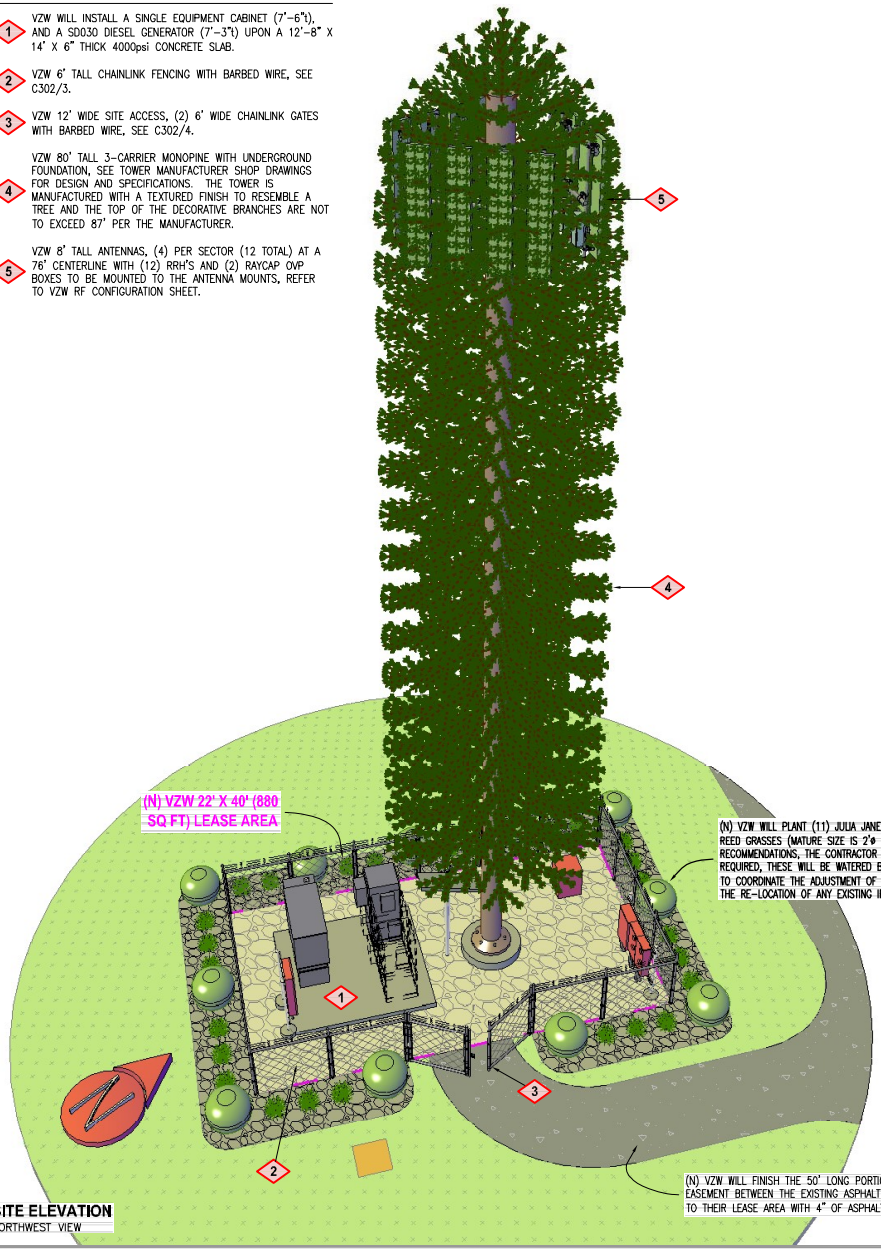

(N) VZW WILL PLANT (11) JULIA JANE BOXWOOD SHRUBS (MATURE SIZE IS 4'ø X 4't) WITH (27) ELDORADO FEATHER REED GRASSES (MATURE SIZE IS 2'ø BY 4't) BETWEEN THEM, ALL OF WHICH ARE TO BE PLANTED PER NURSERY RECOMMENDATIONS, THE CONTRACTOR WILL NEED TO REMOVE THE MIRAFI MSCAPE FABRIC AROUND THESE PLANTS AS REQUIRED, THESE WILL BE WATERED BY THE EXISTING IRRIGATION SYSTEM AND THE CONTRACTOR WILL BE REQUIRED TO COORDINATE THE ADJUSTMENT OF THE EXISTING SPRINKLER (AWAY FROM VZW EQUIPMENT CABINETS) AND THE RE–LOCATION OF ANY EXISTING IRRIGATION LINES ENCOUNTERED DURING CONSTRUCTION WITH THE PARK MANAGER

(N) VZW WILL FINISH THE 50' LONG PORTION OF THIS EASEMENT BETWEEN THE EXISTING ASPHALT WALKWAY TO THEIR LEASE AREA WITH 4" OF ASPHALT (8' WIDE)

SITE ELEVATION
NORTHWEST VIEW

SITE ELEVATION
LOOKING NORTH

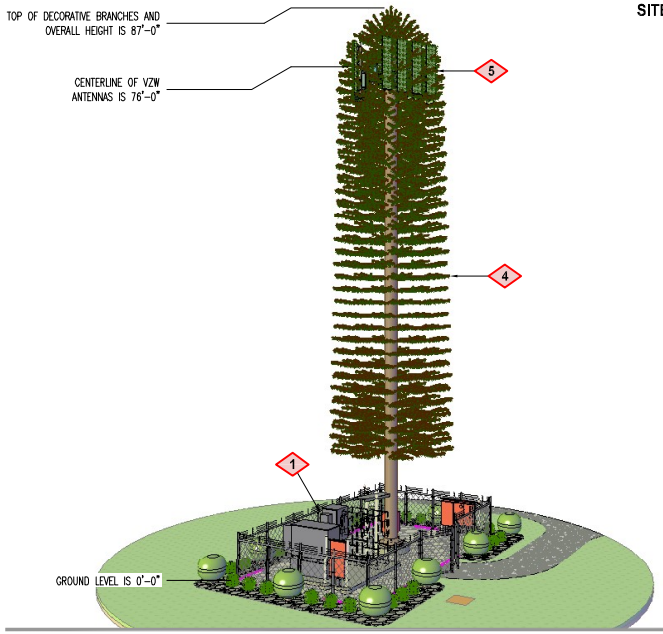

SITE ELEVATION
LOOKING WEST

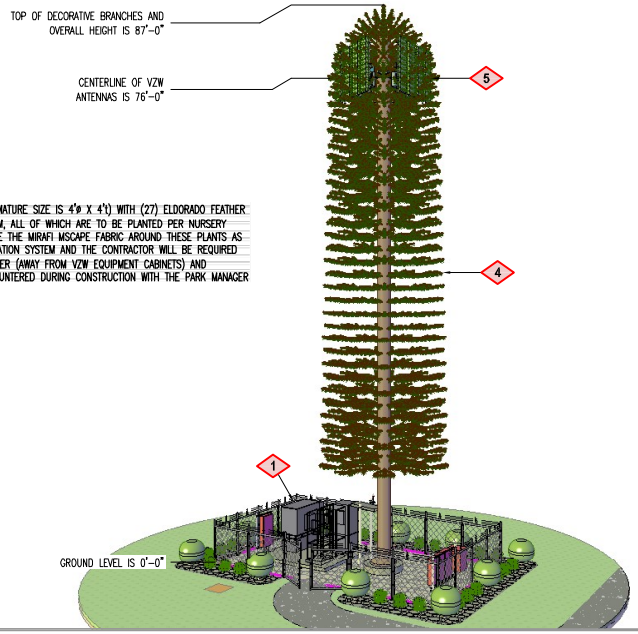

verizon
9656 SOUTH PROSPERITY ROAD
WEST JORDAN, UTAH 84088

Technology Associates

UTAH MARKET OFFICE
7896 SOUTH HIGHLAND DRIVE, SUITE 200
COTTONWOOD HEIGHTS, UTAH 84121

CORPORATE OFFICE
3115 SOUTH MELROSE DRIVE, SUITE #110
CARLSBAD, CALIFORNIA 92010

DRAWN BY:	JAY C
CHECKED BY:	TROY B

REV	DATE	DESCRIPTION
0	04.23.2019	ZONING DRAWINGS

PRO - DIGIOUS
SW SEC 24 & SE SEC 25, T4S, R1E
CANYON CREST ROAD AND PARKWAY DRIVE
ALPINE, UTAH 84004

SHEET TITLE
SITE ELEVATIONS

SHEET NUMBER
C200

verizon

Confidential and proprietary materials for authorized Verizon personnel and outside agencies only. Use, disclosure or distribution of this material is not permitted to any unauthorized persons or third parties except by written agreement.

Proposed
Site Location

ALPINE PLANNING COMMISSION AGENDA

SUBJECT: Public Hearing – Site Plan – Antenna Upgrade at Beck's Hill

FOR CONSIDERATION ON: 18 June 2019

PETITIONER: T-Mobile

ACTION REQUESTED BY PETITIONER: Review and recommend approval of the proposed antenna upgrade.

BACKGROUND INFORMATION:
T-Mobile is seeking to upgrade three antennas, three Remote Radio Heads, and install one hybrid cable. Proposed upgrade is on an existing wireless telecommunications facility at Beck's Hill.

Article 3.27.030 states:

State or local government may not deny, and shall approve, any eligible facilities request for a modification of an existing wireless tower or base station that does not substantially change the physical dimensions of such tower or base station. For purposes of this Part, the term ''eligible facilities request'' means any request for modification of an existing wireless tower or base station that involves:

- *collocation of new transmission equipment;*
- *removal of transmission equipment; or*
- *replacement of transmission equipment.*

Proposed upgrades do not substantially change the physical dimensions of the tower or base station.

T-Mobile

T-MOBILE SITE NUMBER: SL01122A
T-MOBILE SITE NAME: ALPINE_SHEPHERD_HILL
SITE TYPE: MONOPOLE
TOWER HEIGHT: 22'-0"

BUSINESS UNIT #: 822343
SITE ADDRESS: 651 S BATEMAN ALPINE, UT 84004
COUNTY: UTAH
JURISDICTION: CITY OF ALPINE, UT

T-MOBILE L600 PROJECT

SITE INFORMATION

CROWN CASTLE USA INC. SITE NAME:	ALPINE_SHEPHERD_HILL
SITE ADDRESS:	651 S BATEMAN ALPINE, UT 84004
COUNTY:	UTAH
MAP/PARCEL #:	11-023-0117
AREA OF CONSTRUCTION:	EXISTING
LATITUDE:	40° 26' 39.30"
LONGITUDE:	-111° 46' 46.30"
LAT/LONG TYPE:	NAD83
GROUND ELEVATION:	5,000 FT
CURRENT ZONING:	----
JURISDICTION:	CITY OF ALPINE, UT
OCCUPANCY CLASSIFICATION:	U
TYPE OF CONSTRUCTION:	IIB
A.D.A. COMPLIANCE:	FACILITY IS UNMANNED AND NOT FOR HUMAN HABITATION
PROPERTY OWNER:	CLYDE SHEPHERD
TOWER OWNER:	CROWN CASTLE USA INC 116 INVERNESS DR. EAST STE# 280 ENGLEWOOD, CO 80112
APPLICANT/CARRIER:	T-MOBILE 121 W. ELECTION RD., SUITE 330 DRAPER, UT 84020
CROWN CASTLE USA INC. APPLICATION ID:	489718
ELECTRIC PROVIDER:	ROCKY MOUNTAIN POWER (866) 870-3419
TELCO PROVIDER:	CENTURYLINK (800) 244-1111

PROJECT TEAM

DESIGNER FIRM:	BROADUS SERVICES 4 COUNTRY PLACE CIRCLE DALWORTHINGTON GARDENS, TX 76016 PH: (817) 349-3449
ENGINEER FIRM:	JACOB GORALSKI, PLLC 1106 COLBI ST. KENNEDALE, TX 76060 PH: (817) 456-2621 CONTACT: JACOB GORALSKI, PLLC
CROWN CASTLE CONTACTS:	116 INVERNESS DR. EAST STE# 280 ENGLEWOOD, CO 80112 TALISSA FUGATE - PROJECT MANAGER TALISSA.FUGATE@CROWNCASTLE.COM (602) 845-1719 NATHAN STRONG - CONSTRUCTION MANAGER NATHAN.STRONG.CONTRACTOR@CROWNCASTLE.COM (801) 376-2448 NICK CHAPMAN - A&E SPECIALIST NICHOLAS.CHAPMAN@CROWNCASTLE.COM (480) 734-2434
T-MOBILE CONTACTS :	BLAKE HANSON BLAKE@RAGEDEVELOPMENT.COM

DRAWING INDEX

SHEET #	SHEET DESCRIPTION
T-1	TITLE SHEET
T-2	GENERAL NOTES
C-1.1	SITE PLAN
C-1.2	EXISTING AND FINAL EQUIPMENT LAYOUTS
C-2	EXISTING AND FINAL ELEVATIONS
C-3	ANTENNA PLAN AND SCHEDULE
C-4	ANTENNA SPECIFICATIONS
C-5	EQUIPMENT SPECIFICATIONS
C-6	ANTENNA CONFIGURATION KEY
C-7	EQUIPMENT CONFIGURATION KEY
G-1	ANTENNA AND UTILITY FRAME GROUNDING DETAILS
G-2	GROUNDING DETAILS
G-3	GROUNDING DETAILS

ALL DRAWINGS CONTAINED HEREIN ARE FORMATTED FOR 11X17. CONTRACTOR SHALL VERIFY ALL PLANS AND EXISTING DIMENSIONS AND CONDITIONS ON THE JOB SITE AND SHALL IMMEDIATELY NOTIFY THE ENGINEER IN WRITING OF ANY DISCREPANCIES BEFORE PROCEEDING WITH THE WORK OR BE RESPONSIBLE FOR SAME.

PROJECT DESCRIPTION

THE PURPOSE OF THIS PROJECT IS TO ENHANCE BROADBAND CONNECTIVITY AND CAPACITY TO THE EXISTING ELIGIBLE WIRELESS FACILITY.

TOWER
- REMOVE (3) ANTENNAS
- REMOVE (3) RRUs
- INSTALL (3) ANTENNAS
- INSTALL (3) RRUs
- INSTALL (1) HYBRID CABLE

GROUND
- NO CHANGE

DESIGN PACKAGE BASED ON THE APPLICATION
ID: 489718
REVISION: 0

NOTES:
PRIOR TO ACCESSING/ENTERING THE SITE YOU MUST CONTACT THE CROWN NOC AT 800-788-7011 & CROWN CONSTRUCTION MANAGER

CALL UTAH ONE CALL
(800) 662-4111
CALL 3 WORKING DAYS
BEFORE YOU DIG!

LOCATION MAP

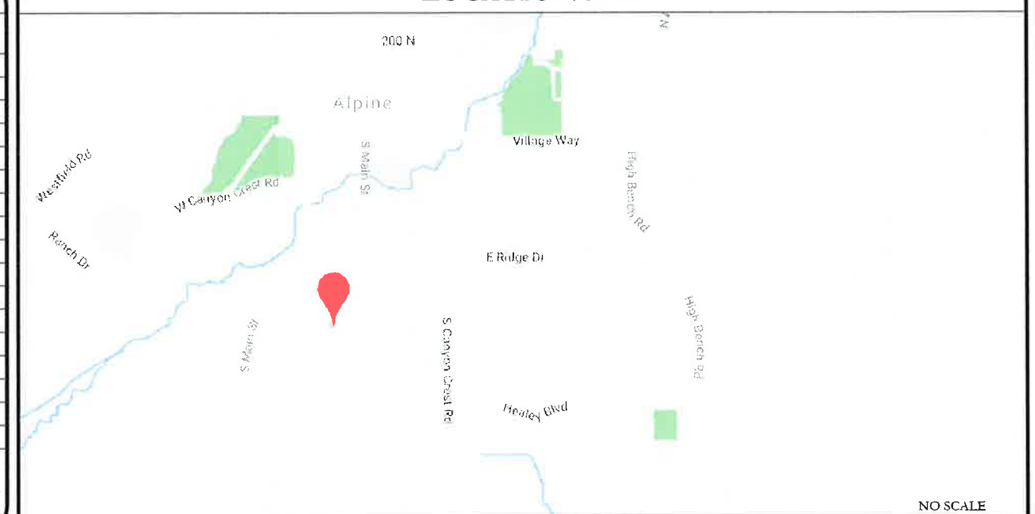

NO SCALE

DRIVING DIRECTIONS FROM T-MOBILE LOCAL OFFICE (121 W. ELECTION RD. DRAPER, UT 84020) HEAD WEST TOWARD S ELECTION RD. TURN RIGHT TOWARD S ELECTION RD. TURN LEFT ONTO S ELECTION RD. TURN LEFT ONTO LONE PEAK PKWY. USE THE 2ND FROM THE LEFT LANE TO TURN LEFT ONTO W 12300 S. SLIGHT RIGHT TO MERGE ONTO I-15 S TOWARD PROVO. TAKE EXIT 284 TOWARD HIGHLAND ALPINE. KEEP LEFT, FOLLOW SIGNS FOR UT-92 AND MERGE ONTO UT-92 E. SLIGHT RIGHT ONTO UT-92/TIMPANOGOS HWY COMMUTER LN. CONTINUE TO FOLLOW UT-92. TURN LEFT ONTO 5300 W. CONTINUE ONTO UT-74 N/S MAIN ST. TURN RIGHT ONTO SUNSET DR. TURN LEFT ONTO BATEMAN LN.

APPLICABLE CODES/REFERENCE DOCUMENTS

ALL WORK SHALL BE PERFORMED AND MATERIALS INSTALLED IN ACCORDANCE WITH THE CURRENT EDITIONS OF THE FOLLOWING CODES AS ADOPTED BY THE LOCAL GOVERNING AUTHORITIES. NOTHING IN THESE PLANS IS TO BE CONSTRUED TO PERMIT WORK NOT CONFORMING TO THESE CODES:

CODE TYPE	CODE
BUILDING	2015 IBC
ELECTRICAL	2017 NEC

REFERENCE DOCUMENTS:
STRUCTURAL ANALYSIS: BY OTHERS

MOUNT ANALYSIS: BY OTHERS

SITE PHOTO:

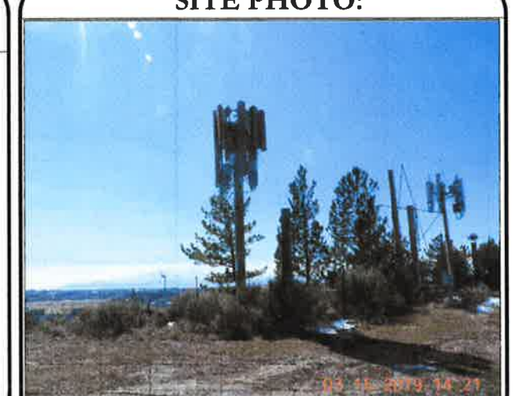

T-Mobile
12920 SE 38TH STREET
BELLEVUE, WA 98006

BROADUS services
4 COUNTRY PLACE CIRCLE
DALWORTHINGTON GARDENS
TEXAS 76016
OFFICE: (817) 349 3449
FAX: 800 401 4234

T-MOBILE SITE NUMBER:
SL01122A
BU #: **822343**
ALPINE_SHEPHERD_HILL

651 S. BATEMAN
ALPINE, UT 84004

EXISTING 22'-0" MONOPOLE

ISSUED FOR:

REV	DATE	DRWN	DESCRIPTION	DES./QA
0	05/01/2019	WHS	FINAL	ELG

PROFESSIONAL ENGINEER
No. 9226401-2202
JACOB GORALSKI
STATE OF UTAH

5/9/2019

JACOB GORALSKI, PLLC
CONSULTING ENGINEER
JACOB GORALSKI, PLLC
UT PE# 9226401-2202
1106 COLBI ST.
KENNEDALE, TX 76060
(817) 456-2621

IT IS A VIOLATION OF LAW FOR ANY PERSON, UNLESS THEY ARE ACTING UNDER THE DIRECTION OF A LICENSED PROFESSIONAL ENGINEER, TO ALTER THIS DOCUMENT.

SHEET NUMBER: T-1
REVISION: 0

SITE WORK GENERAL NOTES:

1. THE SUBCONTRACTOR SHALL CONTACT UTILITY LOCATING SERVICES PRIOR TO THE START OF CONSTRUCTION.
2. ALL EXISTING ACTIVE SEWER, WATER, GAS, ELECTRIC AND OTHER UTILITIES WHERE ENCOUNTERED IN THE WORK, SHALL BE PROTECTED AT ALL TIMES AND WHERE REQUIRED FOR THE PROPER EXECUTION OF THE WORK, SHALL BE RELOCATED AS DIRECTED BY CONTRACTOR. EXTREME CAUTION SHOULD BE USED BY THE SUBCONTRACTOR WHEN EXCAVATING OR DRILLING PIERS AROUND OR NEAR UTILITIES. SUBCONTRACTOR SHALL PROVIDE SAFETY TRAINING FOR THE WORKING CREW. THIS WILL INCLUDE BUT NOT BE LIMITED TO A) FALL PROTECTION B) CONFINED SPACE C) ELECTRICAL SAFETY D) TRENCHING AND EXCAVATION.
3. ALL SITE WORK TO COMPLY WITH QAS-STD-10068 "INSTALLATION STANDARDS FOR CONSTRUCTION ACTIVITIES ON CROWN CASTLE USA INC. TOWER SITE" AND LATEST VERSION OF TIA 1019 "STANDARD FOR INSTALLATION, ALTERATION, AND MAINTENANCE OF ANTENNA SUPPORTING STRUCTURES AND ANTENNAS."
4. ALL SITE WORK SHALL BE AS INDICATED ON THE STAMPED CONSTRUCTION DRAWINGS AND PROJECT SPECIFICATIONS.
5. IF NECESSARY, RUBBISH, STUMPS, DEBRIS, STICKS, STONES AND OTHER REFUSE SHALL BE REMOVED FROM THE SITE AND DISPOSED OF LEGALLY.
6. ALL EXISTING INACTIVE SEWER, WATER, GAS, ELECTRIC AND OTHER UTILITIES, WHICH INTERFERE WITH THE EXECUTION OF THE WORK, SHALL BE REMOVED AND/OR CAPPED, PLUGGED OR OTHERWISE DISCONTINUED AT POINTS WHICH WILL NOT INTERFERE WITH THE EXECUTION OF THE WORK, SUBJECT TO THE APPROVAL OF CONTRACTOR, OWNER AND/OR LOCAL UTILITIES.
7. THE SUBCONTRACTOR SHALL PROVIDE SITE SIGNAGE IN ACCORDANCE WITH THE TECHNICAL SPECIFICATION FOR SITE SIGNAGE.
8. THE SITE SHALL BE GRADED TO CAUSE SURFACE WATER TO FLOW AWAY FROM THE BTS EQUIPMENT AND TOWER AREAS.
9. NO FILL OR EMBANKMENT MATERIAL SHALL BE PLACED ON FROZEN GROUND. FROZEN MATERIALS, SNOW OR ICE SHALL NOT BE PLACED IN ANY FILL OR EMBANKMENT.
10. THE SUB GRADE SHALL BE COMPACTED AND BROUGHT TO A SMOOTH UNIFORM GRADE PRIOR TO FINISHED SURFACE APPLICATION.
11. THE AREAS OF THE OWNERS PROPERTY DISTURBED BY THE WORK AND NOT COVERED BY THE TOWER, EQUIPMENT OR DRIVEWAY, SHALL BE GRADED TO A UNIFORM SLOPE, AND STABILIZED TO PREVENT EROSION AS SPECIFIED ON THE PROJECT SPECIFICATIONS.
12. SUBCONTRACTOR SHALL MINIMIZE DISTURBANCE TO EXISTING SITE DURING CONSTRUCTION. EROSION CONTROL MEASURES, IF REQUIRED DURING CONSTRUCTION, SHALL BE IN CONFORMANCE WITH THE LOCAL GUIDELINES FOR EROSION AND SEDIMENT CONTROL.
13. NOTICE TO PROCEED– NO WORK TO COMMENCE PRIOR TO COMPANY'S WRITTEN NOTICE TO PROCEED AND THE ISSUANCE OF A PURCHASE ORDER.
14. ALL CONSTRUCTION MEANS AND METHODS; INCLUDING BUT NOT LIMITED TO, ERECTION PLANS, RIGGING PLANS, CLIMBING PLANS, AND RESCUE PLANS SHALL BE THE RESPONSIBILITY OF THE GENERAL CONTRACTOR RESPONSIBLE FOR THE EXECUTION OF THE WORK CONTAINED HEREIN AND SHALL MEET ANSI/ASSE A10.48 (LATEST EDITION); FEDERAL, STATE, AND LOCAL REGULATIONS; AND ANY APPLICABLE INDUSTRY CONSENSUS STANDARDS RELATED TO THE CONSTRUCTION ACTIVITIES BEING PERFORMED. ALL RIGGING PLANS SHALL ADHERE TO ANSI/ASSE A10.48 (LATEST EDITION) AND CROWN STANDARD CED-STD-10253 INCLUDING THE REQUIRED INVOLVEMENT OF A QUALIFIED ENGINEER FOR CLASS IV CONSTRUCTION TO CERTIFY THE SUPPORTING STRUCTURE(S) IN ACCORDANCE WITH THE ANSI/TIA-322 (LATEST EDITION).

STRUCTURAL STEEL NOTES:

1. ALL STEEL WORK SHALL BE PAINTED IN ACCORDANCE WITH THE PROJECT SPECIFICATIONS AND IN ACCORDANCE WITH ASTM A36 UNLESS OTHERWISE NOTED.
2. BOLTED CONNECTIONS SHALL BE ASTM A325 BEARING TYPE (3/4"ø) CONNECTIONS AND SHALL HAVE MINIMUM OF TWO BOLTS UNLESS NOTED OTHERWISE.
3. NON-STRUCTURAL CONNECTIONS FOR STEEL GRATING MAY USE 5/8"ø ASTM A307 BOLTS UNLESS NOTED OTHERWISE.
4. INSTALLATION OF CONCRETE EXPANSION/WEDGE ANCHOR, SHALL BE PER MANUFACTURER'S RECOMMENDED PROCEDURE. THE ANCHOR BOLT, DOWEL OR ROD SHALL CONFORM TO MANUFACTURER'S RECOMMENDATION FOR EMBEDMENT DEPTH OR AS SHOWN ON THE DRAWINGS. NO REBAR SHALL BE CUT WITHOUT PRIOR CONTRACTOR APPROVAL WHEN DRILLING HOLES IN CONCRETE. SPECIAL INSPECTIONS, REQUIRED BY GOVERNING CODES, SHALL BE PERFORMED IN ORDER TO MAINTAIN MANUFACTURER'S MAXIMUM ALLOWABLE LOADS.

CONCRETE AND REINFORCING STEEL NOTES:

1. ALL CONCRETE WORK SHALL BE IN ACCORDANCE WITH THE ACI 301, ACI 318, ACI 336, ASTM A184, ASTM A185 AND THE DESIGN AND CONSTRUCTION SPECIFICATION FOR CAST-IN-PLACE CONCRETE.
2. ALL CONCRETE SHALL HAVE A MINIMUM COMPRESSIVE STRENGTH OF 3000 PSI AT 28 DAYS, UNLESS NOTED OTHERWISE. SLAB FOUNDATION DESIGN ASSUMING ALLOWABLE SOIL BEARING PRESSURE OF 2000 PSF.
3. REINFORCING STEEL SHALL CONFORM TO ASTM A615, GRADE 60, DEFORMED UNLESS NOTED OTHERWISE. WELDED WIRE FABRIC SHALL CONFORM TO ASTM A185 WELDED STEEL WIRE FABRIC UNLESS NOTED OTHERWISE. SPLICES SHALL BE CLASS "B" AND ALL HOOKS SHALL BE STANDARD, UNO.
4. THE FOLLOWING MINIMUM CONCRETE COVER SHALL BE PROVIDED FOR REINFORCING STEEL UNLESS SHOWN OTHERWISE ON DRAWINGS:

   CONCRETE CAST AGAINST EARTH.....3 IN.
   CONCRETE EXPOSED TO EARTH OR WEATHER:
   #6 AND LARGER.....2 IN.
   #5 AND SMALLER & WWF.....1 1/2 IN.
   CONCRETE NOT EXPOSED TO EARTH OR WEATHER OR NOT CAST AGAINST THE GROUND:
   SLAB AND WALLS.....3/4 IN.
   BEAMS AND COLUMNS.....1 1/2 IN.

5. A CHAMFER 3/4" SHALL BE PROVIDED AT ALL EXPOSED EDGES OF CONCRETE, UNLESS NOTED OTHERWISE. IN ACCORDANCE WITH ACI 301 SECTION 4.2.4.

MASONRY NOTES:

1. HOLLOW CONCRETE MASONRY UNITS SHALL MEET A.S.T.M. SPECIFICATION C90, GRADE N. TYPE 1. THE SPECIFIED DESIGN COMPRESSIVE STRENGTH OF CONCRETE MASONRY (F'm) SHALL BE 1500 PSI.
2. MORTAR SHALL MEET THE PROPERTY SPECIFICATION OF A.S.T.M. C270 TYP. "S" MORTAR AND SHALL HAVE A MINIMUM COMPRESSIVE STRENGTH OF 2000 PSI.
3. GROUT SHALL MEET A.S.T.M. SPECIFICATION C475 AND HAVE A MINIMUM 28 DAY COMPRESSIVE STRENGTH OF 2000 PSI.
4. CONCRETE MASONRY SHALL BE LAID IN RUNNING (COMMON) BOND.
5. WALL SHALL RECEIVE TEMPORARY BRACING. TEMPORARY BRACING SHALL NOT BE REMOVED UNTIL GROUT IS FULLY CURED.

GENERAL NOTES:

1. FOR THE PURPOSE OF CONSTRUCTION DRAWING, THE FOLLOWING DEFINITIONS SHALL APPLY:

CONTRACTOR–	
SUBCONTRACTOR–	GENERAL CONTRACTOR (CONSTRUCTION)
CARRIER–	T-MOBILE
TOWER OWNER–	CROWN CASTLE USA INC.
OEM–	ORIGINAL EQUIPMENT MANUFACTURER

2. PRIOR TO THE SUBMISSION OF BIDS, THE BIDDING SUBCONTRACTOR SHALL VISIT THE CELL SITE TO FAMILIARIZE WITH THE EXISTING CONDITIONS AND TO CONFIRM THAT THE WORK CAN BE ACCOMPLISHED AS SHOWN ON THE CONSTRUCTION DRAWINGS. ANY DISCREPANCY FOUND SHALL BE BROUGHT TO THE ATTENTION OF CONTRACTOR AND CROWN CASTLE USA INC.
3. ALL MATERIALS FURNISHED AND INSTALLED SHALL BE IN STRICT ACCORDANCE WITH ALL APPLICABLE CODES, REGULATIONS AND ORDINANCES. SUBCONTRACTOR SHALL ISSUE ALL APPROPRIATE NOTICES AND COMPLY WITH ALL LAWS, ORDINANCES, RULES, REGULATIONS AND LAWFUL ORDERS OF ANY PUBLIC AUTHORITY REGARDING THE PERFORMANCE OF THE WORK. ALL WORK CARRIED OUT SHALL COMPLY WITH ALL APPLICABLE MUNICIPAL AND UTILITY COMPANY SPECIFICATIONS AND LOCAL JURISDICTIONAL CODES, ORDINANCES AND APPLICABLE REGULATIONS.
4. DRAWINGS PROVIDED HERE ARE NOT TO SCALE AND ARE INTENDED TO SHOW OUTLINE ONLY.
5. UNLESS NOTED OTHERWISE, THE WORK SHALL INCLUDE FURNISHING MATERIALS, EQUIPMENT, APPURTENANCES AND LABOR NECESSARY TO COMPLETE ALL INSTALLATIONS AS INDICATED ON THE DRAWINGS.
6. "KITTING LIST" SUPPLIED WITH THE BID PACKAGE IDENTIFIES ITEMS THAT WILL BE SUPPLIED BY CONTRACTOR. ITEMS NOT INCLUDED IN THE BILL OF MATERIALS AND KITTING LIST SHALL BE SUPPLIED BY THE SUBCONTRACTOR.
7. THE SUBCONTRACTOR SHALL INSTALL ALL EQUIPMENT AND MATERIALS IN ACCORDANCE WITH MANUFACTURER'S RECOMMENDATIONS UNLESS SPECIFICALLY STATED OTHERWISE.
8. IF THE SPECIFIED EQUIPMENT CAN NOT BE INSTALLED AS SHOWN ON THESE DRAWINGS, THE SUBCONTRACTOR SHALL PROPOSE AN ALTERNATIVE INSTALLATION FOR APPROVAL BY THE CONTRACTOR AND CROWN CASTLE USA INC. PRIOR TO PROCEEDING WITH ANY SUCH CHANGE OF INSTALLATION.
9. SUBCONTRACTOR SHALL DETERMINE ACTUAL ROUTING OF CONDUIT, POWER AND T1 CABLES, GROUNDING CABLES AS SHOWN ON THE POWER, GROUNDING AND TELCO PLAN DRAWINGS.
10. THE SUBCONTRACTOR SHALL PROTECT EXISTING IMPROVEMENTS, PAVEMENTS, CURBS, LANDSCAPING AND STRUCTURES. ANY DAMAGED PART SHALL BE REPAIRED AT SUBCONTRACTOR'S EXPENSE TO THE SATISFACTION OF OWNER.
11. SUBCONTRACTOR SHALL LEGALLY AND PROPERLY DISPOSE OF ALL SCRAP MATERIALS SUCH AS COAXIAL CABLES AND OTHER ITEMS REMOVED FROM THE EXISTING FACILITY. ANTENNAS REMOVED SHALL BE RETURNED TO THE OWNER'S DESIGNATED LOCATION.
12. SUBCONTRACTOR SHALL LEAVE PREMISES IN CLEAN CONDITION. TRASH AND DEBRIS SHOULD BE REMOVED FROM SITE ON A DAILY BASIS.

ABBREVIATIONS AND SYMBOLS:

ABBREVIATIONS:

AGL	ABOVE GRADE LEVEL
BTS	BASE TRANSCEIVER STATION
(E)	EXISTING
MIN.	MINIMUM
REF	REFERENCE
RF	RADIO FREQUENCY
T.B.D.	TO BE DETERMINED
T.B.R.	TO BE RESOLVED
TYP	TYPICAL
REQ	REQUIRED
EGR	EQUIPMENT GROUND RING
AWG	AMERICAN WIRE GAUGE
MGB	MASTER GROUND BAR
EG	EQUIPMENT GROUND
BCW	BARE COPPER WIRE
SIAD	SMART INTEGRATED ACCESS DEVICE
GEN	GENERATOR
IGR	INTERIOR GROUND RING (HALO)
RBS	RADIO BASE STATION

SYMBOLS:

SBG	SOLID GROUND BUS BAR
SBN	SOLID NEUTRAL BUS BAR
	SUPPLEMENTAL GROUND CONDUCTOR
	2-POLE THERMAL-MAGNETIC CIRCUIT BREAKER
	SINGLE-POLE THERMAL-MAGNETIC CIRCUIT BREAKER
	CHEMICAL GROUND ROD
	TEST WELL
	DISCONNECT SWITCH
M	METER
	EXOTHERMIC WELD (CADWELD) (UNLESS OTHERWISE NOTED)
	MECHANICAL CONNECTION
	GROUNDING WIRE

ELECTRICAL INSTALLATION NOTES:

1. ALL ELECTRICAL WORK SHALL BE PERFORMED IN ACCORDANCE WITH THE PROJECT SPECIFICATIONS, NEC AND ALL APPLICABLE FEDERAL, STATE, AND LOCAL CODES/ORDINANCES.
2. CONDUIT ROUTINGS ARE SCHEMATIC. SUBCONTRACTOR SHALL INSTALL CONDUITS SO THAT ACCESS TO EQUIPMENT IS NOT BLOCKED AND TRIP HAZARDS ARE ELIMINATED.
3. WIRING, RACEWAY AND SUPPORT METHODS AND MATERIALS SHALL COMPLY WITH THE REQUIREMENTS OF THE NEC. HILTI EPOXY ANCHORS ARE REQUIRED BY CROWN CASTLE USA INC.
4. ALL CIRCUITS SHALL BE SEGREGATED AND MAINTAIN MINIMUM CABLE SEPARATION AS REQUIRED BY THE NEC.
5. CABLES SHALL NOT BE ROUTED THROUGH LADDER-STYLE CABLE TRAY RUNGS.
6. EACH END OF EVERY POWER, POWER PHASE CONDUCTOR (I.E., HOTS), GROUNDING AND T1 CONDUCTOR AND CABLE SHALL BE LABELED WITH COLOR-CODED INSULATION OR ELECTRICAL TAPE (3M BRAND, 1/2" PLASTIC ELECTRICAL TAPE WITH UV PROTECTION, OR EQUAL). THE IDENTIFICATION METHOD SHALL CONFORM WITH NEC AND OSHA.
7. ALL ELECTRICAL COMPONENTS SHALL BE CLEARLY LABELED WITH PLASTIC TAPE PER COLOR SCHEDULE. ALL EQUIPMENT SHALL BE LABELED WITH THEIR VOLTAGE RATING, PHASE CONFIGURATION, WIRE CONFIGURATION, POWER OR AMPACITY RATING AND BRANCH CIRCUIT ID NUMBERS (I.E. PANEL BOARD AND CIRCUIT ID'S).
8. PANEL BOARDS (ID NUMBERS) AND INTERNAL CIRCUIT BREAKERS (CIRCUIT ID NUMBERS) SHALL BE CLEARLY LABELED WITH PLASTIC LABELS.
9. ALL TIE WRAPS SHALL BE CUT FLUSH WITH APPROVED CUTTING TOOL TO REMOVE SHARP EDGES.
10. POWER, CONTROL AND EQUIPMENT GROUND WIRING IN TUBING OR CONDUIT SHALL BE SINGLE CONDUCTOR (#14 AWG OR LARGER), 600 V, OIL RESISTANT THHN OR THWN-2, CLASS B STRANDED COPPER CABLE RATED FOR 90° C (WET & DRY) OPERATION LISTED OR LABELED FOR THE LOCATION AND RACEWAY SYSTEM USED UNLESS OTHERWISE SPECIFIED.
11. SUPPLEMENTAL EQUIPMENT GROUND WIRING LOCATED INDOORS SHALL BE SINGLE CONDUCTOR (#6 AWG OR LARGER), 600V, OIL RESISTANT THHN OR THWN-2 GREEN INSULATION CLASS B STRANDED COPPER CABLE RATED FOR 90° C (WET AND DRY) OPERATION LISTED OR LABELED FOR THE LOCATION AND RACEWAY SYSTEM USED UNLESS OTHERWISE SPECIFIED.
12. POWER AND CONTROL WIRING, NOT IN TUBING OR CONDUIT, SHALL BE MULTI-CONDUCTOR, TYPE TC CABLE (#14 AWG OR LARGER), 600 V, OIL RESISTANT THHN OR THWN-2, CLASS B STRANDED COPPER CABLE RATED FOR 90° C (WET AND DRY) OPERATION WITH OUTER JACKET LISTED OR LABELED FOR THE LOCATION USED UNLESS OTHERWISE SPECIFIED.
13. ALL POWER AND GROUNDING CONNECTIONS SHALL BE CRIMP-STYLE, COMPRESSION WIRE LUGS AND WIRE NUTS BY THOMAS AND BETTS (OR EQUAL). LUGS AND WIRE NUTS SHALL BE RATED FOR OPERATION AT NO LESS THAN 75° C (90° C IF AVAILABLE).
14. RACEWAY AND CABLE TRAY SHALL BE LISTED OR LABELED FOR ELECTRICAL USE IN ACCORDANCE WITH NEMA, UL, ANSI/IEEE AND NEC.
15. ELECTRICAL METALLIC TUBING (EMT) OR RIGID NONMETALLIC CONDUIT (I.E. RIGID PVC SCHEDULE 40 OR RIGID PVC SCHEDULE 80 FOR LOCATIONS SUBJECT TO PHYSICAL DAMAGE) SHALL BE USED FOR EXPOSED INDOOR LOCATIONS.
16. ELECTRICAL METALLIC TUBING (EMT), ELECTRICAL NONMETALLIC TUBING (ENT) OR RIGID NONMETALLIC CONDUIT (RIGID PVC, SCHEDULE 40) SHALL BE USED FOR CONCEALED INDOOR LOCATIONS.
17. SCHEDULE 40 PVC UNDERGROUND ON STRAIGHTS AND SCHEDULE 80 PVC FOR ALL ELBOWS/90s AND ALL APPROVED ABOVE GRADE PVC CONDUIT.
18. LIQUID-TIGHT FLEXIBLE METALLIC CONDUIT (LIQUID-TITE FLEX) SHALL BE USED INDOORS AND OUTDOORS, WHERE VIBRATION OCCURS OR FLEXIBILITY IS NEEDED.
19. CONDUIT AND TUBING FITTINGS SHALL BE THREADED OR COMPRESSION-TYPE AND APPROVED FOR THE LOCATION USED. SET SCREW FITTINGS ARE NOT ACCEPTABLE.
20. CABINETS, BOXES AND WIRE WAYS SHALL BE LABELED FOR ELECTRICAL USE IN ACCORDANCE WITH NEMA, UL, ANSI/IEEE AND NEC.
21. WIREWAYS SHALL BE EPOXY-COATED (GRAY) AND INCLUDE A HINGED COVER, DESIGNED TO SWING OPEN DOWNWARDS; SHALL BE PANDUIT TYPE E (OR EQUAL); AND RATED NEMA 1 (OR BETTER).
22. CONDUITS SHALL BE FASTENED SECURELY IN PLACE WITH APPROVED NON-PERFORATED STRAPS AND HANGERS. EXPLOSIVE DEVICES FOR ATTACHING HANGERS TO STRUCTURE WILL NOT BE PERMITTED. CLOSELY FOLLOW THE LINES OF THE STRUCTURE, MAINTAIN CLOSE PROXIMITY TO THE STRUCTURE AND KEEP CONDUITS IN TIGHT ENVELOPES. CHANGES IN DIRECTION TO ROUTE AROUND OBSTACLES SHALL BE MADE WITH CONDUIT OUTLET BODIES. CONDUIT SHALL BE INSTALLED IN A NEAT AND WORKMANLIKE MANNER. PARALLEL AND PERPENDICULAR TO STRUCTURE WALL AND CEILING LINES. ALL CONDUIT SHALL BE FISHED TO CLEAR OBSTRUCTIONS. ENDS OF CONDUITS SHALL BE TEMPORARILY CAPPED FLUSH TO FINISH GRADE TO PREVENT CONCRETE, PLASTER OR DIRT FROM ENTERING. CONDUITS SHALL BE RIGIDLY CLAMPED TO BOXES BY GALVANIZED MALLEABLE IRON BUSHIN ON INSIDE AND GALVANIZED MALLEABLE IRON LOCKNUT ON OUTSIDE AND INSIDE.
23. EQUIPMENT CABINETS, TERMINAL BOXES, JUNCTION BOXES AND PULL BOXES SHALL BE GALVANIZED OR EPOXY-COATED SHEET STEEL; SHALL MEET OR EXCEED UL 50 AND RATED NEMA 1 (OR BETTER) INDOORS OR NEMA 3R (OR BETTER) OUTDOORS.
24. METAL RECEPTACLE, SWITCH AND DEVICE BOXES SHALL BE GALVANIZED, EPOXY-COATED OR NON-CORRODING; SHALL MEET OR EXCEED UL 514A AND NEMA OS 1; AND RATED NEMA 1 (OR BETTER) INDOORS OR WEATHER PROTECTED (WP OR BETTER) OUTDOORS.
25. NONMETALLIC RECEPTACLE, SWITCH AND DEVICE BOXES SHALL MEET OR EXCEED NEMA OS 2; AND RATED NEMA 1 (OR BETTER) INDOORS OR WEATHER PROTECTED (WP OR BETTER) OUTDOORS.
26. THE SUBCONTRACTOR SHALL NOTIFY AND OBTAIN NECESSARY AUTHORIZATION FROM THE CONTRACTOR BEFORE COMMENCING WORK ON THE AC POWER DISTRIBUTION PANELS.
27. THE SUBCONTRACTOR SHALL PROVIDE NECESSARY TAGGING ON THE BREAKERS, CABLES AND DISTRIBUTION PANELS IN ACCORDANCE WITH THE APPLICABLE CODES AND STANDARDS TO SAFEGUARD LIFE AND PROPERTY.
28. INSTALL PLASTIC LABEL ON THE METER CENTER TO SHOW "T-MOBILE".
29. ALL CONDUITS THAT ARE INSTALLED ARE TO HAVE A METERED MULE TAPE PULL CORD INSTALLED.

GREENFIELD GROUNDING NOTES:

1. ALL GROUND ELECTRODE SYSTEMS (INCLUDING TELECOMMUNICATION, RADIO, LIGHTNING PROTECTION AND AC POWER GES'S) SHALL BE BONDED TOGETHER AT OR BELOW GRADE, BY TWO OR MORE COPPER BONDING CONDUCTORS IN ACCORDANCE WITH THE NEC.
2. THE SUBCONTRACTOR SHALL PERFORM IEEE FALL-OF-POTENTAL RESISTANCE TO EARTH TESTING (PER IEEE 1100 AND 81) FOR GROUND ELECTRODE SYSTEMS. THE SUBCONTRACTOR SHALL FURNISH AND INSTALL SUPPLEMENTAL GROUND ELECTRODES AS NEEDED TO ACHIEVE A TEST RESULT OF 5 OHMS OR LESS.
3. THE SUBCONTRACTOR IS RESPONSIBLE FOR PROPERLY SEQUENCING GROUNDING AND UNDERGROUND CONDUIT INSTALLATION AS TO PREVENT ANY LOSS OF CONTINUITY IN THE GROUNDING SYSTEM OR DAMAGE TO THE CONDUIT AND PROVIDE TESTING RESULTS.
4. METAL CONDUIT AND TRAY SHALL BE GROUNDED AND MADE ELECTRICALLY CONTINUOUS WITH LISTED BONDING FITTINGS OR BY BONDING ACROSS THE DISCONTINUITY WITH #6 AWG COPPER WIRE UL APPROVED GROUNDING TYPE CONDUIT CLAMPS.
5. METAL RACEWAY SHALL NOT BE USED AS THE NEC REQUIRED EQUIPMENT GROUND CONDUCTOR. STRANDED COPPER CONDUCTORS WITH GREEN INSULATION, SIZED IN ACCORDANCE WITH THE NEC, SHALL BE FURNISHED AND INSTALLED WITH THE POWER CIRCUITS TO BTS EQUIPMENT.
6. EACH CABINET FRAME SHALL BE DIRECTLY CONNECTED TO THE MASTER GROUND BAR WITH GREEN INSULATED SUPPLEMENTAL EQUIPMENT GROUND WIRES, 6 AWG STRANDED COPPER OR LARGER FOR INDOOR BTS; #2 AWG SOLID TINNED COPPER FOR OUTDOOR BTS.
7. CONNECTIONS TO THE GROUND BUS SHALL NOT BE DOUBLED UP OR STACKED BACK TO BACK CONNECTIONS ON OPPOSITE SIDE OF THE GROUND BUS ARE PERMITTED.
8. ALL EXTERIOR GROUND CONDUCTORS BETWEEN EQUIPMENT/GROUND BARS AND THE GROUND RING SHALL BE #2 AWG SOLID TINNED COPPER UNLESS OTHERWISE INDICATED.
9. ALUMINUM CONDUCTOR OR COPPER CLAD STEEL CONDUCTOR SHALL NOT BE USED FOR GROUNDING CONNECTIONS.
10. USE OF 90° BENDS IN THE PROTECTION GROUNDING CONDUCTORS SHALL BE AVOIDED WHEN 45° BENDS CAN BE ADEQUATELY SUPPORTED.
11. EXOTHERMIC WELDS SHALL BE USED FOR ALL GROUNDING CONNECTIONS BELOW GRADE.
12. ALL GROUND CONNECTIONS ABOVE GRADE (INTERIOR AND EXTERIOR) SHALL BE FORMED USING HIGH PRESS CRIMPS.
13. COMPRESSION GROUND CONNECTIONS MAY BE REPLACED BY EXOTHERMIC WELD CONNECTIONS.
14. ICE BRIDGE BONDING CONDUCTORS SHALL BE EXOTHERMICALLY BONDED OR BOLTED TO THE BRIDGE AND THE TOWER GROUND BAR.
15. APPROVED ANTIOXIDANT COATINGS (I.E. CONDUCTIVE GEL OR PASTE) SHALL BE USED ON ALL COMPRESSION AND BOLTED GROUND CONNECTIONS.
16. ALL EXTERIOR GROUND CONNECTIONS SHALL BE COATED WITH A CORROSION RESISTANT MATERIAL.
17. MISCELLANEOUS ELECTRICAL AND NON-ELECTRICAL METAL BOXES, FRAMES AND SUPPORTS SHALL BE BONDED TO THE GROUND RING, IN ACCORDANCE WITH THE NEC.
18. BOND ALL METALLIC OBJECTS WITHIN 6 FT. OF MAIN GROUND WIRES WITH 1-#2 AWG TIN-PLATED COPPER GROUND CONDUCTOR.
19. GROUND CONDUCTORS USED IN THE FACILITY GROUND AND LIGHTNING PROTECTION SYSTEMS SHALL NOT BE ROUTED THROUGH METALLIC OBJECTS THAT FORM A RING AROUND THE CONDUCTOR, SUCH AS METALLIC CONDUITS, METAL SUPPORT CLIPS OR SLEEVES THROUGH WALLS OR FLOORS, WHEN IT IS REQUIRED TO BE HOUSED IN CONDUIT TO MEET CODE REQUIREMENTS OR LOCAL CONDITIONS, NON-METALLIC MATERIAL SUCH AS PVC PLASTIC CONDUIT SHALL BE USED. WHERE USE OF METAL CONDUIT IS UNAVOIDABLE (E.G., NONMETALLIC CONDUIT PROHIBITED BY LOCAL CODE) THE GROUND CONDUCTOR SHALL BE BONDED TO EACH END OF THE METAL CONDUIT.
20. ALL GROUNDS THAT TRANSITION FROM BELOW GRADE TO ABOVE GRADE MUST BE #2 TINNED SOLID IN 3/4" LIQUID TIGHT CONDUIT FROM 24" BELOW GRADE TO WITHIN 3" TO 6" OF CAD-WELD TERMINATION POINT. THE EXPOSED END OF THE LIQUID TIGHT CONDUIT MUST BE SEALED WITH SILICONE CAULK. (ADD TRANSITIONING GROUND STANDARD DETAIL AS WELL).

NEC INSULATOR COLOR CODE

DESCRIPTION	PHASE/CODE LETTER	WIRE COLOR
240/120 1Ø	LEG 1	BLACK
	LEG 2	RED
AC NEUTRAL	N	WHITE
GROUND (EGC)	G	GREEN
VDC POS	+	*RED-POLARITY MARK AT TERMINATION
VDC NEG	–	*BLACK-POLARITY MARK AT TERMINATION
240V OR 208V, 3Ø	PHASE A	BLACK
	PHASE B	RED(ORG. IF HI LEG)
	PHASE C	BLUE
480V, 3Ø	PHASE A	BROWN
	PHASE B	ORANGE
	PHASE C	YELLOW

* SEE NEC 210.5(C)(1) AND (2)

T-Mobile
12920 SE 38TH STREET
BELLEVUE, WA 98006

BROADUS services
4 COUNTRY PLACE CIRCLE
DALWORTHINGTON GARDENS
TEXAS 76016
OFFICE: (817) 349 3449
FAX: 800 401 4234

T-MOBILE SITE NUMBER:
SL01122A
BU #: **822343**
ALPINE_SHEPHERD_HILL

651 S. BATEMAN
ALPINE, UT 84004

EXISTING 22'-0" MONOPOLE

ISSUED FOR:

REV	DATE	DRWN	DESCRIPTION	DES./QA
0	05/01/2019	WHS	FINAL	ELG

PROFESSIONAL ENGINEER
No. 9228401-2202
JACOB GORALSKI
STATE OF UTAH

5/9/2019

JACOB GORALSKI, PLLC
CONSULTING ENGINEER
JACOB GORALSKI, PLLC
UT PE# 9226401-2202
1106 COLBI ST.
KENNEDALE, TX 76060
(817) 456-2621

IT IS A VIOLATION OF LAW FOR ANY PERSON, UNLESS THEY ARE ACTING UNDER THE DIRECTION OF A LICENSED PROFESSIONAL ENGINEER, TO ALTER THIS DOCUMENT.

SHEET NUMBER: T-2

REVISION: 0

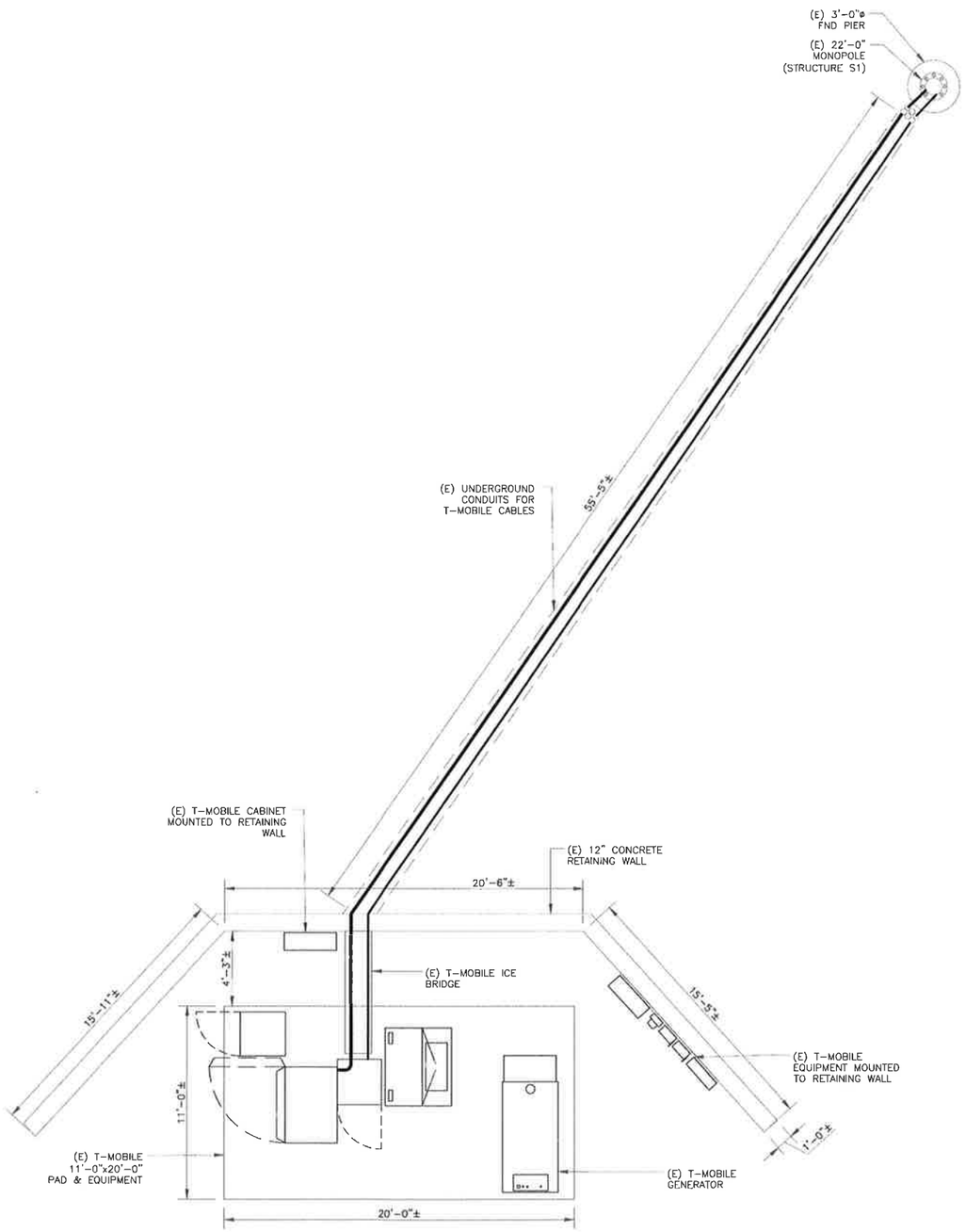

1 SITE PLAN
SCALE: 1/4"=1'-0" (FULL SIZE) 1/8"=1'-0" (11x17)

N

T-Mobile
12920 SE 38TH STREET
BELLEVUE, WA 98006

BROADUS services
4 COUNTRY PLACE CIRCLE
DALWORTHINGTON GARDENS
TEXAS 76016
OFFICE: (817) 349 3449
FAX: 800 401 4234

T-MOBILE SITE NUMBER:
SL01122A
BU #: **822343**
ALPINE_SHEPHERD_HILL

651 S. BATEMAN
ALPINE, UT 84004

EXISTING 22'-0" MONOPOLE

ISSUED FOR:

REV	DATE	DRWN	DESCRIPTION	DES./QA
0	05/01/2019	WHS	FINAL	ELG

PROFESSIONAL ENGINEER No. 9226401-2202 JACOB GORALSKI STATE OF UTAH

5/9/2019

JACOB GORALSKI, PLLC
CONSULTING ENGINEER
JACOB GORALSKI, PLLC
UT PE# 9226401-2202
1106 COLBI ST.
KENNEDALE, TX 76060
(817) 456-2621

IT IS A VIOLATION OF LAW FOR ANY PERSON, UNLESS THEY ARE ACTING UNDER THE DIRECTION OF A LICENSED PROFESSIONAL ENGINEER, TO ALTER THIS DOCUMENT.

SHEET NUMBER: C-1.1
REVISION: 0

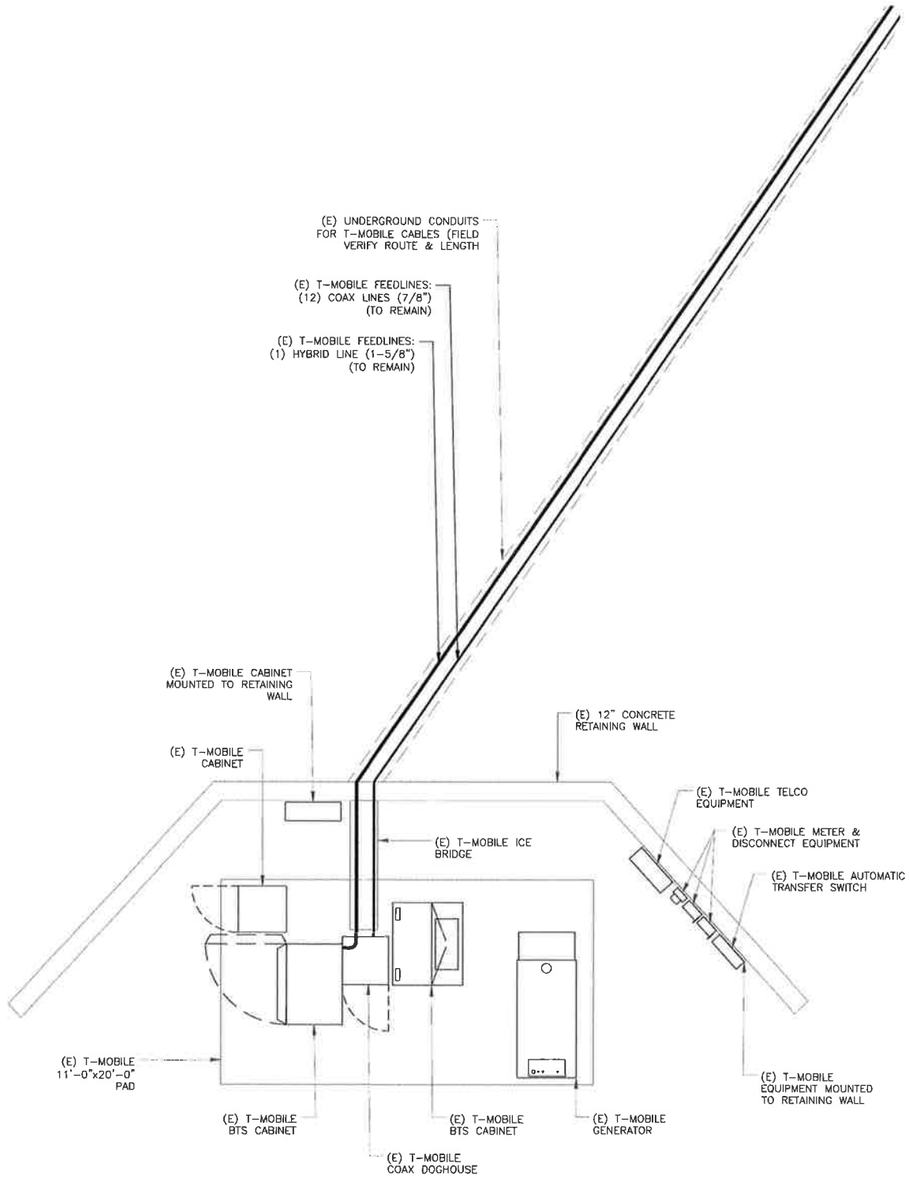

1 EXISTING EQUIPMENT LAYOUT PLAN

SCALE: 2' 1' 0 2' 1/2"=1'-0" (FULL SIZE) 1/4"=1'-0" (11x17)

N

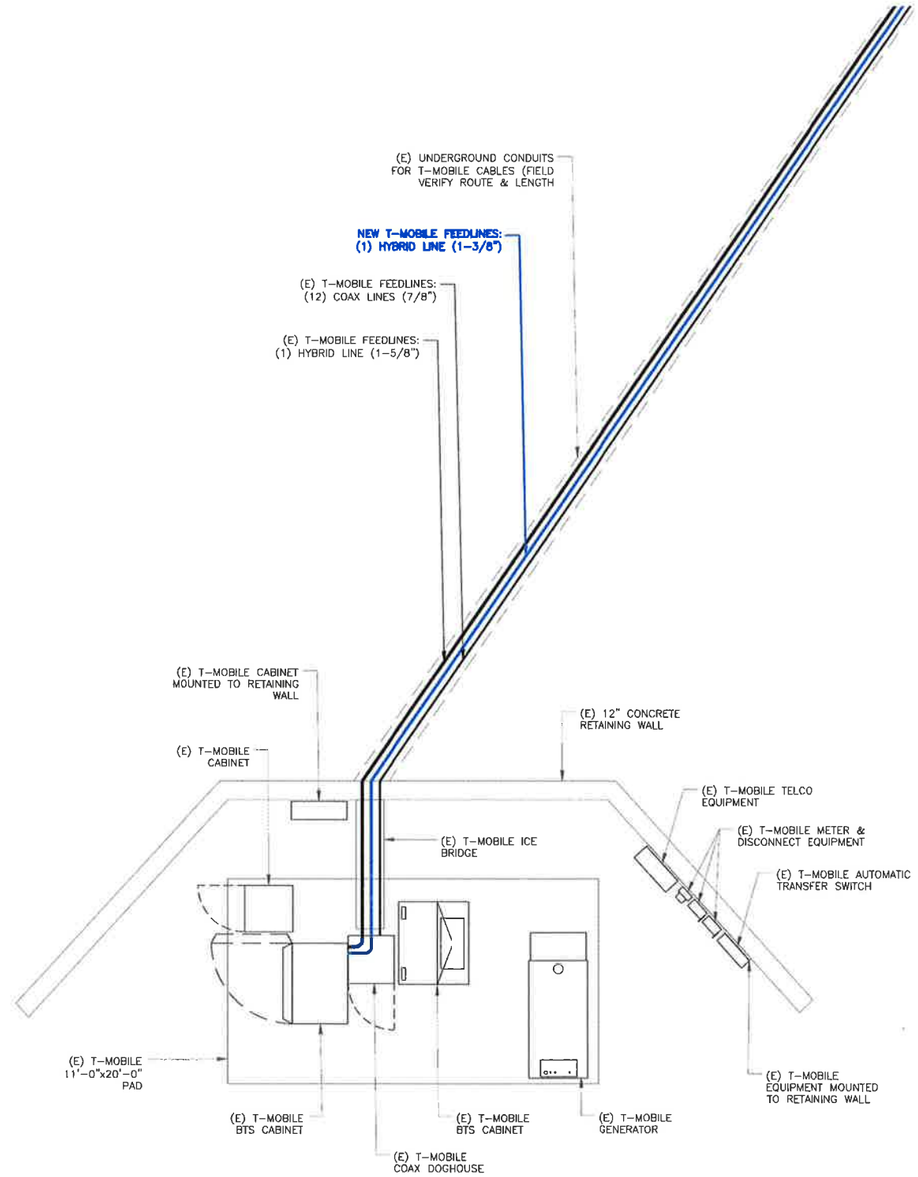

GROUND SCOPE OF WORK

REMOVED
(1) DUS41

REMAIN
(1) DUW30, (1) DUG20, (6) RUS01 B2

NEW
(2) BB 6630

2 FINAL EQUIPMENT LAYOUT PLAN

SCALE: 2' 1' 0 2' 1/2"=1'-0" (FULL SIZE) 1/4"=1'-0" (11x17)

N

T-Mobile

12920 SE 38TH STREET
BELLEVUE, WA 98006

BROADUS services
4 COUNTRY PLACE CIRCLE
DALWORTHINGTON GARDENS
TEXAS 76016
OFFICE: (817) 349 3449
FAX: 800 401 4234

T-MOBILE SITE NUMBER:
SL01122A
BU #: **822343**
ALPINE_SHEPHERD_HILL

651 S. BATEMAN
ALPINE, UT 84004

EXISTING 22'-0" MONOPOLE

ISSUED FOR:

REV	DATE	DRWN	DESCRIPTION	DES./QA
0	05/01/2019	WHS	FINAL	ELG

PROFESSIONAL ENGINEER
No. 9226401-2202
JACOB GORALSKI
STATE OF UTAH

5/9/2019

JACOB GORALSKI, PLLC
CONSULTING ENGINEER
JACOB GORALSKI, PLLC
UT PE# 9226401-2202
1106 COLBI ST.
KENNEDALE, TX 76060
(817) 456-2621

IT IS A VIOLATION OF LAW FOR ANY PERSON, UNLESS THEY ARE ACTING UNDER THE DIRECTION OF A LICENSED PROFESSIONAL ENGINEER, TO ALTER THIS DOCUMENT.

SHEET NUMBER: C-1.2

REVISION: 0

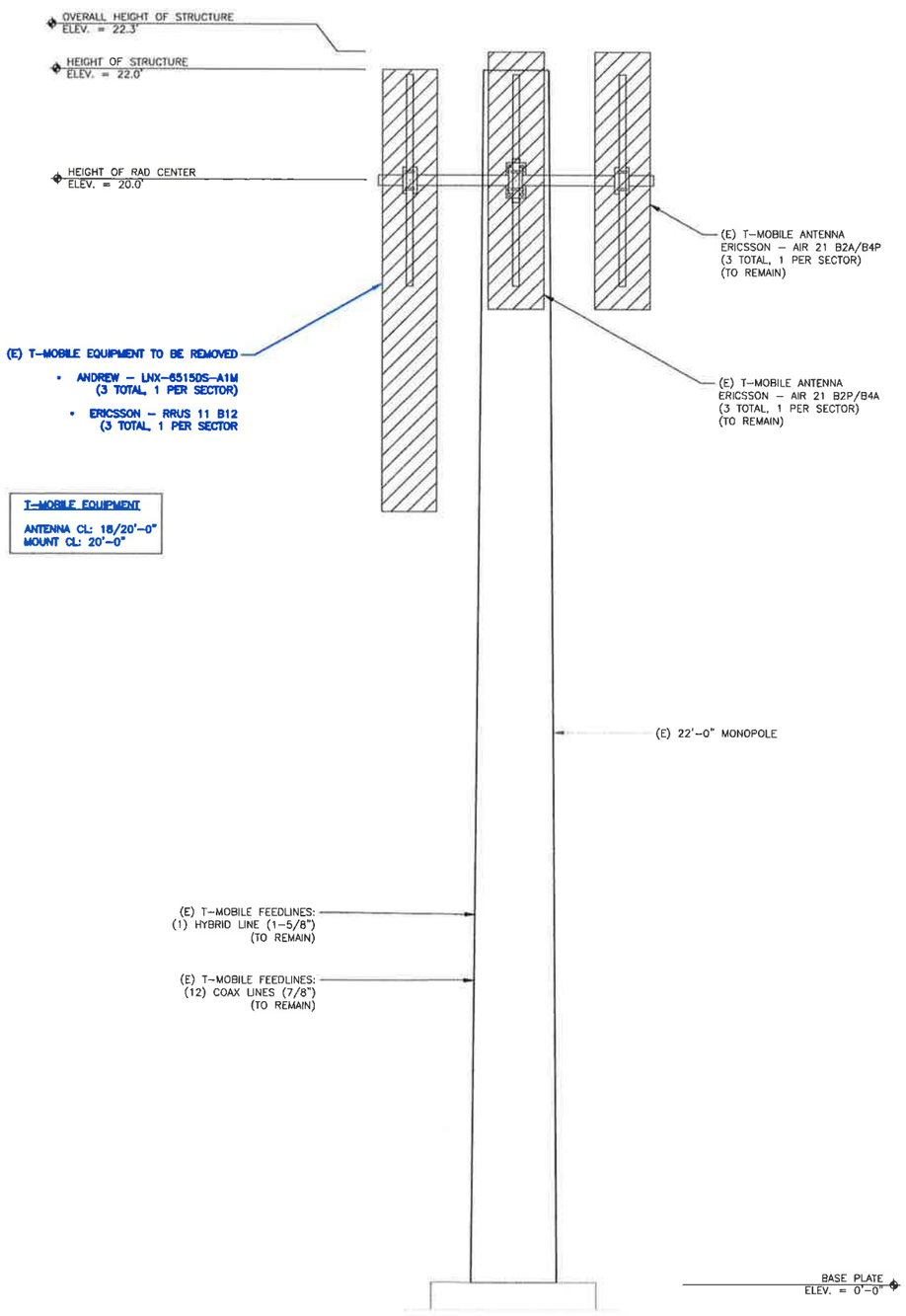

1 EXISTING ELEVATION
SCALE: NOT TO SCALE

MOUNT ANALYSIS NOTE:

1. THE DESIGN DEPICTED IN THESE DRAWINGS IS VALID WHEN ACCOMPANIED BY A CORRESPONDING PASSING MOUNT ANALYSIS.
2. CONSTRUCTION MANAGER/GENERAL CONTRACTOR SHALL REVIEW THE MOUNT ANALYSIS FOR ANY CONDITIONS PRIOR TO INSTALLATION.
3. ANY REQUIRED MOUNT MODIFICATION DESIGN OR MOUNT REPLACEMENT SHALL BE APPROVED BY EOR.

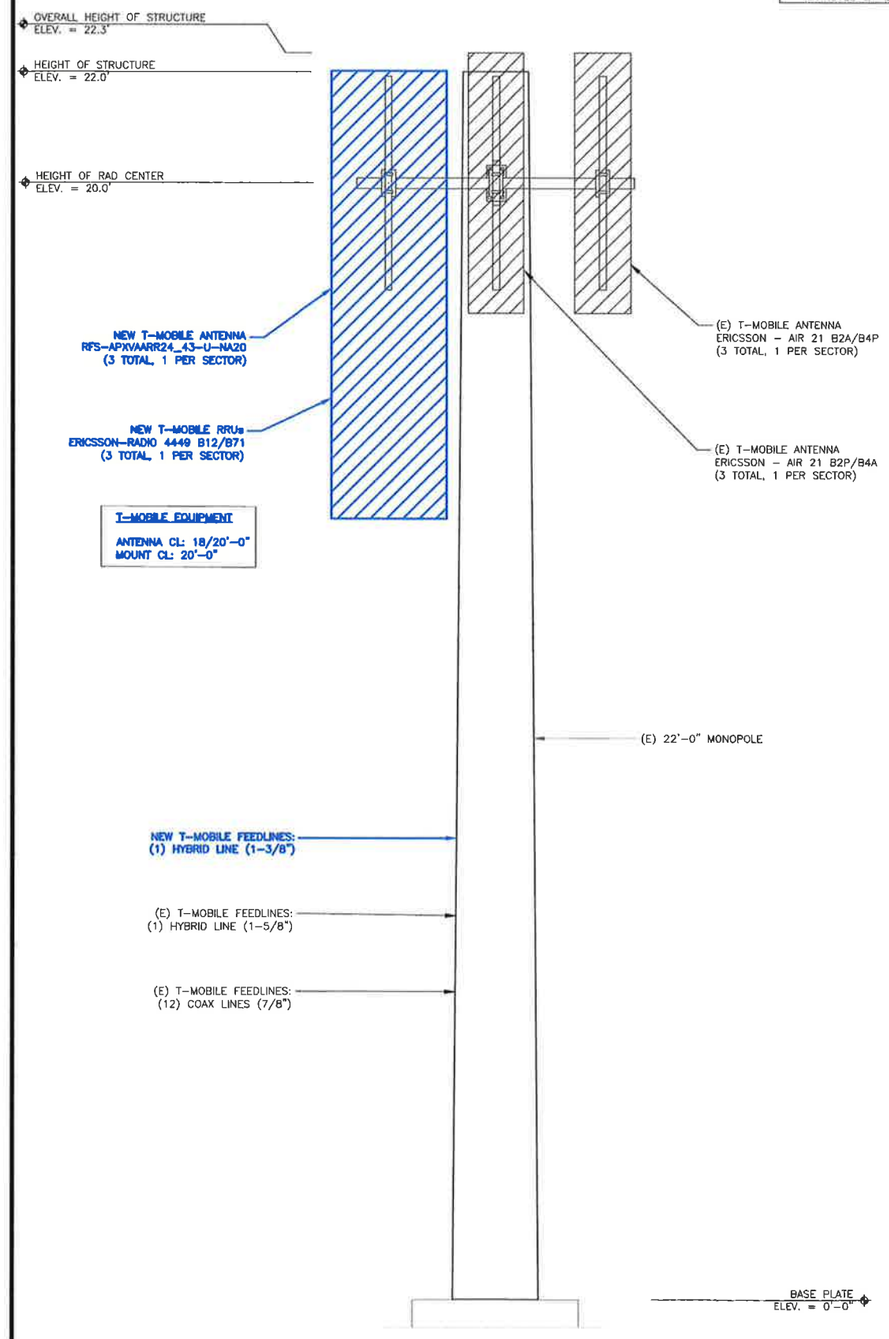

2 FINAL ELEVATION
SCALE: NOT TO SCALE

T-Mobile
12920 SE 38TH STREET
BELLEVUE, WA 98006

BROADUS services
4 COUNTRY PLACE CIRCLE
DALWORTHINGTON GARDENS
TEXAS 76016
OFFICE: (817) 349 3449
FAX: 800 401 4234

T-MOBILE SITE NUMBER:
SL01122A
BU #: **822343**
ALPINE_SHEPHERD_HILL

651 S. BATEMAN
ALPINE, UT 84004

EXISTING 22'-0" MONOPOLE

ISSUED FOR:

REV	DATE	DRWN	DESCRIPTION	DES./QA
0	05/01/2019	WHS	FINAL	ELG

PROFESSIONAL ENGINEER
No. 9226401-2202
JACOB GORALSKI
STATE OF UTAH

5/9/2019

JACOB GORALSKI, PLLC
CONSULTING ENGINEER
JACOB GORALSKI, PLLC
UT PE# 9226401-2202
1106 COLBI ST.
KENNEDALE, TX 76060
(817) 456-2621

IT IS A VIOLATION OF LAW FOR ANY PERSON, UNLESS THEY ARE ACTING UNDER THE DIRECTION OF A LICENSED PROFESSIONAL ENGINEER, TO ALTER THIS DOCUMENT.

SHEET NUMBER: C-2
REVISION: 0

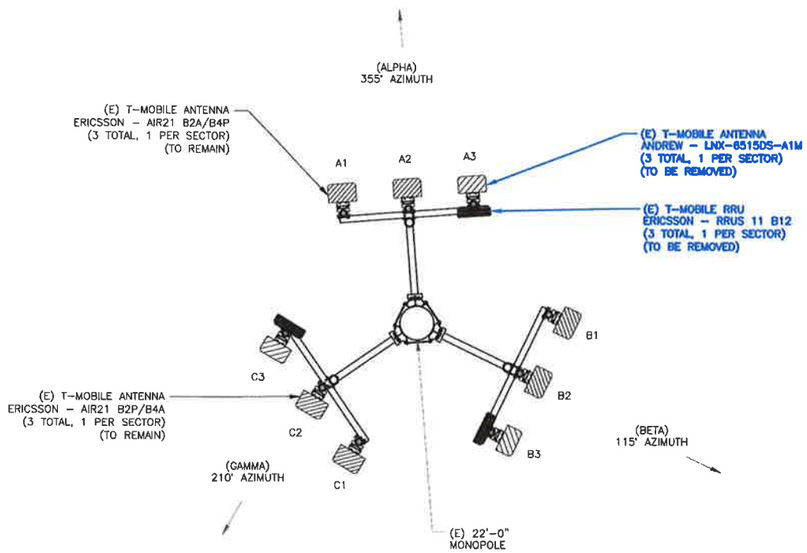

1 EXISTING ANTENNA LAYOUT
SCALE: NOT TO SCALE

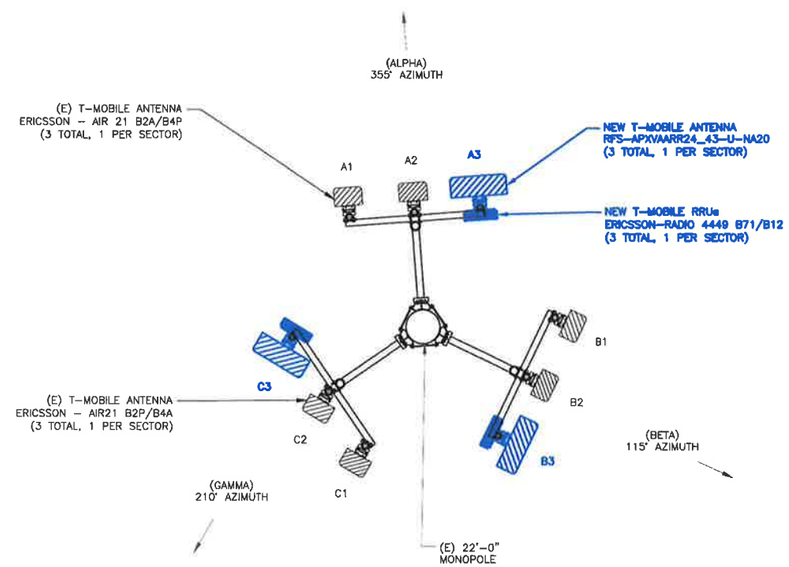

2 NEW ANTENNA LAYOUT
SCALE: NOT TO SCALE

3 ANTENNA PHOTO
SCALE: NOT TO SCALE

4 NOT USED
SCALE: NOT TO SCALE

T-Mobile
12920 SE 38TH STREET
BELLEVUE, WA 98006

BROADUS services
4 COUNTRY PLACE CIRCLE
DALWORTHINGTON GARDENS
TEXAS 76016
OFFICE: (817) 349 3449
FAX: 800 401 4234

T-MOBILE SITE NUMBER:
SL01122A
BU #: **822343**
ALPINE_SHEPHERD_HILL

651 S. BATEMAN
ALPINE, UT 84004

EXISTING 22'-0" MONOPOLE

ISSUED FOR:

REV	DATE	DRWN	DESCRIPTION	DES./QA
0	05/01/2019	WHS	FINAL	ELG

PROFESSIONAL ENGINEER
No. 9226401-2202
JACOB GORALSKI
STATE OF UTAH

5/9/2019

JACOB GORALSKI, PLLC
CONSULTING ENGINEER
JACOB GORALSKI, PLLC
UT PE# 9226401-2202
1106 COLBI ST.
KENNEDALE, TX 76060
(817) 456-2621

IT IS A VIOLATION OF LAW FOR ANY PERSON, UNLESS THEY ARE ACTING UNDER THE DIRECTION OF A LICENSED PROFESSIONAL ENGINEER, TO ALTER THIS DOCUMENT.

SHEET NUMBER: C-3
REVISION: 0

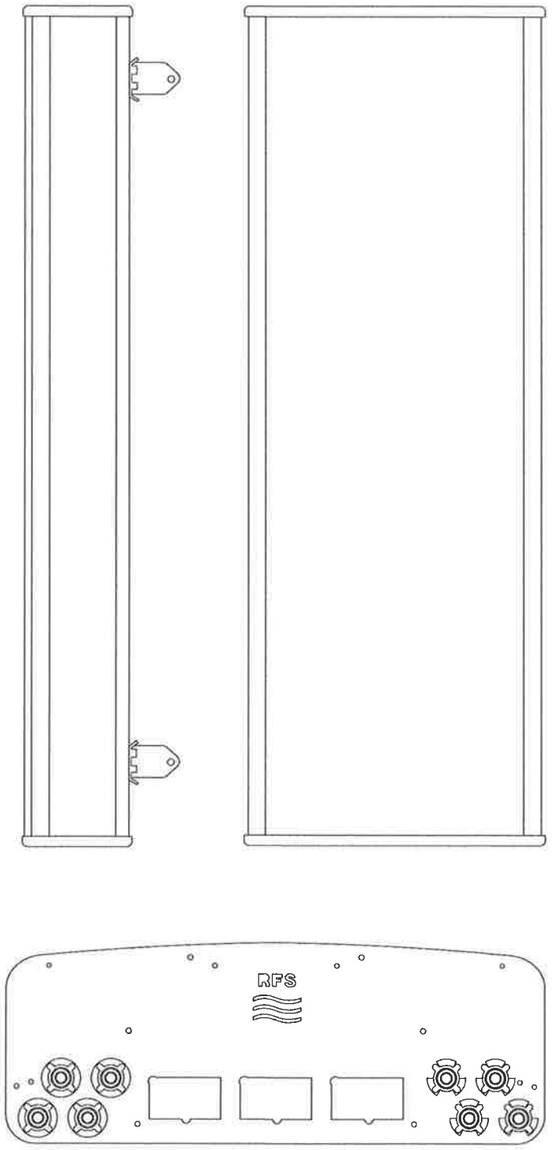

RFS – APXVAARR24_43-U-NA20
SIZE (HxWxD): 95.9x24x8.7 IN.
MOUNTING HARDWARE P/N: BSAMNT-4
RATED WIND VELOCITY:150.0 MPH
CONNECTOR TYP: 8 X 4.3-10 FEMALE

1 RFS – APXVAARR24_43-U-NA20
SCALE: NOT TO SCALE

2 NOT USED
SCALE: NOT TO SCALE

T-Mobile
12920 SE 38TH STREET
BELLEVUE, WA 98006

BROADUS services
4 COUNTRY PLACE CIRCLE
DALWORTHINGTON GARDENS
TEXAS 76016
OFFICE: (817) 349 3449
FAX: 800 401 4234

T-MOBILE SITE NUMBER:
SL01122A
BU #: **822343**
ALPINE_SHEPHERD_HILL

651 S. BATEMAN
ALPINE, UT 84004

EXISTING 22'-0" MONOPOLE

ISSUED FOR:

REV	DATE	DRWN	DESCRIPTION	DES./QA
0	05/01/2019	WHS	FINAL	ELG

PROFESSIONAL ENGINEER
No. 9226401-2202
JACOB GORALSKI
STATE OF UTAH

5/9/2019

JACOB GORALSKI, PLLC
CONSULTING ENGINEER
JACOB GORALSKI, PLLC
UT PE# 9226401-2202
1106 COLBI ST.
KENNEDALE, TX 76060
(817) 456-2621

IT IS A VIOLATION OF LAW FOR ANY PERSON, UNLESS THEY ARE ACTING UNDER THE DIRECTION OF A LICENSED PROFESSIONAL ENGINEER, TO ALTER THIS DOCUMENT.

SHEET NUMBER: C-4
REVISION: 0

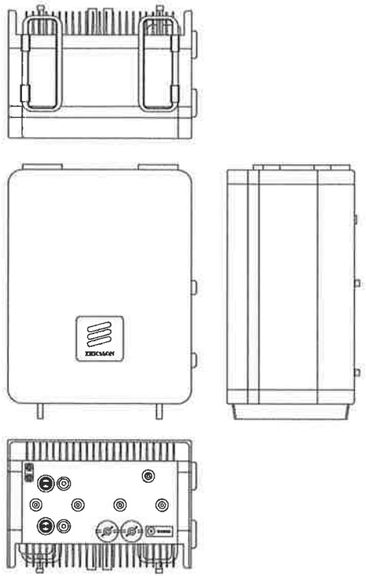

ERICSSON – RADIO 4449 B12/B71
WEIGHT: 75.0 LBS
SIZE (HxWxD): 15.0x13.2x10.4 IN.

1 ERICSSON–RADIO 4449 B12/B71
SCALE: NOT TO SCALE

2 NOT USED
SCALE: NOT TO SCALE

3 NOT USED
SCALE: NOT TO SCALE

NOTE:
ANTENNA NOT SHOWN FOR CLARITY

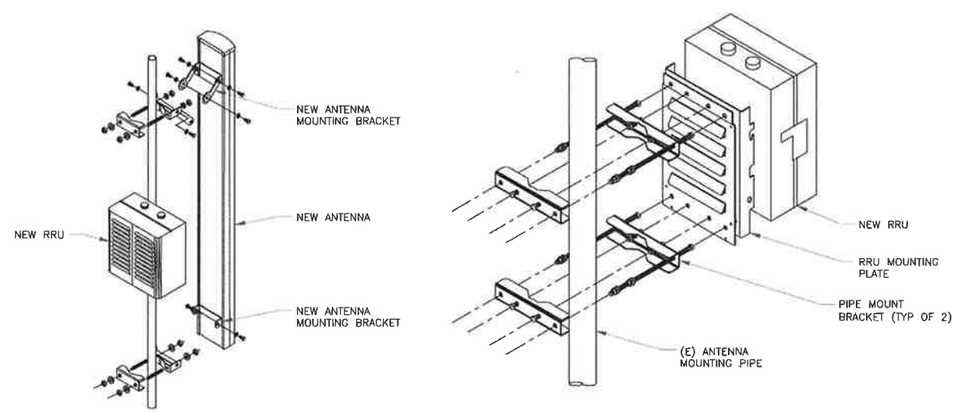

NOTE:
ALL PIPES BRACKETS AND MISCELLANEOUS HARDWARE TO BE GALVANIZED UNLESS NOTED OTHERWISE

4 ANTENNA & RRU MOUNTING DETAIL
SCALE: NOT TO SCALE

T-Mobile
12920 SE 38TH STREET
BELLEVUE, WA 98006

BROADUS services
4 COUNTRY PLACE CIRCLE
DALWORTHINGTON GARDENS
TEXAS 76016
OFFICE: (817) 349 3449
FAX: 800 401 4234

T-MOBILE SITE NUMBER:
SL01122A
BU #: **822343**
ALPINE_SHEPHERD_HILL

651 S. BATEMAN
ALPINE, UT 84004

EXISTING 22'-0" MONOPOLE

ISSUED FOR:

REV	DATE	DRWN	DESCRIPTION	DES./QA
0	05/01/2019	WHS	FINAL	ELG

PROFESSIONAL ENGINEER
No. 9226401-2202
JACOB GORALSKI
STATE OF UTAH

5/9/2019

JACOB GORALSKI, PLLC
CONSULTING ENGINEER
JACOB GORALSKI, PLLC
UT PE# 9226401–2202
1106 COLBI ST.
KENNEDALE, TX 76060
(817) 456–2621

IT IS A VIOLATION OF LAW FOR ANY PERSON, UNLESS THEY ARE ACTING UNDER THE DIRECTION OF A LICENSED PROFESSIONAL ENGINEER, TO ALTER THIS DOCUMENT.

SHEET NUMBER: C-5
REVISION: 0

ANTENNA KEY

STATUS	ANTENNA NUMBER	COLOR CODE	BEAM WIDTH	ANTENNA VENDOR	MODEL NO.	AZIMUTH	ELECTRICAL DOWNTILT	MECHANICAL DOWNTILT	ANTENNA ℄ AGL	TYPE	COAXIAL FEEDER SIZE	COAXIAL FEEDER LENGTH	HYBRID CABLE FEEDER QUANTITY	HYBRID CABLE FEEDER COLOR CODE
EXISTING	A1	RED 1/RW+BW RED 2/RW+BW – –	TBD	ERICSSON	AIR 21 B2A/B4P	355°	2°	0°	22'-0"	UMTS PCS GSM PCS –	7/8"	100'	(2) HYBRID CABLE	GREY 1
EXISTING	A2	– – RED 3/YB RED 4/YB	TBD	ERICSSON	AIR 21 B2P/B4A	355°	2°	0°	22'-0"	– LTE AWS	7/8"	100'	SHARED WITH A1	GREY 1
NEW	A3	RED 1/RB+W RED 2/RB+W RED 3/RB+W RED 4/RB+W – – – –	TBD	RFS	APXVAARR24_43-U-NA20	355°	2°	0°	18'-0"	LTE 700 LTE 600	–	–	SHARED WITH A1	GREY 1
										–	–	–	SHARED WITH A1	GREY 1
EXISTING	B1	YELLOW 1/RW+BW YELLOW 2/RW+BW – –	TBD	ERICSSON	AIR 21 B2A/B4P	115°	2°	0°	22'-0"	UMTS PCS GSM PCS –	7/8"	100'	SHARED WITH A1	GREY 1
EXISTING	B2	– – YELLOW 3/YB YELLOW 4/YB	TBD	ERICSSON	AIR 21 B2P/B4A	115°	2°	0°	22'-0"	– LTE AWS	7/8"	100'	SHARED WITH A1	GREY 1
NEW	B3	YELLOW 1/RB+W YELLOW 2/RB+W YELLOW 3/RB+W YELLOW 4/RB+W – – – –	TBD	RFS	APXVAARR24_43-U-NA20	115°	2°	0°	18'-0"	LTE 700 LTE 600	–	–	SHARED WITH A1	GREY 1
										–	–	–	SHARED WITH A1	GREY 1
EXISTING	C1	BLUE 1/RW+BW BLUE 2/RW+BW – –	TBD	ERICSSON	AIR 21 B2A/B4P	210°	5°	0°	22'-0"	UMTS PCS GSM PCS –	7/8"	100'	SHARED WITH A1	GREY 1
EXISTING	C2	– – BLUE 3/YB BLUE 4/YB	TBD	ERICSSON	AIR 21 B2P/B4A	210°	5°	0°	22'-0"	– LTE AWS	7/8"	100'	SHARED WITH A1	GREY 1
NEW	C3	BLUE 1/RB+W BLUE 2/RB+W BLUE 3/RB+W BLUE 4/RB+W – – – –	TBD	RFS	APXVAARR24_43-U-NA20	210°	6°	0°	18'-0"	LTE 700 LTE 600	–	–	SHARED WITH A1	GREY 1
										–	–	–	SHARED WITH A1	GREY 1

1 ANTENNA CONFIGURATION KEY
SCALE: NOT TO SCALE

T-Mobile
12920 SE 38TH STREET
BELLEVUE, WA 98006

BROADUS services
4 COUNTRY PLACE CIRCLE
DALWORTHINGTON GARDENS
TEXAS 76016
OFFICE: (817) 349 3449
FAX: 800 401 4234

T-MOBILE SITE NUMBER:
SL01122A
BU #: **822343**
ALPINE_SHEPHERD_HILL

651 S. BATEMAN
ALPINE, UT 84004

EXISTING 22'-0" MONOPOLE

ISSUED FOR:

REV	DATE	DRWN	DESCRIPTION	DES./QA
0	05/01/2019	WHS	FINAL	ELG

PROFESSIONAL ENGINEER
No. 9226401-2202
JACOB GORALSKI
STATE OF UTAH

5/9/2019

JACOB GORALSKI, PLLC
CONSULTING ENGINEER
JACOB GORALSKI, PLLC
UT PE# 9226401-2202
1106 COLBI ST.
KENNEDALE, TX 76060
(817) 456-2621

IT IS A VIOLATION OF LAW FOR ANY PERSON, UNLESS THEY ARE ACTING UNDER THE DIRECTION OF A LICENSED PROFESSIONAL ENGINEER, TO ALTER THIS DOCUMENT.

SHEET NUMBER: C-6
REVISION: 0

ANTENNA NOTES:

1. ANTENNA CONTRACTOR SHALL INSURE THAT ALL ANTENNA MOUNTING PIPES ARE PLUMB.
2. COAXIAL FEEDER & FIBER LENGTHS INDICATED ARE APPROXIMATE.
3. ANTENNA COAXIAL FEEDERS & ANTENNA JUMPERS SHALL BE COLOR CODED PER T-MOBILE REQUIREMENTS. IN ADDITION TO THE COLOR CODE IN THE ANTENNA KEY THE FOLLOWING CHECKER STRIPE SHALL BE ADDED TO EACH ANTENNA COAXIAL FEEDER & ANTENNA JUMPER.

   LTE 600 – WHITE STRIPE
   LTE 700 – RED-BLACK CHECKER STRIPE
   LTE PCS – GREEN-BLACK CHECKER STRIPE
   LTE AWS – YELLOW-BLACK CHECKER STRIPE
   UMTS PCS – RED-WHITE CHECKER STRIPE
   UMTS AWS – GREEN-WHITE CHECKER STRIPE
   GSM PCS – BLACK-WHITE CHECKER STRIPE
4. LMU COAXIAL FEEDERS & JUMPERS SHALL BE COLOR CODED BROWN 1 STRIPE & BROWN 2 STRIPE. IN ADDITION TO THE COLOR CODE THE FOLLOWING ANTENNA SECTOR COLOR STRIPE SHALL BE ADDED TO EACH ANTENNA SECTOR LMU COAXIAL FEEDER & JUMPER.

   ALPHA– RED STRIPE
   BETA– YELLOW STRIPE
   GAMMA– BLUE STRIPE
   DELTA– GREEN STRIPE
   EPSILON– WHITE STRIPE
   ZETA– PURPLE STRIPE
5. UMTS AWS LINE 1 & 2 TO HAVE TMA, MOUNTED ON PIPE BEHIND ANTENNA POSITION #2.
6. MULTI-PORTS ANTENNAS: TERMINATE UNUSED ANTENNA PORTS WITH CONNECTOR CAP & WEATHERPROOF THOROUGHLY. JUMPERS FROM TMAS MUST TERMINATE TO OPPOSITE POLARIZATIONS IN EACH SECTOR.
7. CONTRACTOR MUST FOLLOW ALL MANUFACTURERS' RECOMMENDATIONS REGARDING THE INSTALLATION OF COAXIAL CABLES, CONNECTORS & ANTENNAS.
8. MINIMUM BEND RADIUS:

   LDF4-50A (1/2" HARD LINE) = 5"
   FSJ4-50B (1/2" SUPER FLEX) = 1 1/4"
   AVA5-50A (7/8" HARD LINE) = 10"
   AVA7-50A (1 5/8 HARD LINE) = 15"
   LDF7-50A (1 5/8" HARD LINE) = 20"
9. CONTRACTOR SHALL RECORD THE SERIAL, SECTOR & POSITION OF EACH ACTUATOR INSTALLED AT THE ANTENNAS AND FURNISH THE INFORMATION TO T-MOBILE.
10. WEATHERPROOF ALL ANTENNA CONNECTORS WITH SELF-AMALGAMATING TAPE.
11. ANTENNA CONTRACTOR SHALL PERFORM A "TAPE DROP" MEASUREMENT TO CONFIRM/VALIDATE ANTENNA CENTERLINE (ACL) HEIGHT. CONTRACTOR SHALL SUBMIT A COMPLETED HEIGHT VERIFICATION FORM TO THE CONSTRUCTION MANAGER.
12. ALL FIBER RUNS CONTAINED IN ONE COMMSCOPE HYBRID DC-FIBER CABLE MODEL #ASU9325TYP01 FROM LOWER COVP TO UPPER COVP. HYBRID SHALL BE COLOR CODED PER T-MOBILE REQUIREMENTS. (CONTRACTOR SHALL VERIFY REQUIRED LENGTH WITH T-MOBILE OPERATIONS)

EQUIPMENT KEY – GROUND EQUIPMENT

LOCATION	VENDOR	EQUIPMENT	MODEL NO.	TECH	QTY.	STATUS
MOUNTED IN CABINET	ERICSSON	SYSTEM MODULE	DUW30	UTMS PCS	2	EXISTING
			DUG20	GSM PCS	1	EXISTING
			BB 6630	**LTE 700, LTE 600, LTE AWS**	**1**	**NEW**
			BB 6630	**N600 (DARK)**	**1**	**NEW**
			RUS01 B2	UMTS PCS, GSM PCS	6	EXISTING

EQUIPMENT KEY – TOWER EQUIPMENT

ANTENNA SECTOR	VENDOR	EQUIPMENT	MODEL NO.	TECH	QTY.	STATUS
1 PER SECTOR	**ERICSSON**	**RRU**	**RADIO 4449 B71+B12**	**LTE 600 LTE 700**	**3**	**NEW**

EQUIPMENT KEY – FEEDLINE

LOCATION	VENDOR	EQUIPMENT	MODEL NO.	LENGTH	QTY.	STATUS
MULTI-SECTOR	HUBER+SUHNER	HYBRID CABLE	MLE HYBRID 9PWR/18FIBER RL2	100'-0'	1	EXISTING
MULTI-SECTOR	ANDREW	COAX	AVA5-50	100'-0'	12	EXISTING
MULTI-SECTOR	**ERICSSON**	**HYBRID CABLE**	**HCS 6X12 6AWG**	**100'-0'**	**1**	**NEW**

1 EQUIPMENT CONFIGURATION KEYS
SCALE: NOT TO SCALE

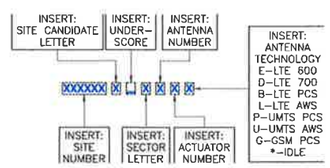

BASE STATION ID
(TO BE USED FOR "BASE STATION ID" DATA FIELD IN THE TMO UPGRADE APPLICATION SOFTWARE)

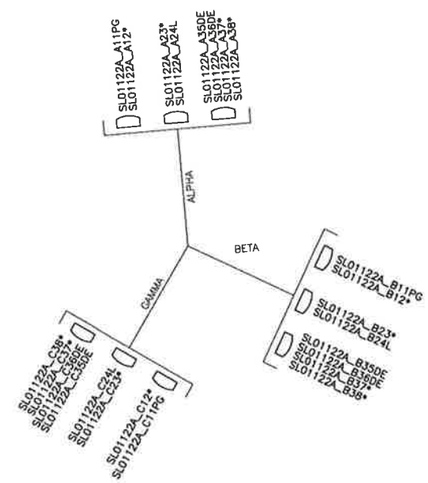

2 RET ACTUATOR NAMING DIAGRAM
SCALE: NOT TO SCALE

T-Mobile
12920 SE 38TH STREET
BELLEVUE, WA 98006

BROADUS services
4 COUNTRY PLACE CIRCLE
DALWORTHINGTON GARDENS
TEXAS 76016
OFFICE: (817) 349 3449
FAX: 800 401 4234

T-MOBILE SITE NUMBER:
SL01122A
BU #: **822343**
ALPINE_SHEPHERD_HILL

651 S. BATEMAN
ALPINE, UT 84004

EXISTING 22'-0" MONOPOLE

ISSUED FOR:

REV	DATE	DRWN	DESCRIPTION	DES./QA
0	05/01/2019	WHS	FINAL	ELG

PROFESSIONAL ENGINEER
No. 9226401-2202
JACOB GORALSKI
STATE OF UTAH

5/9/2019

JACOB GORALSKI, PLLC
CONSULTING ENGINEER
JACOB GORALSKI, PLLC
UT PE# 9226401-2202
1106 COLBI ST.
KENNEDALE, TX 76060
(817) 456-2621

IT IS A VIOLATION OF LAW FOR ANY PERSON, UNLESS THEY ARE ACTING UNDER THE DIRECTION OF A LICENSED PROFESSIONAL ENGINEER, TO ALTER THIS DOCUMENT.

SHEET NUMBER: C-7
REVISION: 0

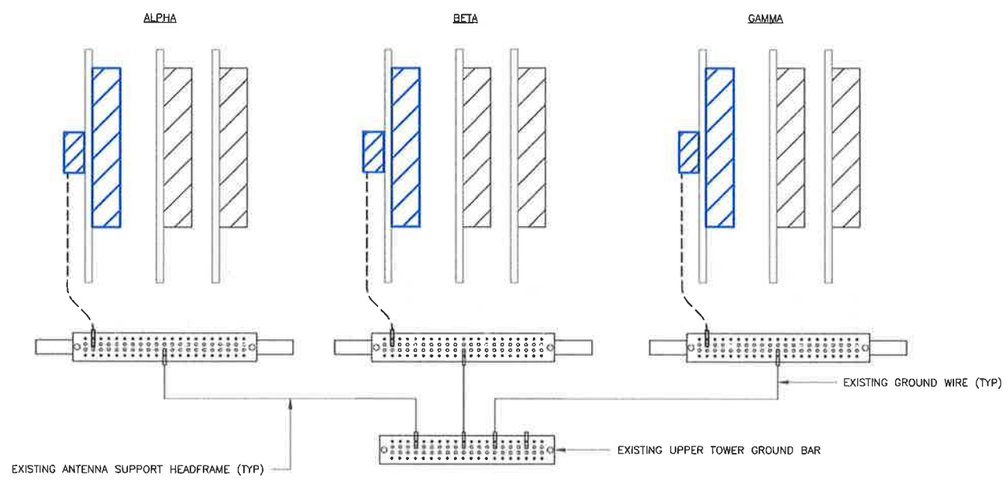

1 ANTENNA GROUNDING DIAGRAM
SCALE: NOT TO SCALE

T-Mobile
12920 SE 38TH STREET
BELLEVUE, WA 98006

BROADUS services
4 COUNTRY PLACE CIRCLE
DALWORTHINGTON GARDENS
TEXAS 76016
OFFICE: (817) 349 3449
FAX: 800 401 4234

T-MOBILE SITE NUMBER:
SL01122A
BU #: **822343**
ALPINE_SHEPHERD_HILL

651 S. BATEMAN
ALPINE, UT 84004

EXISTING 22'-0" MONOPOLE

ISSUED FOR:

REV	DATE	DRWN	DESCRIPTION	DES /QA
0	05/01/2019	WHS	FINAL	ELG

PROFESSIONAL ENGINEER
No. 9226401-2202
JACOB GORALSKI
STATE OF UTAH

5/9/2019

JACOB GORALSKI, PLLC
CONSULTING ENGINEER
JACOB GORALSKI, PLLC
UT PE# 9226401-2202
1106 COLBI ST.
KENNEDALE, TX 76060
(817) 456-2621

IT IS A VIOLATION OF LAW FOR ANY PERSON, UNLESS THEY ARE ACTING UNDER THE DIRECTION OF A LICENSED PROFESSIONAL ENGINEER, TO ALTER THIS DOCUMENT.

SHEET NUMBER: G-1
REVISION: 0

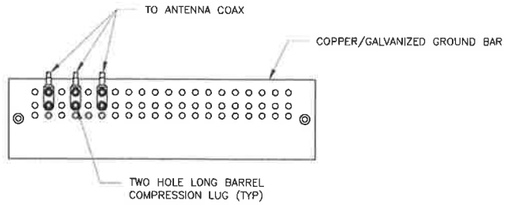

NOTES:

1. DOUBLING UP "OR STACKING" OF CONNECTIONS IS NOT PERMITTED.
2. EXTERIOR ANTIOXIDANT JOINT COMPOUND TO BE USED ON ALL EXTERIOR CONNECTIONS.
3. GROUND BAR SHALL NOT BE ISOLATED FROM TOWER. MOUNT DIRECTLY TO TOWER STEEL.

1 ANTENNA GROUND BAR DETAIL
SCALE: NOT TO SCALE

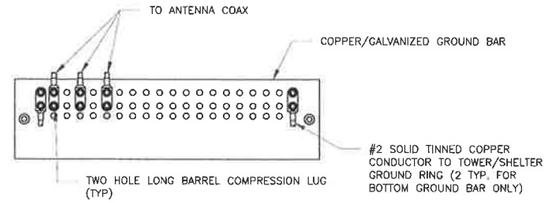

NOTES:

1. EXTERIOR ANTIOXIDANT JOINT COMPOUND TO BE USED ON ALL EXTERIOR CONNECTIONS.
2. GROUND BAR SHALL NOT BE ISOLATED FROM TOWER. MOUNT DIRECTLY TO TOWER STEEL (TOWER ONLY).
3. GROUND BAR SHALL BE ISOLATED FROM BUILDING OR SHELTER.

2 TOWER/SHELTER GROUND BAR DETAIL
SCALE: NOT TO SCALE

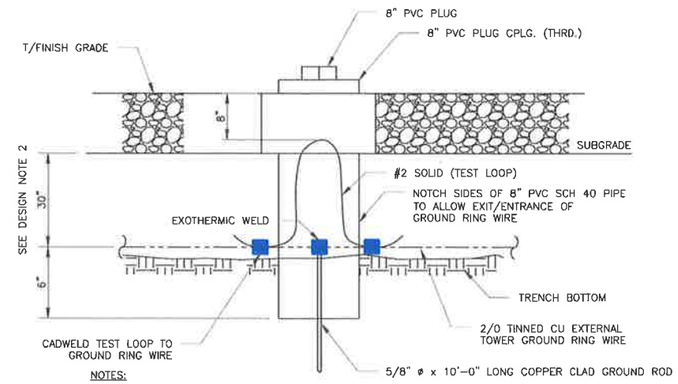

NOTES:

1. GROUND ROD SHALL BE DRIVEN VERTICALLY, NOT TO EXCEED 45 DEGREES FROM THE VERTICAL.
2. GROUND WIRE SHALL BE MIN. 30" BELOW GRADE OR 6" BELOW FROST LINE. (WHICH EVER IS GREATER) AS PER N.E.C. ARTICLE 250-50(D)

3 INSPECTION WELL DETAIL
SCALE: NOT TO SCALE

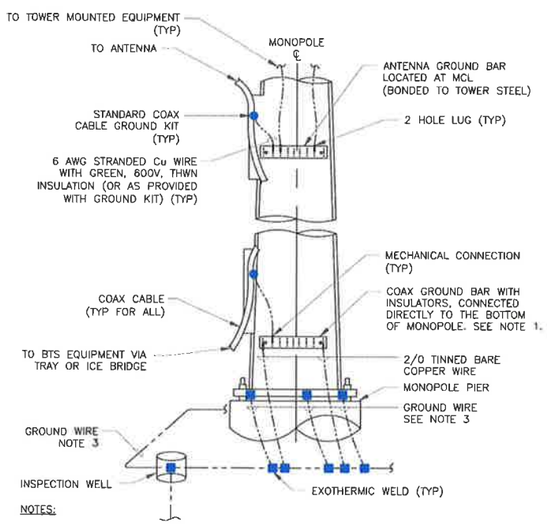

NOTES:

1. NUMBER OF GROUNDING BARS MAY VARY DEPENDING ON THE TYPE OF TOWER, ANTENNA LOCATIONS AND CONNECTION ORIENTATION. COAXIAL CABLES EXCEEDING 200 FEET ON THE TOWER SHALL HAVE GROUND KITS AT THE MIDPOINT. PROVIDE AS REQUIRED.
2. ONLY MECHANICAL CONNECTIONS ARE ALLOWED TO BE MADE TO CROWN CASTLE TOWERS. ALL MECHANICAL CONNECTIONS SHALL BE TREATED WITH AN ANTI-OXIDANT COATING.
3. ALL TOWER GROUNDING SYSTEMS SHALL COMPLY WITH THE REQUIREMENTS OF THE RECOGNIZED EDITION OF ANSI/TIA 222 AND NFPA 780.

4 TYPICAL ANTENNA CABLE GROUNDING
SCALE: NOT TO SCALE

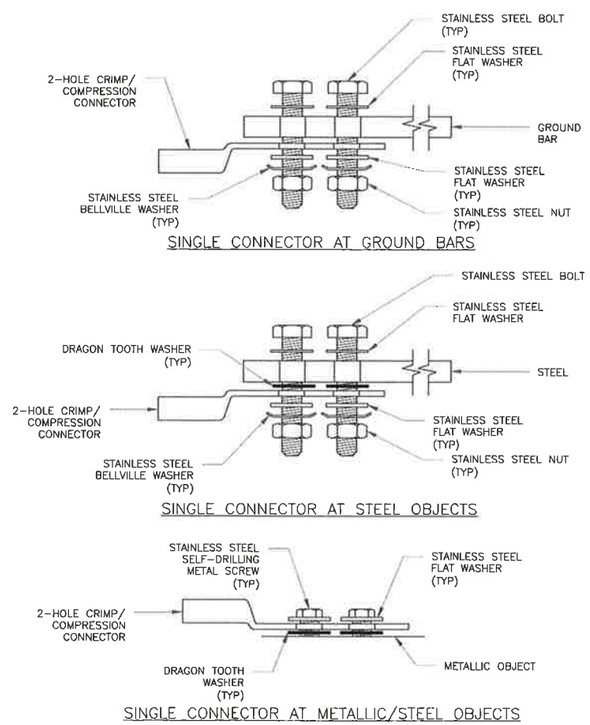

5 HARDWARE DETAIL FOR EXTERIOR CONNECTIONS
SCALE: NOT TO SCALE

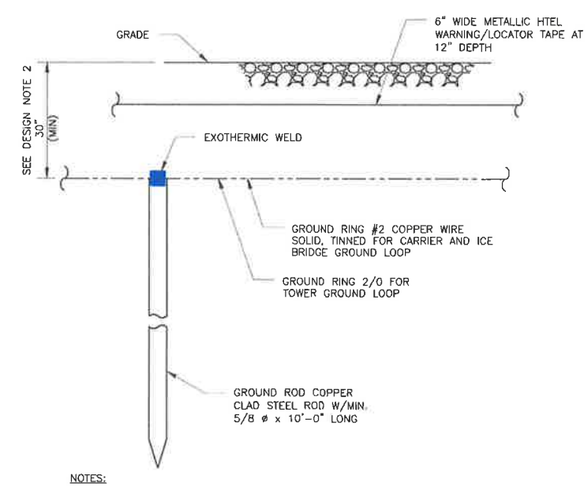

NOTES:

1. GROUND ROD SHALL BE DRIVEN VERTICALLY, NOT TO EXCEED 45 DEGREES FROM THE VERTICAL.
2. GROUND WIRE SHALL BE MIN. 30" BELOW GRADE OR 6" BELOW FROST LINE. (WHICH EVER IS GREATER) AS PER N.E.C. ARTICLE 250-50(D)

6 GROUND ROD DETAIL
SCALE: NOT TO SCALE

T-Mobile
12920 SE 38TH STREET
BELLEVUE, WA 98006

BROADUS services
4 COUNTRY PLACE CIRCLE
DALWORTHINGTON GARDENS
TEXAS 76016
OFFICE: (817) 349 3449
FAX: 800 401 4234

T-MOBILE SITE NUMBER:
SL01122A
BU #: **822343**
ALPINE_SHEPHERD_HILL

651 S. BATEMAN
ALPINE, UT 84004

EXISTING 22'-0" MONOPOLE

ISSUED FOR:

REV	DATE	DRWN	DESCRIPTION	DES./QA
0	05/01/2019	WHS	FINAL	ELG

PROFESSIONAL ENGINEER
No. 9226401-2202
JACOB GORALSKI
STATE OF UTAH

5/9/2019

JACOB GORALSKI, PLLC
CONSULTING ENGINEER
JACOB GORALSKI, PLLC
UT PE# 9226401-2202
1106 COLBI ST.
KENNEDALE, TX 76060
(817) 456-2621

IT IS A VIOLATION OF LAW FOR ANY PERSON, UNLESS THEY ARE ACTING UNDER THE DIRECTION OF A LICENSED PROFESSIONAL ENGINEER, TO ALTER THIS DOCUMENT.

SHEET NUMBER: G-2
REVISION: 0

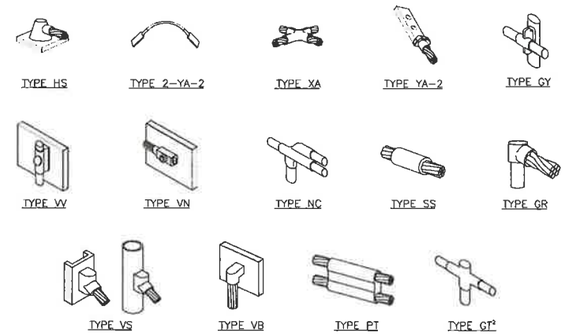

NOTE:

1. ERICO EXOTHERMIC "MOLD TYPES" SHOWN HERE ARE EXAMPLES. CONSULT WITH CONSTRUCTION MANAGER FOR SPECIFIC MOLDS TO BE USED FOR THIS PROJECT.
2. MOLD TYPE ONLY TO BE USED BELOW GRADE WHEN CONNECTING GROUND RING TO GROUND ROD.

1 CADWELD GROUNDING CONNECTIONS
SCALE: NOT TO SCALE

WIRE SIZE	BURNDY LUG	BOLT SIZE
#6 AWG GREEN INSULATED	YA6C-2TC38	3/8" - 16 NC S 2 BOLT
#2 AWG SOLID TINNED	YA3C-2TC38	3/8" - 16 NC S 2 BOLT
#2 AWG STRANDED	YA2C-2TC38	3/8" - 16 NC S 2 BOLT
#2/0 AWG STRANDED	YA26-2TC38	3/8" - 16 NC S 2 BOLT
#4/0 AWG STRANDED	YA28-2N	1/2" - 16 NC S 2 BOLT

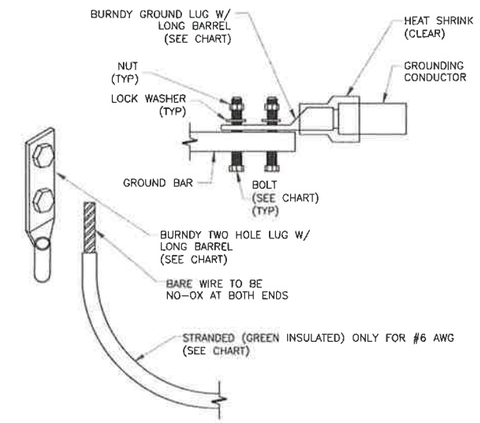

NOTES:

1. ALL GROUNDING LUGS ARE TO BE INSTALLED PER MANUFACTURER'S SPECIFICATIONS. ALL HARDWARE BOLTS, NUTS, LOCK WASHERS SHALL BE STAINLESS STEEL. ALL HARDWARE ARE TO BE AS FOLLOWS: BOLT, FLAT WASHER,GROUND BAR, GROUND LUG, FLAT WASHER AND NUT.

2 MECHANICAL LUG CONNECTION
SCALE: NOT TO SCALE

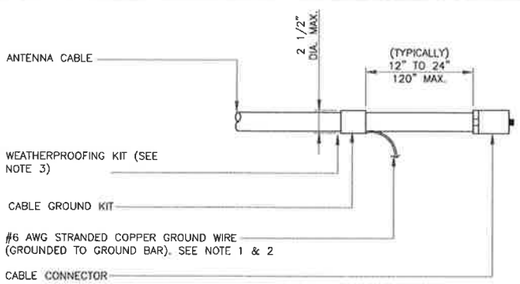

NOTES:

1. DO NOT INSTALL CABLE GROUND KIT AT A BEND AND ALWAYS DIRECT GROUND WIRE DOWN TO GROUND BAR.
2. GROUNDING KIT SHALL BE TYPE AND PART NUMBER AS SUPPLIED OR RECOMMENDED BY CABLE MANUFACTURER.
3. WEATHER PROOFING SHALL BE TWO-PART TAPE KIT, COLD SHRINK SHALL NOT BE USED.

3 CABLE GROUND KIT CONNECTION
SCALE: NOT TO SCALE

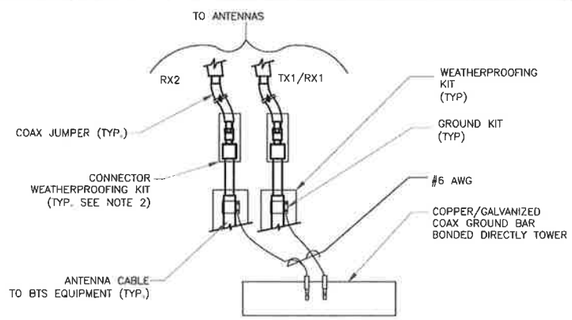

NOTES:

1. DO NOT INSTALL CABLE GROUND KIT AT A BEND AND ALWAYS DIRECT GROUND WIRE DOWN TO ANTENNA GROUND BAR.
2. WEATHER PROOFING SHALL BE TWO-PART TAPE KIT. COLD SHRINK SHALL NOT BE USED.

4 GROUND CABLE CONNECTION
SCALE: NOT TO SCALE

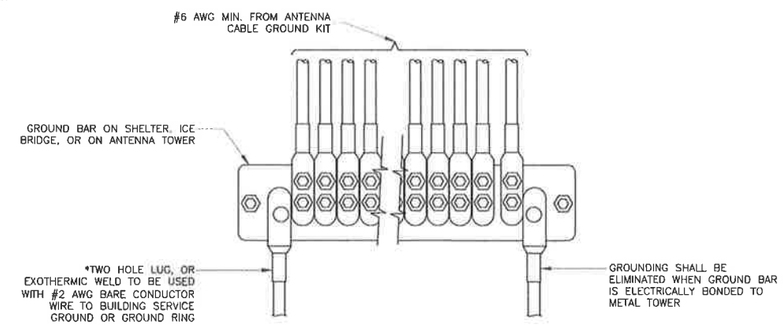

5 GROUNDWIRE INSTALLATION
SCALE: NOT TO SCALE

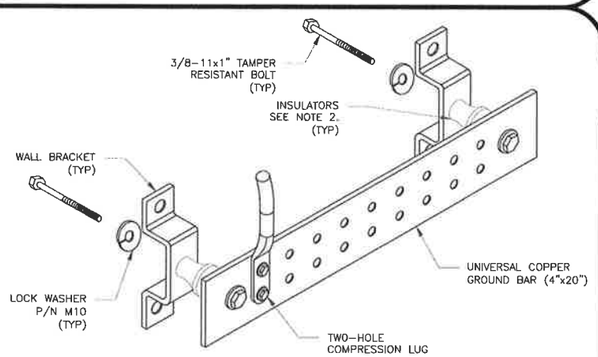

NOTES:

1. DOWN LEAD (HOME RUN) CONDUCTORS ARE NOT TO BE INSTALLED ON CROWN CASTLE TOWER, PER THE GROUNDING DOWN CONDUCTOR POLICY QAS-STD-10091. NO MODIFICATION OR DRILLING TO TOWER STEEL IS ALLOWED IN ANY FORM OR FASHION. CAD-WELDING ON THE TOWER AND/OR IN THE AIR ARE NOT PERMITTED.
2. OMIT INSULATOR WHEN MOUNTING TO TOWER STEEL OR PLATFORM STEEL USE INSULATORS WHEN ATTACHING TO BUILDING OR SHELTERS.

6 GROUND BAR DETAIL
SCALE: NOT TO SCALE

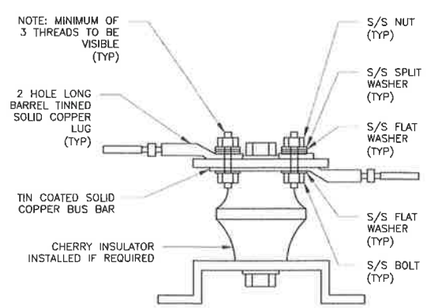

7 LUG DETAIL
SCALE: NOT TO SCALE

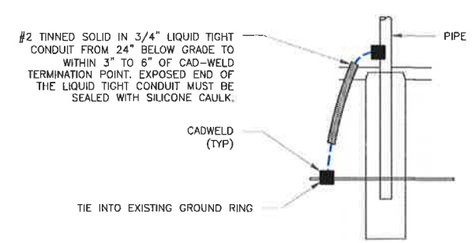

8 TRANSITIONING GROUND DETAIL
SCALE: NOT TO SCALE

T-Mobile
12920 SE 38TH STREET
BELLEVUE, WA 98006

BROADUS services
4 COUNTRY PLACE CIRCLE
DALWORTHINGTON GARDENS
TEXAS 76016
OFFICE: (817) 349 3449
FAX: 800 401 4234

T-MOBILE SITE NUMBER:
SL01122A
BU #: **822343**
ALPINE_SHEPHERD_HILL

651 S. BATEMAN
ALPINE, UT 84004

EXISTING 22'-0" MONOPOLE

ISSUED FOR:

REV	DATE	DRWN	DESCRIPTION	DES /QA
0	05/01/2019	WHS	FINAL	ELG

PROFESSIONAL ENGINEER
No. 9226401-2202
JACOB GORALSKI
STATE OF UTAH

5/9/2019

JACOB GORALSKI, PLLC
CONSULTING ENGINEER
JACOB GORALSKI, PLLC
UT PE# 9226401-2202
1106 COLBI ST.
KENNEDALE, TX 76060
(817) 456-2621

IT IS A VIOLATION OF LAW FOR ANY PERSON, UNLESS THEY ARE ACTING UNDER THE DIRECTION OF A LICENSED PROFESSIONAL ENGINEER, TO ALTER THIS DOCUMENT.

SHEET NUMBER: G-3
REVISION: 0

ALPINE PLANNING COMMISSION AGENDA

SUBJECT: **Public Hearing – Amendment to Development Code – Uses Within Buildings in Business Commercial Zone**

FOR CONSIDERATION ON: **18 June 2019**

PETITIONER: **Staff**

ACTION REQUESTED BY PETITIONER: **Receive public comments and recommend approval of proposed amendments.**

BACKGROUND INFORMATION:

Staff have reviewed the Development Code and have recommended changes to Article 3.07.080.1. Proposed change seeks to simplify and clean up the language regarding uses permitted within buildings in the Business/Commercial Zone.

STAFF RECOMMENDATION:

Receive public comment and recommend approval of amendments to Article 3.07.080.1 of the Development Code.

ALPINE CITY
ORDINANCE 2019-14

AN ORDINANCE ADOPTING AMENDMENTS TO ARTICLE 3.07.080 OF THE ALPINE CITY DEVELOPMENT CODE PERTAINING TO USES WITHIN BUILDINGS AS A SPECIAL PROVISION OF THE BUSINESS/COMMERCIAL ZONE.

WHEREAS, The Alpine City Council has deemed it in the best interest of Alpine City to amend the Business/Commercial Zone Special Provisions Ordinance to clarify the language regarding uses within buildings ; and

WHEREAS, the Alpine City Planning Commission has reviewed the proposed Amendments to the Development Code, held a public hearing, and has forwarded a recommendation to the City Council; and

WHEREAS, the Alpine City Council has reviewed the proposed Amendments to the Development Code:

NOW THEREFORE, be it ordained by the Alpine City Council, in the State of Utah, as follows: The amendments to Article 3.07.080 contained in the attached document will supersede Article 3.07.080 as previously adopted. This ordinance shall take effect upon posting.

SECTION 1: **AMENDMENT** "3.07.080 Special Provisions" of the Alpine City Municipal Code is hereby *amended* as follows:

BEFORE AMENDMENT

3.07.080 Special Provisions

1. **Uses Within Buildings**. All commercial activities and storage shall be conducted entirely within a fully enclosed building, except those uses deemed by the City to be customarily and appropriately conducted in the open, including, but not limited to, gasoline dispensing, plant nursery displays, temporarily parked automobiles in need of repair, temporary sale of Christmas trees, etc.
2. **Site Plan to Be Approved For All New Commercial Uses**. Prior to the establishment of a new commercial use or the construction of a new building, a site plan shall be submitted, reviewed and recommended by the Planning Commission and approved by the City Council. (Amended by Ord. 2004-13, 9/28/04).

3. **Off-street Parking**. Off-street parking area which requires backing from the off-street parking space onto the street right-of-way in order to exit shall not be permitted. All ingress and egress shall be by forward motion only.

   All points of ingress and egress to a commercial use or off-street parking areas shall be as shown on the site plan and shall be located not less than forty (40) feet from any intersection of public streets.

   All off-street parking areas shall be hard-surfaced and shall be bordered by a curb or other barrier.

   The number of required parking spaces and other particulars about the design and construction of off-street parking shall conform to the provisions of DCA 3.24.

4. **Trash Storage**. Adequate facilities for the disposal of solid waste shall be provided. All containers for the temporary storage and disposal solid waste material shall be of a size, type and quantity approved by the City shall be maintained in a location as shown on the Site Plan.
5. **Storage Containers**. The use of any portable unit, pod, or similar type of storage container is prohibited in this zone unless approved by the city.
6. **Surface Water Drainage to be Retained On-site**. All additional surface drainage generated as a result of development activity shall be disposed of on-site, as determined by the City Engineer.
7. **Height of Buildings**. The maximum height of any dwelling or other main building shall be thirty-four (34) feet, as determined in accordance with the provisions of DCA 3.21.080. (Ord. 96-15, 12/18/96).
8. **Landscaping Required**. As a means of mitigating safety hazards or adverse visual impacts all areas of the site not devoted to buildings or off street parking shall be landscaped. The landscaped area shall be not less than twenty (20) percent of the total area of the site. In addition to all other plan elements, the site plan shall contain a landscape plan showing the location, type and initial size of all planting materials and other landscape features, and the location of the proposed sprinkler system.
9. **Design of Commercial Structures**. Commercial buildings shall comply with the following architectural design criteria. (Preliminary architectural design drawings of all building elevations shall be presented to the Planning Commission for review).
    a. The exterior of all commercial buildings shall be finished predominantly with wood and/or brick, stucco, stone or similar materials in accordance with guidelines in the Historical/Commercial/Residential Ordinance. Pitched roofs are preferred.
    b. The architectural styles of the business district should be consistent and harmonious. The style of building design and trim should be compatible with the relatively uncomplicated rural, small town character of Alpine. Extremely irrelevant, contrived or inconsistent styles will be discouraged.

10. **Water Rights Conveyance Requirements**. Water rights shall be conveyed to the City in accordance with the provisions of DCA 3.21.070.
11. **Nuisances Prohibited**. No land or building shall be used in any manner so as to create dangerous, injurious, noxious or otherwise objectionable fire, explosive, or other hazard, noise, or vibration, smoke, dust, odor, or other form of air pollution; liquid or solid refuse or wastes; or other substance, condition or element in such a manner or in such an amount as to adversely affect the surrounding area or adjoining premises.
12. **Accessory Buildings**. All accessory buildings shall be located in accordance with the following (Ordinance 2002-13) (Amended by Ord. 2006-14, 9/12/06; Ord. 2010-03, 8/24/10):
    a. Setback from main building. Accessory buildings which are located twelve (12) feet or closer to a main building and are attached to the main building by a common roof or wall shall be considered as part of the main building and shall meet the same setbacks as the main building.
    b. Side Setback - Corner Lot, Side Abutting a Street. Accessory buildings shall be set back not less than forty (40) feet from the side lot line which abuts on a street.
    c. Front Setback. Accessory buildings shall be set back not less than forty (40) feet from the front property line.
    d. Side and Rear Setback - Interior Lot Line. Accessory buildings shall be set back no less than ten (10) feet from the rear lot line and five (5) feet from the side lot line, except that no minimum rear or side setback shall be required when all the following conditions are met:
        i. The accessory building is located more than twelve (12) feet from an existing dwelling on the same or adjacent lot;
        ii. The accessory building contains no openings on the side contiguous to the lot line;
        iii. No drainage from the roof will be discharged onto an adjacent lot;
        iv. The accessory building shall be constructed of non-combustive materials or have fire resistive walls rated at one (1) hour or more;
        v. The building will not be placed on land designated as a recorded easement, such as a utility or trail easement; and
        vi. The building will not be taller than ten (10) feet to the top of the roof line.
    e. Accessory Building Height. The maximum height of any accessory building shall be twenty (20) feet as measured form the average finished grade of the ground surface adjacent to the foundation o the structure to the top of the ridge line.
        i. Exceptions to the Height Requirement. Chimneys, flag poles, television antennas, and similar ancillary structures not used for human occupancy shall be excluded in determining height, provided that no such ancillary structure shall extend to a height in excess of fifteen (15) feet above the building.

ii. Additional Accessory Building Height. For every one (1) foot of additional height above twenty (20) feet, an additional two (2) feet of side yard and rear yard setback will be required. The maximum height of the accessory building as measured to the ridgeline shall be thirty (30) feet.

13. **Heliports**. The installation of a heliport for the use of a helicopter or other manned rotary wing aircrafts capable of vertical takeoff or landing is prohibited.

(Ord. 95-22, 8/22/95 and Ord. 2002-13, Amended by Ord. 2011-09, 5/10/11; Ord. 2014-04, 3/25/14)

AFTER AMENDMENT

3.07.080 Special Provisions

1. **Uses Within Buildings**. All commercial activities and storage shall be conducted entirely within a fully enclosed building, except those uses deemed by the City to be customarily and appropriately conducted in the open, including~~, but not limited to,~~ gasoline dispensing, plant nursery displays, temporarily parked automobiles in need of repair, and temporary sale of Christmas trees.~~, etc.~~
2. **Site Plan to Be Approved For All New Commercial Uses**. Prior to the establishment of a new commercial use or the construction of a new building, a site plan shall be submitted, reviewed and recommended by the Planning Commission and approved by the City Council. (Amended by Ord. 2004-13, 9/28/04).
3. **Off-street Parking**. Off-street parking area which requires backing from the off-street parking space onto the street right-of-way in order to exit shall not be permitted. All ingress and egress shall be by forward motion only.

   All points of ingress and egress to a commercial use or off-street parking areas shall be as shown on the site plan and shall be located not less than forty (40) feet from any intersection of public streets.

   All off-street parking areas shall be hard-surfaced and shall be bordered by a curb or other barrier.

   The number of required parking spaces and other particulars about the design and construction of off-street parking shall conform to the provisions of DCA 3.24.

4. **Trash Storage**. Adequate facilities for the disposal of solid waste shall be provided. All containers for the temporary storage and disposal solid waste material shall be of a size, type and quantity approved by the City shall be maintained in a location as shown on the Site Plan.
5. **Storage Containers**. The use of any portable unit, pod, or similar type of storage container is prohibited in this zone unless approved by the city.

6. **Surface Water Drainage to be Retained On-site**. All additional surface drainage generated as a result of development activity shall be disposed of on-site, as determined by the City Engineer.
7. **Height of Buildings**. The maximum height of any dwelling or other main building shall be thirty-four (34) feet, as determined in accordance with the provisions of DCA 3.21.080. (Ord. 96-15, 12/18/96).
8. **Landscaping Required**. As a means of mitigating safety hazards or adverse visual impacts all areas of the site not devoted to buildings or off street parking shall be landscaped. The landscaped area shall be not less than twenty (20) percent of the total area of the site. In addition to all other plan elements, the site plan shall contain a landscape plan showing the location, type and initial size of all planting materials and other landscape features, and the location of the proposed sprinkler system.
9. **Design of Commercial Structures**. Commercial buildings shall comply with the following architectural design criteria. (Preliminary architectural design drawings of all building elevations shall be presented to the Planning Commission for review).
    a. The exterior of all commercial buildings shall be finished predominantly with wood and/or brick, stucco, stone or similar materials in accordance with guidelines in the Historical/Commercial/Residential Ordinance. Pitched roofs are preferred.
    b. The architectural styles of the business district should be consistent and harmonious. The style of building design and trim should be compatible with the relatively uncomplicated rural, small town character of Alpine. Extremely irrelevant, contrived or inconsistent styles will be discouraged.
10. **Water Rights Conveyance Requirements**. Water rights shall be conveyed to the City in accordance with the provisions of DCA 3.21.070.
11. **Nuisances Prohibited**. No land or building shall be used in any manner so as to create dangerous, injurious, noxious or otherwise objectionable fire, explosive, or other hazard, noise, or vibration, smoke, dust, odor, or other form of air pollution; liquid or solid refuse or wastes; or other substance, condition or element in such a manner or in such an amount as to adversely affect the surrounding area or adjoining premises.
12. **Accessory Buildings**. All accessory buildings shall be located in accordance with the following (Ordinance 2002-13) (Amended by Ord. 2006-14, 9/12/06; Ord. 2010-03, 8/24/10):
    a. Setback from main building. Accessory buildings which are located twelve (12) feet or closer to a main building and are attached to the main building by a common roof or wall shall be considered as part of the main building and shall meet the same setbacks as the main building.
    b. Side Setback - Corner Lot, Side Abutting a Street. Accessory buildings shall be set back not less than forty (40) feet from the side lot line which abuts on a street.
    c. Front Setback. Accessory buildings shall be set back not less than forty (40) feet from the front property line.
    d. Side and Rear Setback - Interior Lot Line. Accessory buildings shall be set back no less than ten (10) feet from the rear lot line and five (5) feet from the side lot

line, except that no minimum rear or side setback shall be required when all the following conditions are met:

i. The accessory building is located more than twelve (12) feet from an existing dwelling on the same or adjacent lot;
ii. The accessory building contains no openings on the side contiguous to the lot line;
iii. No drainage from the roof will be discharged onto an adjacent lot;
iv. The accessory building shall be constructed of non-combustive materials or have fire resistive walls rated at one (1) hour or more;
v. The building will not be placed on land designated as a recorded easement, such as a utility or trail easement; and
vi. The building will not be taller than ten (10) feet to the top of the roof line.

e. Accessory Building Height. The maximum height of any accessory building shall be twenty (20) feet as measured form the average finished grade of the ground surface adjacent to the foundation o the structure to the top of the ridge line.

i. Exceptions to the Height Requirement. Chimneys, flag poles, television antennas, and similar ancillary structures not used for human occupancy shall be excluded in determining height, provided that no such ancillary structure shall extend to a height in excess of fifteen (15) feet above the building.
ii. Additional Accessory Building Height. For every one (1) foot of additional height above twenty (20) feet, an additional two (2) feet of side yard and rear yard setback will be required. The maximum height of the accessory building as measured to the ridgeline shall be thirty (30) feet.

13. **Heliports**. The installation of a heliport for the use of a helicopter or other manned rotary wing aircrafts capable of vertical takeoff or landing is prohibited.

(Ord. 95-22, 8/22/95 and Ord. 2002-13, Amended by Ord. 2011-09, 5/10/11; Ord. 2014-04, 3/25/14)

PASSED AND ADOPTED BY THE ALPINE CITY COUNCIL
_____.

	AYE	NAY	ABSENT	ABSTAIN
Lon Lott	_____	_____	_____	_____
Kimberly Bryant	_____	_____	_____	_____
Carla Merrill	_____	_____	_____	_____
Ramon Beck	_____	_____	_____	_____
Jason Thelin	_____	_____	_____	_____

Presiding Officer

_____
Troy Stout, Mayor, Alpine City

Attest

_____
Charmayne G. Warnock, City Recorder Alpine City

ALPINE PLANNING COMMISSION AGENDA

SUBJECT: Setback Exception – Proposed Site Plan in Business/Commercial Zone

FOR CONSIDERATION ON: 18 June 2019

PETITIONER: Paul Anderson

ACTION REQUESTED BY PETITIONER: Review and recommend approval of the proposed setback exceptions.

BACKGROUND INFORMATION:

The petitioner is seeking an exception to the setback requirements for a commercial structure in the Business/Commercial Zone. The property is an odd shaped lot adjacent to Dry Creek and the Main Street Bridge.

The petitioner is seeking two different setback exceptions: first, a front-setback of 15 feet from the front property line on Main Street; and second, a zero side-setback for the north property boundary bordering Dry Creek. The petitioner has stated that without the exceptions it would be difficult to place a building on the odd shaped lot.

The Development Code states that the Planning Commission may grant exceptions to the setback requirements for the Business/Commercial and Gateway Historic Zones.

Article 3.07.050.2

> *In commercial developments adjacent to other commercial areas, the side yard and rear yard setbacks will be not less than 20 feet unless recommended by the Planning Commission and approved by the City Council where circumstances justify.*

Article 3.11.040.3.e

> *The Planning Commission may recommend exceptions to the Business Commercial Zone requirements regarding parking, building height, signage, setbacks and use if it finds that the plans proposed better implement the design guidelines to the City Council for approval.*

Model Motions:

Review and consider approving the proposed setback exceptions.

Sample Motion to Approve:
I motion to approve the setback exceptions as proposed.

Sample Motion to Deny:
I motion that the proposed setback exception be denied based on the following:

- ***Insert Finding***

Proposed Building Site
115'
Parking
Access
Parking
S00-38-00W – 1547 ft
N00-38-00E – 115.15 ft
S89-14-11E – 138.68 ft
N89-14-41W – 138.68 ft
N00-38-00E – 67.17 ft
N89-01-00W – 86.36 ft
S00-58-00W – 91.68 ft
S54-43-00E – 218.32 ft
N54-43-00W – 219.48 ft
S54-43-00E – 75.97 ft
S00-38-00W – 3.43 ft
37.202.0003
37.202.0001
37.271.0001
55.649.0003
11.023.0502

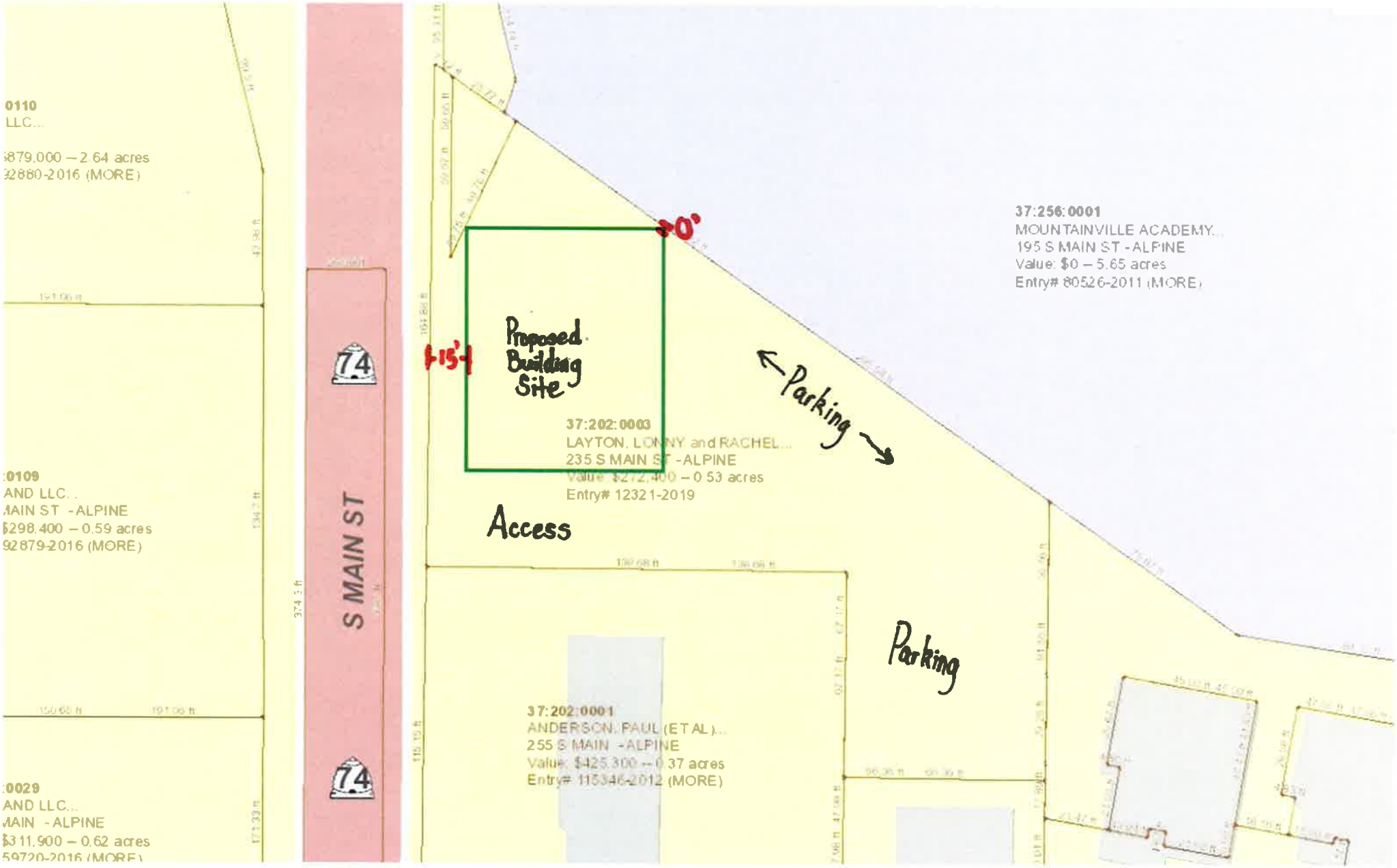
0110
LLC...
879,000 – 2.64 acres
2880-2016 (MORE)
0109
AND LLC. .
AIN ST - ALPINE
298,400 – 0.59 acres
92879-2016 (MORE)
0029
AND LLC...
AIN - ALPINE
311,900 – 0.62 acres
59720-2016 (MORE)
S MAIN ST
74
74
37:256:0001
MOUNTAINVILLE ACADEMY...
195 S MAIN ST - ALPINE
Value: $0 – 5.65 acres
Entry# 80526-2011 (MORE)
0'
15'
Proposed Building Site
Parking
37:202:0003
LAYTON, LONNY and RACHEL...
235 S MAIN ST - ALPINE
Value: $272,400 – 0.53 acres
Entry# 12321-2019
Access
Parking
37:202:0001
ANDERSON, PAUL (ET AL)...
255 S MAIN - ALPINE
Value: $425,300 – 0.37 acres
Entry# 115346-2012 (MORE)

ALPINE PLANNING COMMISSION AGENDA

SUBJECT: Planning Commission Minutes June 4, 2019

FOR CONSIDERATION ON: 18 June 2019

PETITIONER: Staff

ACTION REQUESTED BY PETITIONER: Approve Minutes

BACKGROUND INFORMATION:

Minutes from the June 4, 2019 Planning Commission Meeting.

STAFF RECOMMENDATION:

Review and approve the Planning Commission Minutes.

ALPINE CITY PLANNING COMMISSION MEETING
Alpine City Hall, 20 North Main, Alpine, UT
June 4, 2019

I. GENERAL BUSINESS

A. Welcome and Roll Call: The meeting was called to order at 7:00 pm by Chairman David Fotheringham. The following were present and constituted a quorum:

Chairman: David Fotheringham
Commission Members: Alan MacDonald, John MacKay, Jane Griener, Jessica Smuin
Excused: Bryce Higbee, Sylvia Christiansen
Staff: Austin Roy, Marla Fox
Others: Mike Kendig, Monica Lawlis

B. Prayer/Opening Comments: John MacKay
C. Pledge of Allegiance: Mike Kendig

II. PUBLIC COMMENT
There were no public comments.

III. ACTION ITEMS

A. Public Hearing – Amendment to Development Code – Streets and Street Requirements

Austin Roy reviewed the Development Code and recommended changes to the Streets and Street Requirements found in the Subdivision Ordinance. He explained that the proposed change would take the Wildland Urban Interface Street Requirements and place them with the other Streets and Street Requirements found in the Subdivision Ordinance. He clarified that the language was not new; instead, it was just being moved from one part of the Development Code to another part of the Development Code, so that it was located with the other street requirements. The section stated that any development that was in the Wildland Urban Interface area was required to have two working accesses with the road being twenty feet in width and some additional road grade requirements.

In response to David Fotheringham's question as to why the change was being proposed, Austin Roy explained that when the Fire Chief proposed a new grading system to determine if fire sprinklers were needed, he noted that a lot of the City's Wildland Interface language was removed from the Development Code. Subsequent to that time, the Fire Chief realized that the City still needed this language in the Code, so it was being added back in.

In response to Jane Griener's question regarding whether the Planning Commission had removed this language, Austin Roy replied in the affirmative. He added that the same night the Fire Chief came, the Planning Commission had recommended adoption of his new guide, but also repealing certain sections of the Wildland Urban Interface. Austin Roy said that the reason the Fire Chief did this was that his new guide covered a lot of what was in the Code, so it would have been

DRAFT

redundant to cover it two times. The Fire Chief inadvertently removed this section which was not covered in the guide, so it needed to be added back into the Code.

David Fotheringham opened the Public Hearing. No comments were made. David Fotheringham closed the Public Hearing.

A motion was made by Alan MacDonald to recommend approval of an amendment to Article 4.07.040 of the Development Code. The motion was seconded by Jane Griener. Discussion followed.

Jane Griener sought to clarify that the amendment was word for word what had already been in the Code before, and that the change was just the location of the language. Austin Roy said that it was not word for word because there was one small change:

Previous language in 15.a: *Urban Wildland Interface*

Proposed language in 15.a: *Wildland Urban Interface*

The change was being proposed because it was how the Fire Code designated the area.

Jane Griener asked for further clarification of what had changed about the grading system for the Wildland Urban Interface. Austin Roy explained that with the new system the Fire Chief had put in place, the line that indicated the area on a map had been erased. Instead, each home would now be graded and scored. The Fire Chief would look at each lot and the circumstances of the lot and determine if that lot had to follow the Wildland Urban Interface guidelines. Jane Griener said the line around the City was still there because there were other things that applied to the line besides fire sprinklers. Austin Roy said the line was mostly used for sprinklers, but the City still had to designate part of the town as the Wildland Interface. Austin Roy clarified that the new way the Fire Chief was proposing to proceed was to update the line annually or bi-annually by rearranging the boundary between what is the Wildland Interface and what was the regular City. He added that the line would no longer be used to determine whether fire sprinklers would be required.

Austin Roy said the line would still be used to determine if a development would be required to have two accesses depending on which side of the line it's on. He said the line would move with the changing city, as determined by the Fire Chief, and there would be criteria such as a certain percentage of vegetation and slope terrain. He said that under the previous methodology, the line was arbitrarily chosen. He said because the City changed every month and every year, this was something that should be updated on a regular basis. He noted that it had not been changed in about 15 or 20 years. Jane Griener asked to clarify that the boundary line changes would be determined by the Fire Chief without involving the Planning Commission. Austin Roy confirmed this would be the case. He clarified that the Fire Chief's proposed boundary line changes would still have to go to the Planning Commission for consideration and to the City Council for approval.

DRAFT

Jessica Smuin sought clarification on the reference to secondary access and the paving of the secondary access. She said the City had a couple of developments that did not have a paved secondary access at this point, so she wanted to know if the same wording would be a triggering event because of the updating of the Code. She said she wasn't able to contact the City Attorney, David Church, to find out from a legal perspective if this would be a triggering event and cause something to change.

Austin Roy said that change would not trigger requirements for people that were currently out of compliance with the City's Code to have to update their development or road to be in compliance because they would be grandfathered in. A house that was built in the 1970s did not have to be updated to comply with the new building codes, so the same concept would be applicable in this case.

MOTION: Alan Macdonald moved to recommend approval of Amendments to Article 4.07.404 of the Development Code.

Jane Griener seconded the motion. There were 5 Ayes and 0 Nays (recorded below). The motion passed.

Ayes:	**Nays:**
Alan MacDonald	None
John MacKay	
David Fotheringham	
Jane Griener	
Jessica Smuin	

B. Public Hearing – Amendment to Development Code – Conditional Uses in the Business/Commercial Zone

Austin Roy noted that this proposal had come to the Planning Commission on May 21, 2019, but it had been continued so that Staff could create language to establish standards for a dog kennel to be a conditional use in the Business Commercial Zone. Accordingly, Austin Roy said that Staff had looked at what other cities had in place to inform their recommended proposal. He reiterated that the proposal would allow a dog kennel or boarding facility within the City's Business Commercial Zone if it met the specified conditions.

This proposal was the result of a request by the Alpine Animal Hospital to add a dog boarding kennel next to the hospital.

Alan MacDonald asked how Staff had developed the proposed language. Austin Roy said Staff looked at other municipalities around the Wasatch Front. He said there weren't many to look at, so they looked at language from various cities in California as well. Austin Roy said that cities that had adopted such regulations included rigorous enforcement of the Code by their respective Police Departments, which would inspect the facilities. For Alpine City, adaptations would be necessary, so Staff identified the key issues that needed to be monitored. Those items included

DRAFT

odors, noise, nuisance things such as rodents and flies, and proximity to other structures. He said Staff didn't find a condition that this type of business had to be tied to a veterinary clinic. He said that such a requirement would be very restrictive. Austin Roy added that a lot of the suggested conditions came from the proposal from the owners of the Alpine Animal Hospital. For example, they were the ones who had requested twenty-five individual dog kennels, which would translate into a maximum of twenty-five dogs at one time in the facility. One of the owners, Mike Kendig, clarified that the number of dogs per kennel would vary because a family might bring two dogs, which could potentially be kept in just one kennel. Mike Kendig added that they would like to have four rooms so if a family had three dogs to board, they could have a room to themselves. He confirmed they wouldn't have more than twenty-five kennels.

In response to David Fotheringham's question as to whether a public hearing was needed, Austin Roy said that this item had been continued from the previous meeting, at which time a public hearing had taken place. Therefore, a public hearing was not necessary for this meeting.

MOTION: John Mackay moved to recommend approval of the proposed amendments to Article 3.07.030 of the Alpine City Development Code Pertaining to Conditional Uses in the Business/Commercial Zone, with the language provided by Staff, regarding dog kennels/boarding to be allowed as a Conditional Use in the business Commercial Zone.

Alan MacDonald seconded the motion.

David Fotheringham said that two things that had not been addressed in the proposed language were clean drinking water and adequate ventilation for the animals. He then asked if those items should be included in the Code. Austin Roy said Staff had seen those items as part of their review process, but they didn't add clean water in the Code because they thought that issue would be handled by the Health Department. He noted that the proposed language could be adopted as is, or it could be modified, as recommended by the Planning Commission.

Alan MacDonald observed that the customers would most likely ask if clean water and proper ventilation would be provided, so the market forces would come to bear on those issues.

In response to the question on how complaints by neighbors would be handled, Austin Roy said it would depend on what the complaint was. It would be handled by either the Code Enforcement Office or by Lone Peak Police Department, which had an Animal Control Unit within their ranks to deal with animal issues.

Discussion took place on 13.a with regard to the possibility of establishing a reasonable standard to determine what would constitute an adverse impact. For example, simply hearing a dog bark or smelling an undesirable odor might elicit a complaint that someone had experienced an adverse impact.

John MacKay said he would like to see language in 13.c that was more specific about the number of animals that would be allowed and not just the number of kennels that would be allowed. It was noted that the market would help control that issue as people would read reviews of the business.

Jessica Smuin said she would like to see language added back in that this type of business would have to be attached to a licensed veterinarian because it would control the area that a kennel/boarding facility could be located.

Mike Kendig and Monica Lawlis were invited to answers questions posed by the Planning Commission. In response to the statement about limiting the number of dogs at a facility such as the Alpine Pet Lodge, Mike Kendig said having dogs at the Alpine Animal Hospital could impact the number of dogs he had next door. Mike Kendig clarified that the hospital had separate facilities for animals under his care at that facility. David Fotheringham said that since the hospital was not part of the dog kennel, the census for the two facilities would be separate.

Discussion ensued on a potential scenario in which multiple families had multiple dogs being boarded at the facility. That would raise the census to well over twenty-five. Austin Roy then asked how enforcing the number of dogs would work.

With regard to the number of animals that might be boarded at one time, Mike Kendig said they would be full at holiday times. His primary concern was quality of care, not quantity of dogs being boarded. He viewed his business as "luxury boarding," so the dog owners would have high expectations of the type of care their dogs received. It was noted that although the Kendigs would have a high standard of care, someone in the future might establish a similar business and possibly not have the same commitment to quality as the Kendigs had. Therefore, the Code would have to take into account such potential scenarios.

In response to Alan MacDonald's question as to how many is too many, Mike Kendig said it would be hard to determine how many animals would be too many because dogs varied by size and temperament. In addition, some families had multiple dogs that needed to stay together.

Monica Lawlis said they were more concerned with the health and care of the dogs. She said they only had so much time and staff to feed, walk, and care for the dogs.

In response to the question about the standard size of a dog kennel run, it was noted that the United States Department of Agriculture (USDA) had requirements under the Animal Welfare Act (AWA). There were also restrictions on the number of dogs allowed per kennel. Miscellaneous discussion ensued on the number of kennels and dogs that would be allowed. Jane Griener said she would like language that listed a limit on the amount of kennels but also a limit on the number of dogs at one time as well.

Discussion took place on how to modify the original motion for this item.

MOTION: Alan MacDonald moved to amend the original motion to include the following language:

1. *Amend Sub Part A to include the word "unreasonable" before adverse impact on nearby structures and/or property;*

2. *Amend Sub Part C to say "Shall have no more than 25 individual dog runs, with total dogs not to exceed 1.5 X the number of kennel runs";*
3. *Add a new Sub Part D that would say "No more than one dog shall share a kennel run without the owner's permission";*
4. *Current D through I will become E through J.*
5. *Add Sub Part K that would say, "Must have an active DVM relationship to immediately treat a sick or injured animal requiring medical attention."*

Jane Griener seconded the motion. There were 5 Ayes and 0 Nays (recorded below). The motion passed.

Ayes:	**Nays:**
Alan MacDonald	none
John MacKay	
David Fotheringham	
Jane Griener	
Jessica Smuin	

IV. Communications

Jane Griener asked about the food trucks. Austin Roy said they had moved to Creekside Park and would be there on Monday nights.

V. APPROVAL OF PLANNING COMMISSION MINUTES: May 21, 2019

MOTION: Jane Griener moved to approve the minutes for May 21, 2019, as written.

John MacKay seconded the motion. There were 5 Ayes and 0 Nays (recorded below). The motion passed.

Ayes:	**Nays:**
Alan MacDonald	None
John MacKay	
David Fotheringham	
Jane Griener	
Jessica Smuin	

The meeting was adjourned at 8:03 pm.

DRAFT