ALPINE CITY PLANNING COMMISSION MEETING

NOTICE is hereby given that the **PLANNING COMMISSION** of Alpine City, Utah will hold an **Electronic Public Meeting** on **Tuesday, October 6, 2020 at 7:00 pm.** Meeting will be anchored from Alpine City Hall, 20 North Main, Alpine, Utah.

The public may view and participate in the meeting via the **Alpine City YouTube Channel or attend in person at City Hall**. A direct link to the channel can be found on the home page of the Alpine City website: **alpinecity.org**

Public Comment for a Public Hearing on the agenda may be submitted to **admin@alpinecity.org by 5:00 pm the day of the meeting or given in person at City Hall**.

I. GENERAL BUSINESS

A. Welcome and Roll Call: Jane Griener
B. Prayer/Opening Comments: Ethan Allen
C. Pledge of Allegiance: John Mackay

II. PUBLIC COMMENT

Any person wishing to comment on any item not on the agenda may address the Planning Commission. Comments may be submitted to admin@alpinecity.org by 5:00 PM the day of the meeting or in person at City Hall.

III. ACTION ITEMS

A. Public Hearing – Res. No. 2020-15 Trail Master Plan
Planning Commission to hear public comment and make recommendation to City Council.

B. Public Hearing – Ord. No. 2020-18 Written Notification of Zone Change
Planning Commission to hear public comment and make recommendation to City Council.

C. Public Hearing – Res. No. 2020-16 Construction Standards Specifications and Details
Planning Commission to hear public comment and make recommendation to City Council.

D. Discussion – Ord. No. 2020-19 Outdoor Lighting
Planning Commission will discuss proposed ordinance.

E. Discussion – Ord. No. 2020-20 Garage Doors
Planning Commission will discuss proposed ordinance.

F. Discussion – Ord. No. 2020-21 Trail Committee Ordinance
Planning Commission will discuss proposed ordinance.

G. Discussion – Training Materials
Planning Commission will discuss proposed training materials.

IV. COMMUNICATIONS

V. APPROVAL OF PLANNING COMMISSION MINUTES: September 15, 2020

ADJOURN

Chair Jane Griener
October 1, 2020

THE PUBLIC IS INVITED TO ATTEND ALL PLANNING COMMISSION MEETINGS. If you need a special accommodation to participate in the meeting, please call the City Recorder's Office at 801-756-6347 ext. 5.

CERTIFICATION OF POSTING. The undersigned duly appointed recorder does hereby certify that the above agenda notice was posted at Alpine City Hall, 20 North Main, Alpine, UT. It was also sent by e-mail to The Daily Herald located in Provo, UT a local newspaper circulated in Alpine, UT. This agenda is also available on the City's web site at www.alpinecity.org and on the Utah Public Meeting Notices website at www.utah.gov/pmn/index.html.

PUBLIC MEETING AND PUBLIC HEARING ETIQUETTE

Please remember all public meetings and public hearings are now recorded.

- All comments **must** be recognized by the Chairperson and addressed through the microphone.
- When speaking to the Planning Commission, please stand, speak slowly and clearly into the microphone, and state your name and address for the recorded record.
- Be respectful to others and refrain from disruptions during the meeting. Please refrain from conversation with others in the audience as the microphones are very sensitive and can pick up whispers in the back of the room.
- Keep comments constructive and not disruptive.
- Avoid verbal approval or dissatisfaction of the ongoing discussion (i.e., booing or applauding).
- Exhibits (photos, petitions, etc.) given to the City become the property of the City.
- Please silence all cellular phones, beepers, pagers or other noise making devices.
- Be considerate of others who wish to speak by limiting your comments to a reasonable length, and avoiding repetition of what has already been said. Individuals may be limited to two minutes and group representatives may be limited to five minutes.
- Refrain from congregating near the doors or in the lobby area outside the council room to talk as it can be very noisy and disruptive. If you must carry on conversation in this area, please be as quiet as possible. (The doors must remain open during a public meeting/hearing.)

Public Hearing vs. Public Meeting

If the meeting is a **public hearing**, the public may participate during that time and may present opinions and evidence for the issue for which the hearing is being held. In a public hearing there may be some restrictions on participation such as time limits.

Anyone can observe a **public meeting**, but there is no right to speak or be heard there - the public participates in presenting opinions and evidence at the pleasure of the body conducting the meeting.

ALPINE PLANNING COMMISSION AGENDA

SUBJECT: Public Hearing – Resolution 2020-18 Trail Master Plan

FOR CONSIDERATION ON: 6 October 2020

PETITIONER: Staff

ACTION REQUESTED BY PETITIONER: Hold a public hearing, review and recommend approval of the updated Trail Master Plan.

BACKGROUND INFORMATION:

The Trail Master Plan is need of an update. Many of the proposed trails shown on the currently adopted Trail Master Plan have been built and should be updated to show accordingly on the Trail Master Plan.

STAFF RECOMMENDATION:
Recommend approval of the Trail Master Plan as proposed.

SAMPLE MOTION TO APPROVE:
I motion to recommend that the Trail Master Plan be approved as proposed.

SAMPLE MOTION TO APPROVE WITH CONDITIONS:
I motion to recommend that the Trail Master Plan be approved with the following conditions/changes:

- ***Insert Finding***

SAMPLE MOTION TO TABLE/DENY:
I motion to recommend that the Trail Master Plan be tabled/denied based on the following:

- ***Insert Finding***

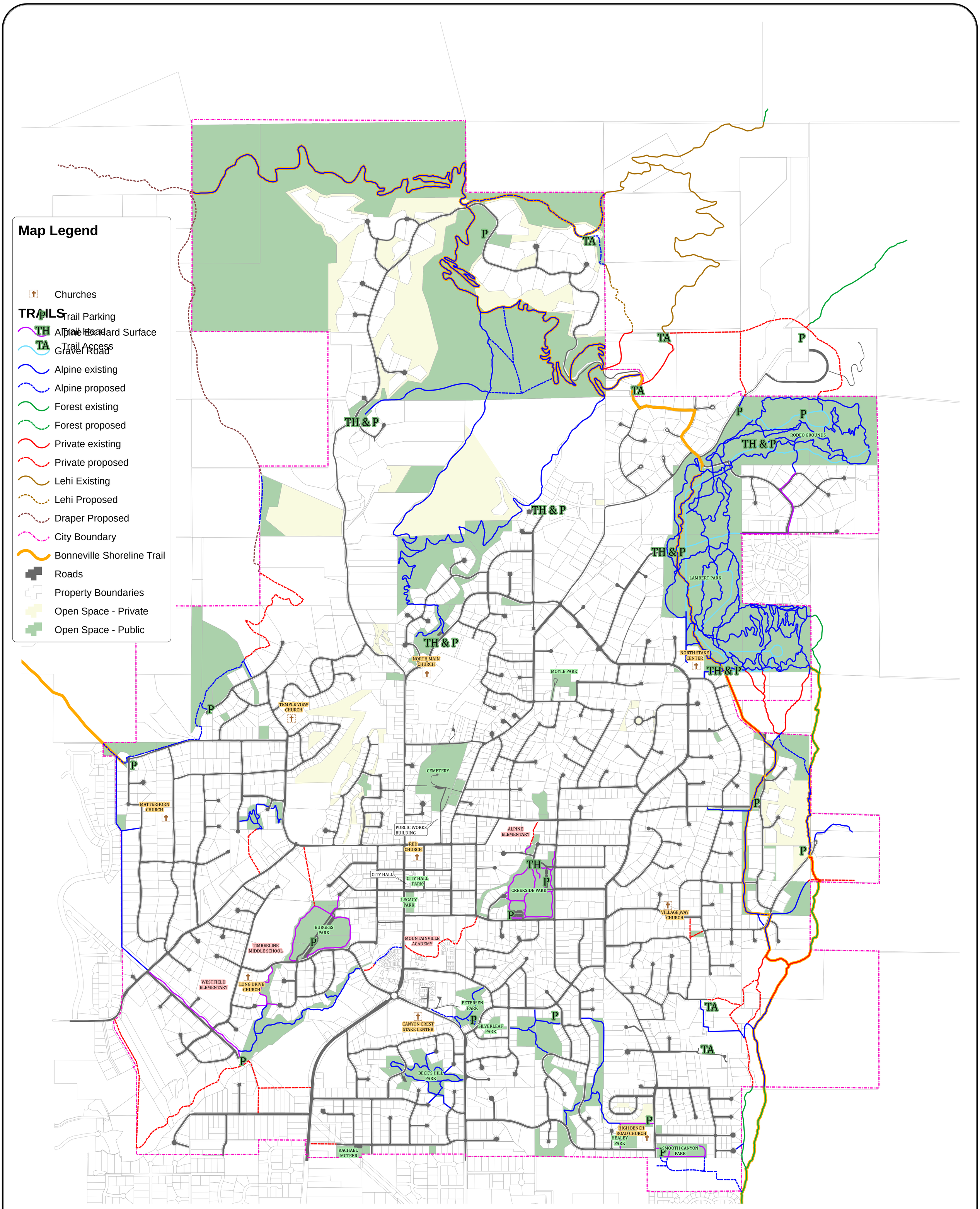

** ALL TRAILS ARE SHOWN AS A POINT "A" TO POINT "B" AND AT TIME OF DEVELOPMENT WILL NEED TO BE ENGINEERED AND FLAGGED FOR APPROVAL **

ALPINE CITY
ESTABLISHED 1850

Trail Master Plan

PROPOSED 2020

RESOLUTION NO. R2020-15

ADOPTING THE TRAIL MASTER PLAN

A RESOLUTION ADOPTING AN UPDATED TRAIL MASTER PLAN FOR THE CITY OF ALPINE.

WHEREAS, the Planning Commission of Alpine City has certified a Trail Master Plan to the City Council, and

WHEREAS, the City Council deems it to be in the best interest and general welfare of the City of Alpine to adopt said Trail Master Plan;

THEREFORE, be it resolved by the City Council of the City of Alpine that the Trail Master Plan dated October 13, 2020 is hereby adopted as the Trail Master Plan of the City of Alpine.

This resolution shall become effective immediately upon its passage.

Dated this _____ day of October 2020.

_____
TROY STOUT, MAYOR

ATTEST:

_____
BONNIE COOPER, CITY RECORDER

ALPINE PLANNING COMMISSION AGENDA

SUBJECT: **Public Hearing – Ordinance 2020-18 Written Notification of Zone Change**

FOR CONSIDERATION ON: **6 October 2020**

PETITIONER: **Staff**

ACTION REQUESTED BY PETITIONER: **Hold a public hearing, review and recommend approval of the proposed ordinance.**

BACKGROUND INFORMATION:

State Code requires that a zone change shall be noticed in writing at least ten (10) days before a public hearing. The Alpine City Development Code contradicts this and says seven (7) days. Staff have addressed this issue with the City Attorney and have been informed that the City Code cannot be less restrictive than the State Code. The proposed ordinance would fix this issue so that City Code matches State Code.

STAFF RECOMMENDATION:
Recommend approval of Ordinance 2020-18 as proposed.

SAMPLE MOTION TO APPROVE:
I motion to recommend that Ordinance 2020-18 be approved as proposed.

SAMPLE MOTION TO APPROVE WITH CONDITIONS:
I motion to recommend that Ordinance 2020-18 be approved with the following conditions/changes:

- ***Insert Finding***

SAMPLE MOTION TO TABLE/DENY:
I motion to recommend that Ordinance 2020-18 be tabled/denied based on the following:

- ***Insert Finding***

ALPINE CITY
ORDINANCE 2020-18

AN ORDINANCE ADOPTING AMENDMENTS TO ARTICLE 3.01.090 OF THE ALPINE CITY DEVELOPMENT CODE PERTAINING TO WRITTEN NOTIFICATION REQUIREMENTS OF AMENDMENTS TO THE ZONING MAP.

WHEREAS, The City Council of Alpine, Utah has deemed it in the best interest of Alpine City to amend the ordinance to set forth the requirements for written notification of amendments to the zoning map; and

WHEREAS, the Alpine City Planning Commission has reviewed the proposed Amendments to the Development Code, held a public hearing, and has forwarded a recommendation to the City Council; and

WHEREAS, the Alpine City Council has reviewed the proposed Amendments to the Development Code:

NOW THEREFORE, be it ordained by the Council of Alpine City, in the State of Utah, as follows: The amendments to Article 3.01.090 contained in the attached document will supersede Article 3.01.090 as previously adopted. This ordinance shall take effect upon posting.

SECTION 1: **AMENDMENT** "3.01.090 Amendments To The Zoning Ordinance Or Zoning Map" of the Alpine City Development Code is hereby *amended* as follows:

AMENDMENT

3.01.090 Amendments To The Zoning Ordinance Or Zoning Map

1. **Amendments to the Zoning Ordinance**. Amendments to the Zoning Ordinance may be initiated by the City Council, the Planning Commission, the staff, or by an owner of real property in the area included in the proposed amendment.

   Amendments to the Zoning Ordinance:
   a. Shall first be submitted to the Planning Commission for its review and recommendation.
   b. The Planning Commission shall provide appropriate notice and hold a public hearing on proposed amendments to the zoning ordinance before making a recommendation to the City Council. The Planning Commission may hold additional public hearings if deemed necessary or appropriate by the Planning Commission.
   c. The Planning Commission shall prepare and make a recommendation to the City Council on proposed amendments to the zoning ordinance that represents

the Planning Commission's recommendation for regulating the use and development of land within all or any part of the area of the City.

d. The City Council shall consider each proposed amendment to the zoning ordinance recommended by the Planning Commission. The City Council shall have the option to hold a public hearing(s).
e. The City Council may adopt or reject amendments to the zoning ordinance either as proposed by the Planning Commission or after making any revisions the City Council considers appropriate.

2. **Amendments to the Zoning Map (Zone Change)**. Amendments to the Zoning Map may be initiated by the City Council, the Planning Commission, the staff, or by an owner of real property in the area included in the proposed amendment.

   Any application to change the boundary of a zone shall include an accurate map or other sufficient legal description of the area proposed for change. Applicants shall submit ten (10) copies of all required documentation to the City Planner at least fourteen (14) days prior to the public hearing.

   Amendments to the Zoning Map (Zone Change):
   a. Shall first be submitted to the City Planner for its review before an applicant may apply to the Planning Commission.
   b. If the applicant chooses to apply to the Planning Commission for a proposed zone change, the applicant shall pay the associated fee and the City Recorder shall set a public hearing for the Planning Commission on the proposed amendment to the zoning map, and shall provide appropriate notice for said public hearing. The public hearing shall be held before the Planning Commission may make a recommendation to the City Council. The Planning Commission may hold additional public hearings if deemed necessary or appropriate by the Planning Commission.
   c. The Planning Commission shall prepare and make a recommendation to the City Council on each proposed amendment to the zoning map that comes before the Planning Commission.
   d. The City Council shall consider each proposed amendment to the zoning map recommended by the Planning Commission. The City Council shall have the option to hold a public hearing(s) on the proposed zone change.
   e. The City Council may approve or deny the proposed amendment to the zoning map, either as proposed by the Planning Commission or after making any revision the City Council considers appropriate.

3. **Written Notification of Property Owners**. At least (14) fourteen days prior to the public hearing held by the Planning Commission, the applicant for an amendment to the zone map shall submit to the Alpine City Planner a list of all property owners within five hundred (500) feet of the boundaries of the proposed zone change, along with stamped envelopes addressed to each of the property owners.

   At least ~~seven~~ ten (~~7~~10) days prior to the public hearing held by the Planning

Commission, City staff will mail, in the envelopes provided by the applicant, written notification of the requested zone change with the following information:

a. Address or location of the property for which a zone change is requested;
b. The current zoning designation and proposed zoning;
c. Name of the property owner;
d. Number of acres; and
e. Date, time, and place of the public hearing at which the zone change will be considered.

The written notification shall be required only for the first public hearing held by the Planning Commission. It shall not be required for any additional public hearings that may be held.

4. **Sign**. In addition to the mailing, the property owner shall erect a sign of sufficient durability, and print and size quality that is reasonably calculated to give notice to passers-by. The sign shall be required only for the first public hearing held by the Planning Commission. It shall not be required for any additional public hearings that may be held.

The sign:

a. shall be 4 ft. (H) x 8 ft. (W);
b. is to be raised no more than six (6) feet in height from the ground;
c. shall be posted five (5) feet inside the property line in a visible location on the property proposed for the zone change; and
d. shall be posted at least fourteen (14) days prior to the public hearing at which the zone change will be presented to the Planning Commission.

The following information shall be on the sign:

i. Current zoning of the property and proposed zoning;
ii. Number of acres; and
iii. Date, time, and place of the first public hearing at which the zone change will be considered by the Planning Commission.

(Amended by Ordinance 2000-03, 3/28/00; 2007-04, 4/10/07)

PASSED AND ADOPTED BY THE ALPINE CITY COUNCIL
_____.

	AYE	NAY	ABSENT	ABSTAIN
Lon Lott	_____	_____	_____	_____
Carla Merrill	_____	_____	_____	_____
Gregory Gordon	_____	_____	_____	_____
Jason Thelin	_____	_____	_____	_____
Jessica Smuin	_____	_____	_____	_____

Presiding Officer

_____
Troy Stout, Mayor, Alpine City

Attest

_____
Bonnie Cooper, City Recorder Alpine City

ALPINE CITY
ORDINANCE 2020-18

AN ORDINANCE ADOPTING AMENDMENTS TO ARTICLE 3.01.090 OF THE ALPINE CITY DEVELOPMENT CODE PERTAINING TO WRITTEN NOTIFICATION REQUIREMENTS OF AMENDMENTS TO THE ZONING MAP.

WHEREAS, The City Council of Alpine, Utah has deemed it in the best interest of Alpine City to amend the ordinance to set forth the requirements for written notification of amendments to the zoning map; and

WHEREAS, the Alpine City Planning Commission has reviewed the proposed Amendments to the Development Code, held a public hearing, and has forwarded a recommendation to the City Council; and

WHEREAS, the Alpine City Council has reviewed the proposed Amendments to the Development Code:

NOW THEREFORE, be it ordained by the Council of Alpine City, in the State of Utah, as follows: The amendments to Article 3.01.090 contained in the attached document will supersede Article 3.01.090 as previously adopted. This ordinance shall take effect upon posting.

SECTION 1: **AMENDMENT** "3.01.090 Amendments To The Zoning Ordinance Or Zoning Map" of the Alpine City Development Code is hereby *amended* as follows:

AMENDMENT

3.01.090 Amendments To The Zoning Ordinance Or Zoning Map

1. **Amendments to the Zoning Ordinance**. Amendments to the Zoning Ordinance may be initiated by the City Council, the Planning Commission, the staff, or by an owner of real property in the area included in the proposed amendment.

   Amendments to the Zoning Ordinance:
   a. Shall first be submitted to the Planning Commission for its review and recommendation.
   b. The Planning Commission shall provide appropriate notice and hold a public hearing on proposed amendments to the zoning ordinance before making a recommendation to the City Council. The Planning Commission may hold additional public hearings if deemed necessary or appropriate by the Planning Commission.
   c. The Planning Commission shall prepare and make a recommendation to the City Council on proposed amendments to the zoning ordinance that represents

the Planning Commission's recommendation for regulating the use and development of land within all or any part of the area of the City.

d. The City Council shall consider each proposed amendment to the zoning ordinance recommended by the Planning Commission. The City Council shall have the option to hold a public hearing(s).
e. The City Council may adopt or reject amendments to the zoning ordinance either as proposed by the Planning Commission or after making any revisions the City Council considers appropriate.

2. **Amendments to the Zoning Map (Zone Change)**. Amendments to the Zoning Map may be initiated by the City Council, the Planning Commission, the staff, or by an owner of real property in the area included in the proposed amendment.

   Any application to change the boundary of a zone shall include an accurate map or other sufficient legal description of the area proposed for change. Applicants shall submit ten (10) copies of all required documentation to the City Planner at least fourteen (14) days prior to the public hearing.

   Amendments to the Zoning Map (Zone Change):
   a. Shall first be submitted to the City Planner for its review before an applicant may apply to the Planning Commission.
   b. If the applicant chooses to apply to the Planning Commission for a proposed zone change, the applicant shall pay the associated fee and the City Recorder shall set a public hearing for the Planning Commission on the proposed amendment to the zoning map, and shall provide appropriate notice for said public hearing. The public hearing shall be held before the Planning Commission may make a recommendation to the City Council. The Planning Commission may hold additional public hearings if deemed necessary or appropriate by the Planning Commission.
   c. The Planning Commission shall prepare and make a recommendation to the City Council on each proposed amendment to the zoning map that comes before the Planning Commission.
   d. The City Council shall consider each proposed amendment to the zoning map recommended by the Planning Commission. The City Council shall have the option to hold a public hearing(s) on the proposed zone change.
   e. The City Council may approve or deny the proposed amendment to the zoning map, either as proposed by the Planning Commission or after making any revision the City Council considers appropriate.
3. **Written Notification of Property Owners**. At least (14) fourteen days prior to the public hearing held by the Planning Commission, the applicant for an amendment to the zone map shall submit to the Alpine City Planner a list of all property owners within five hundred (500) feet of the boundaries of the proposed zone change, along with stamped envelopes addressed to each of the property owners.

   At least ten (10) days prior to the public hearing held by the Planning Commission, City

staff will mail, in the envelopes provided by the applicant, written notification of the requested zone change with the following information:

a. Address or location of the property for which a zone change is requested;
b. The current zoning designation and proposed zoning;
c. Name of the property owner;
d. Number of acres; and
e. Date, time, and place of the public hearing at which the zone change will be considered.

The written notification shall be required only for the first public hearing held by the Planning Commission. It shall not be required for any additional public hearings that may be held.

4. **Sign**. In addition to the mailing, the property owner shall erect a sign of sufficient durability, and print and size quality that is reasonably calculated to give notice to passers-by. The sign shall be required only for the first public hearing held by the Planning Commission. It shall not be required for any additional public hearings that may be held.

The sign:

a. shall be 4 ft. (H) x 8 ft. (W);
b. is to be raised no more than six (6) feet in height from the ground;
c. shall be posted five (5) feet inside the property line in a visible location on the property proposed for the zone change; and
d. shall be posted at least fourteen (14) days prior to the public hearing at which the zone change will be presented to the Planning Commission.

The following information shall be on the sign:

i. Current zoning of the property and proposed zoning;
ii. Number of acres; and
iii. Date, time, and place of the first public hearing at which the zone change will be considered by the Planning Commission.

(Amended by Ordinance 2000-03, 3/28/00; 2007-04, 4/10/07)

PASSED AND ADOPTED BY THE ALPINE CITY COUNCIL
_____.

	AYE	NAY	ABSENT	ABSTAIN
Lon Lott	_____	_____	_____	_____
Carla Merrill	_____	_____	_____	_____
Gregory Gordon	_____	_____	_____	_____
Jason Thelin	_____	_____	_____	_____
Jessica Smuin	_____	_____	_____	_____

Presiding Officer

_____
Troy Stout, Mayor, Alpine City

Attest

_____
Bonnie Cooper, City Recorder Alpine City

ALPINE PLANNING COMMISSION AGENDA

SUBJECT: **Public Hearing – Resolution 2020-16 Construction Standards Specifications and Details**

FOR CONSIDERATION ON: **6 October 2020**

PETITIONER: **Staff**

ACTION REQUESTED BY PETITIONER: **Hold a public hearing, review and recommend approval of the proposed update.**

BACKGROUND INFORMATION:

The City Construction Standards Specifications and Details need to be updated. Included in the updates is a new dark sky profile for the City street lights that the Planning Commission has indicated they would be in favor of changing. Planning Commission should review the changes and make a recommendation to City Council. See attached memo for full list of changes.

STAFF RECOMMENDATION:
Recommend approval of Resolution 2020-16 as proposed.

SAMPLE MOTION TO APPROVE:
I motion to recommend that Resolution 2020-16 be approved as proposed.

SAMPLE MOTION TO APPROVE WITH CONDITIONS:
I motion to recommend that Resolution 2020-16 be approved with the following conditions/changes:

- ***Insert Finding***

SAMPLE MOTION TO TABLE/DENY:
I motion to recommend that Resolution 2020-16 be tabled/denied based on the following:

- ***Insert Finding***

Memo

To: **Alpine City Planning Commission and City Council**

From: **Jed Muhlestein, P.E., City Engineer**

Date: **September 30, 2020**
Subject: **Updates to Construction Standards Specifications and Details**

This memo is written to highlight the proposed changes to the Alpine City Construction Standard Specifications and Details. The most recent version was adopted November 19, 2019. Since that time, Staff has noticed areas that could be improved. These changes (in red) are shown below:

Construction Standard Specifications

1. Section 200.030.F (pg 12) – Location of curb cuts for driveways
   Driveways and street intersection locations shall be designed according to Alpine City Transportation Master Plan. No driveway shall be constructed within 40 feet from an adjoining street. The distance is measured from the adjoining street's Top Back Curb (TBC) to the edge of driveway for access.

   Curb cuts shall only be allowed for driveways. Driveways shall be a minimum of 3 feet away from any above grade utility box and curb cuts for driveways must be a minimum of 6-inches away from the property line. All accesses and streets onto arterials must be approved by the City Engineer or his/her designee.

2. Section 400.050.B (pg 41) – Location and height of Fire Hydrants
   In general, fire hydrants should be located on property lines to minimize conflicts with driveways. Fire hydrant location to be approved by the City Engineer or his/her designee. Fire hydrants shall be set vertical and held in place by adequate concrete blocking which shall be left in the trench. Hydrants shall be set at a height that will allow ~~approximately~~ 2 inches minimum and 7 inches maximum exposed between the finished ground and the sidewalk flange. A gravel filled drip area shall be provided. Hydrant drains shall not be connected to or located within 10 feet of sanitary sewers. Where possible hydrant drain shall not be located within 10 feet of storm drains. See standard drawing for fire hydrants.

3. Section 600.040.B (pg 57) – Requires gas and power to be installed prior to paving
   For all new construction, paving shall not occur until gas and~~,~~ power utilities are installed. ~~, and dry~~Other dry utility crossings ~~are~~ shall be installed and approved by the dry utility company representative and the City Engineer or his/her designee. Crossings shall be surveyed and included on the asbuilt drawings. Required testing for culinary water, pressurized irrigation, sewer, and storm drain shall be completed and approved by the City Engineer or his/her designee prior to paving.

4. Section 250.080.D (pg 23) – Asphalt thickness, developments
   Thickness Test. Material depth tests will be conducted by the City when the City Engineer or his/her designee considers it necessary. The total depth shall be reasonably close to that shown on the typical section.

   For City projects, ~~D~~depth analysis shall be made on at least four holes for each section. Base thickness shall be accepted if 75% of the test holes are less than 1/4" below the specified thickness and no individual hole shall be more than ~~3/4~~1/2" below the specified thickness. Work with sub-standard thickness may be accepted at reduced price if the appropriate pay factor for the lowest tested thickness is applied to all of the sub-standard work. The following table outlines the pay factors for sub-standard asphalt pavement thickness:

PAVEMENT DEPTH PAY FACTORS FOR CITY PROJECTS

Pay Factor	Tolerance (inches below specified thickness)
0.95	0.00 to 0.25
0.90	0.26 to 0.50
Replace	More than 0.5

   For new development, the City will accept nothing less than what the plans call for. Depth analysis shall be made on at least four holes for each section. Base thickness shall be accepted if 75% of the test holes are less than 1/8" below the specified thickness and no individual hole shall be more than 1/4" below the specified thickness. Work with sub-standard thickness will be rejected, removed, and replaced.

Construction Details

5. Standard Drawing 31 – Residential Street Light moves to Dark Sky compliant
   There has been discussions recently about lighting. Mountain States Lighting provided the City with a Dark Sky compliant residential light fixture about six months ago. City Staff installed the fixture south of City Hall in the parking lot for the Planning Commission and City Council to see. If this is something the City is interested in, approval of the attached updated detail is all that would be required. All new development and any replaced residential light fixtures would use the new standard.

   Staff has been working with Mountain States Lighting to see if there is a Dark Sky compliant option that could replace the downtown decorative style, but we have not found an option that looks like what the city currently has yet.

6. Standard Drawing 23 – Typical Fire Hydrant concrete pad size change
   The size of the concrete pad at the base of a fire hydrant has changed to match park strip widths. It changed from a 4'x4' to 5'x4'.

Cc: File
Attached:
- Photos of Residential and Downtown Style Dark Sky compliant light fixtures
- Proposed Standard Construction Drawings and Details

PHOTO COMPARISON OF CURRENT VS PROPOSED <u>RESIDENTIAL</u> LIGHT FIXTURES

Currently adopted Residential Street Light fixture
See Standard Detail 31

Proposed Residential Street Light fixture (Dark Sky Compliant)
See Standard Detail 31a

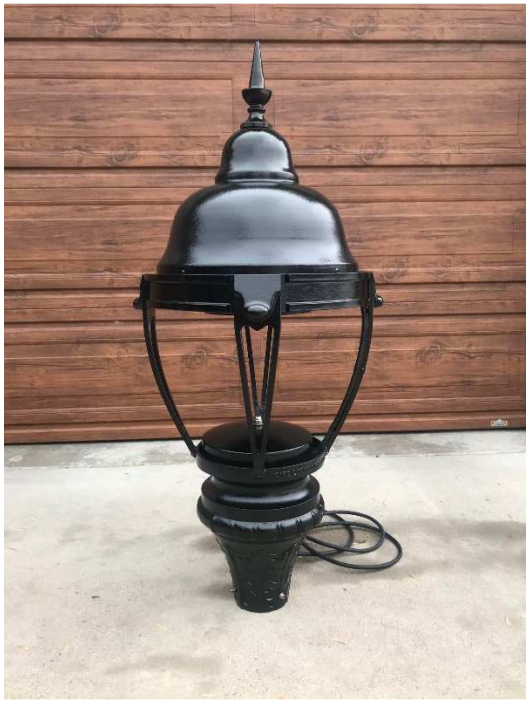

PHOTO COMPARISON OF CURRENT VS PROPOSED <u>DOWNTOWN DECORATIVE STYLE</u> LIGHT FIXTURES

Currently adopted Downtown Decorative Street Light fixture

Proposed Downtown Decorative light fixture (Dark Sky Compliant)

FIXTURE SPECIFICATIONS

K137 YARMOUTH (NO GLOBE) - LED

With its simple, yet classic design, the K137 Yarmouth is an excellent fit in architectural locations that are contemporary, historical, or somewhere in between. Teamed with King Luminaire's high performance P4 LED engine it makes for a perfect solution for city streets, parks, schools and commercial areas.

King Luminaire

PRODUCT SPECIFICATIONS

LED ENGINE
Light engine shall include an array of Cree X-Series high power LEDs (light emitting diodes). The emitters shall be mounted to a metal core circuit board using SMT technology. The LEDs and circuit boards shall then be mounted to a high performance heat sink.

OPTICS
External light control shall consist of high precision refractive lenses mounted above the LED emitter arrays in such a way to achieve optimum uplight control. The lenses shall also control horizontal light distribution so that Type II, III, IV or V IESNA distribution patterns are achieved.

LUMINAIRE CONSTRUCTION
All K137 Yarmouth cast components shall consist of a heavy grade A319 cast aluminum. The main body, or capital, acts as an enclosure for the driver assembly and is of adequate thickness to give sufficient structural rigidity.

The four heavy grade A319 cast aluminum struts that connect the main body and the capital are of adequate thickness to provide structural rigidity.

The capital shall have an opening at the base tenon body to allow the luminaire to be mounted to a tenon of 3-1/2" maximum diameter. The luminaire shall be locked in place by means of heavy duty, stainless steel set-screws.

DRIVER
The LED universal dimmable driver will be class 2 and capable of 120 - 277V or 347 - 480V input voltage, greater than 0.9 power factor, less than 20% total harmonic distortion. The case temperature of the driver can range from -40°C up to 70°C. Each LED system comes with a standard surge protection designed to withstand up to 20kV/10kA of transient line surge as per IEEE C62.41.2 C High. An in-line ferrite choke is utilized to provide protection against EFT's. The driver assembly will be mounted on a heavy duty fabricated galvanized steel mounting bracket to allow complete tool-less maintenance.

PHOTOMETRICS
Fixtures are tested to IESNA LM79 specifications. These reports are available upon request.

CHROMATICITY
High output LEDs come standard at 3000K & 4000K (+/- 300K) with a minimum nominal 70 CRI. Additional CCT emitters are available upon request.

LUMEN MAINTENANCE
Reported (TM21) and Calculated (L70) reports are available upon request with a minimum calculated value of 100,000 hrs.

WIRING
All internal wiring and connections shall be completed so that it will be necessary only to attach the incoming supply connectors to Mate-N-Lok connectors or to a terminal block. Mate-N-Lok shall be certified for 600V operation. Internal wire connectors shall be crimp connector only and rated at 1000V and 150°C. All wiring to be CSA certified and/or UL listed, type SFF-2, SEWF-2, or SEW-2 No. 14 gauge, 150°C, 600V, and color coded for the required voltage.

THERMALS
Fixtures tested by a DOE sanctioned test facility to determine the maximum in-situ solder-point or junction-point temperatures of the LED emitters. This report is available upon request.

FINISH
Housing is finished with a 13 step KingCoat™ SuperDurable polyester TGIC powder coat. Standard colors include strobe white, brown metal, marina blue, gate gray, Chicago bronze, standard gold, standard black, federal green and rain forest. Please see our website for a complete list of colors. RAL and custom color matches are available.

MISCELLANEOUS
All exterior hardware and fasteners, wholly or partly exposed, shall be stainless steel alloy. All internal fasteners are stainless steel or zinc coated steel. All remaining internal hardware is stainless steel, aluminum alloy, or zinc coated steel.

WARRANTY
The K137 Yarmouth LED luminaire comes with a 7 year limited warranty.

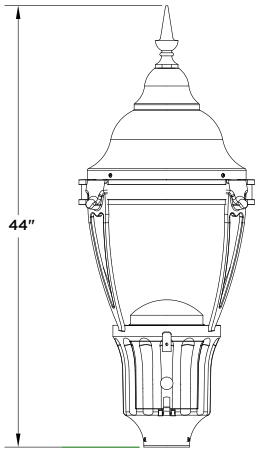

SHOWN WITH K24 CAPITAL

CERTIFICATION:
CSA US Listed
Suitable for wet locations
ISO 9001
IP66
ARRA Compliant
LM79 / LM80 Compliant
IDA Certified*

DRIVER INFO:
>0.9 Power Factor
<20% Total Harmonic Distortion
120 - 277V & 347 - 480V
-40°C Min. Case Temperature
70°C Max. Case Temperature
Surge Protection: ANSI C136.2 extreme level 20kV/10kA

EPA:
1.55 sq. ft.

FIXTURE WEIGHT:
40 lbs

*IDA Certification applicable for maximum 3000K CCT. Glass lenses do not apply.
Contact King Luminaire for product specifications that are exempt from CSA Certification
1-30-2020

FIXTURE OPTIONS

K137 YARMOUTH (NO GLOBE) - LED

Capital Options

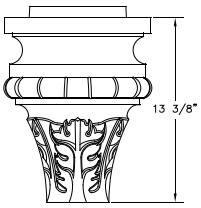

K13

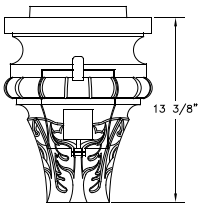

K14 C/W PR

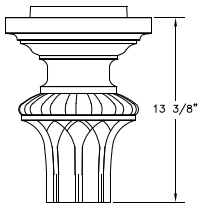

K16

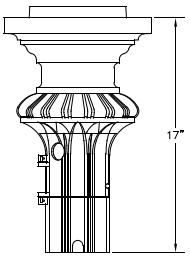

K18 C/W PR

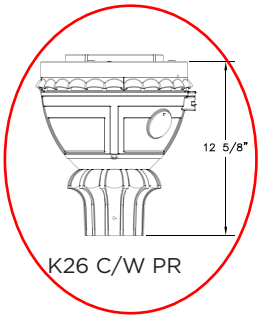

K26 C/W PR

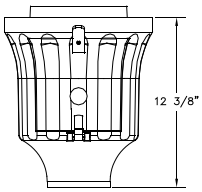

K24 C/W PR

Finial Options

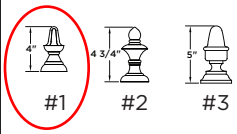

HOW TO ORDER

K137R - P4NG - III - 60 (SSL) 7030 - 120 - K26 - PR7 - 3K - TB - BK - 1 - WS

LUMINAIRE STYLE
K137R - Yarmouth

IES LIGHTING CLASSIFICATION
II - Type 2
III - Type 3
IV - Type 4
V - Type 5

SOURCE
SSL - Solid State

SERIES
7030 (40 - 100W P4)

LINE VOLTAGE
120V (120-277)
480V (347-480)*

*Select wattages available within this range, contact King Luminaire

CAPITAL
K13, K14, K16, K18, K26, K24

*Additional options available on website

CCT
3K - 3000K
4K - 4000K

PAINT COLOR
GN - Federal Green
BE - Blue
GY - Gray
BN - Brown
BK - Black
BZ - Bronze

*Additional options available on website

WATTAGE
40, 60, 75, 100

OPTICAL OPTIONS
P4 - P4 Optic (Flat Array)

LENS OPTIONS
NG - No Globe*

*includes Ring and Struts (WRS)

PHOTO CONTROL OPTION
PR - Photo Receptacle
Available with K14, K18, K26 & K24

PE - Photo Receptacle and Photo Eye
Available with K14, K18, K26 & K24

PEBC - Photo Electric Buttoncell

*leave blank if not required

CONNECTION
Quick Disconnect is standard. If terminal block is required, please specify TB

FINIAL OPTIONS
#1, #2, #3

*Additional options available on website

WATTAGE SELECTOR
WS - Wattage Selector

* leave blank if not required

POST TOP LED ENGINE

7030 Flat Array

- Photometric Performance
- Superior Thermal Management
- Back Light Control
- Long Useful Life
- Up Light Control
- Dimmable
- Glare Control
- Sustainable Technology

The P4 7030 is a compact flat array optical system offering precision light quality and performance. Utilizing a refractor optic and 30 LED emitters, the P4 is perfect for both pedestrian and roadway applications, plus rail and park settings requiring a uniform footprint.

With premium light quality, excellent chromaticity and low glare, this optical system is available with Type II, III, IV or V IESNA distribution patterns. Precision optics provide enhanced photometric performance with premium light quality while offering a minimum of 106 lumens per watt and maintenance cost savings.

Effective thermal management is achieved with high performance heat sinks and with an efficient LED case temperature, the P4 7030 provides a long useful life that exceeds 100,000 hours.

The P4 7030 optical system was specifically designed for compact luminaires and is often paired with luminaires that utilize the larger P4 8060/8084 optical system for coordinating fixtures to offer architectural consistency. It is available with our traditional small pendants, select contemporary fixtures, coach lanterns, and octagonal fixtures.

Features & Benefits

- Precision optics with a minimum of 106 lumens per watt providing enhanced light quality and control, improved spacing and high efficacy
- Efficient LED optical system provides energy savings and reduced maintenance costs
- Long operational life due to efficient thermal management
- Includes a dimmable driver and optional wattage selector available
- Offering 3000K and 4000K (+/- 300K) CCT and minimum 70 CRI
- Manufactured to CSA and UL standards and includes a 7 year warranty

Performance

Specific photometric files can be found using an IES File Search tool on our website and additional TM21 reports are available upon request.

Optical System	Nominal Wattage	Input Wattage	IES Distribution	CCT	Lumens	Efficacy (L/W)	BUG	Uplight
P4 7030	40	40.2	II	4000K	5026			0%
P4 7030	60	60.3	II	4000K	7047			0%
P4 7030	75	76.6	II	4000K	8645	112.86	2-1-2	0%
P4 7030	100	100.9	II	4000K	10723	106.28	2-1-2	0%
P4 7030	40	40.3	III	4000K	5078	126.02	1-1-1	0%
P4 7030	60	60.1	III	4000K	7071	117.65	2-1-2	0%
P4 7030	75	76.3	III	4000K	8735	114.48	2-1-2	0%
P4 7030	100	100.7	III	4000K	10848	107.73	2-1-2	0%
P4 7030	40	41.3	IV	4000K	5203	125.98	1-1-1	0%
P4 7030	60	59.7	IV	4000K	7103	118.97	1-1-2	0%
P4 7030	75	73.1	IV	4000K	8529	116.67	1-1-2	0%
P4 7030	100	101.7	IV	4000K	10837	106.55	2-2-2	0%
P4 7030	40	40.4	V	4000K	5068	125.42	2-1-1	0%
P4 7030	60	59.8	V	4000K	7060	118.06	2-1-1	0%
P4 7030	75	76.5	V	4000K	8739	114.23	3-1-1	0%
P4 7030	100	100.7	V	4000K	10764	106.89	3-1-2	0%

3000K Specified to be Dark Sky Compliant

Type II, 100W at 16' Mount
1" represents 25'

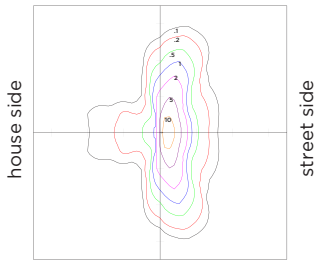

Type III, 100W at 16' Mount
1" represents 25'

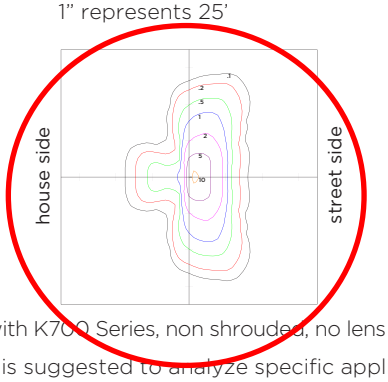

Type IV, 100W at 16' Mount
1" represents 25'

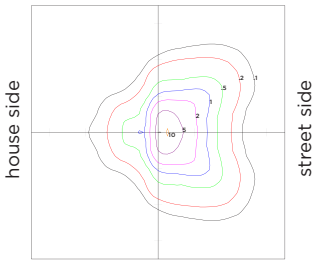

Type V, 100W at 16' Mount
1" represents 25'

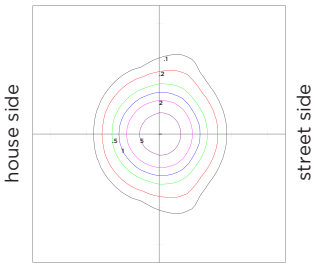

Photometric testing completed with K700 Series, non shrouded, no lens luminaires

Further photometric evaluation is suggested to analyze specific applications and achieve desired objectives

2-6-2020

CURRENT STANDARD DETAILS
(Markup and Final of modified details only)

Alpine City Engineering
20 North Main • Alpine, Utah 84004

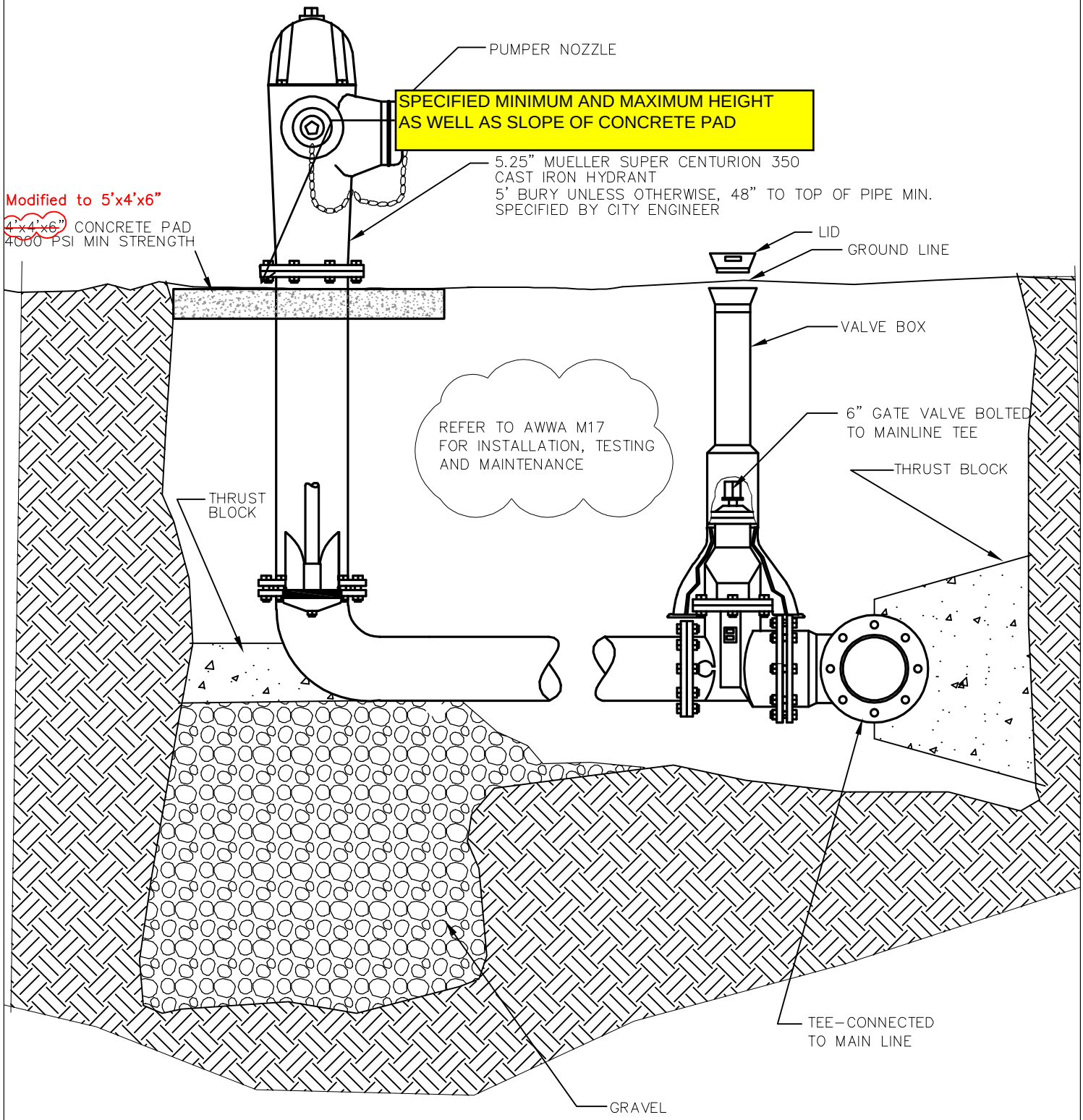

STANDARD FIRE HYDRANT DETAIL

N.T.S.

STATEMENT OF USE

THIS DOCUMENT AND ANY ILLUSTRATIONS HEREON ARE PROVIDED AS STANDARD CONSTRUCTION DETAILS WITHIN ALPINE CITY. DEVEATION FROM THIS DOCUMENT REQUIRES APPROVAL OF ALPINE CITY, ALPINE CITY CORPRTATION CAN NOT BE HELD LIABLE FOR MISSUSE OR CHANGES REGARDING THIS DOCUMENT.

REVISION

NO.		BY	APRL.	DATE

ALPINE CITY
ESTABLISHED 1850

CAD FILE: \engineering\standard drawings\2015 details\Fhyd 18.dwg

TYPICAL FIRE HYDRANT

ALPINE CITY
20 NORTH MAIN
ALPINE, UT 84004

STANDARD DRAWING NUMBER:	23
PLOT SCALE:	N.T.S.
DRAWN BY:	WJM
DESIGN BY:	
CHECKED BY:	
ADOPTED DATE:	4/14/04

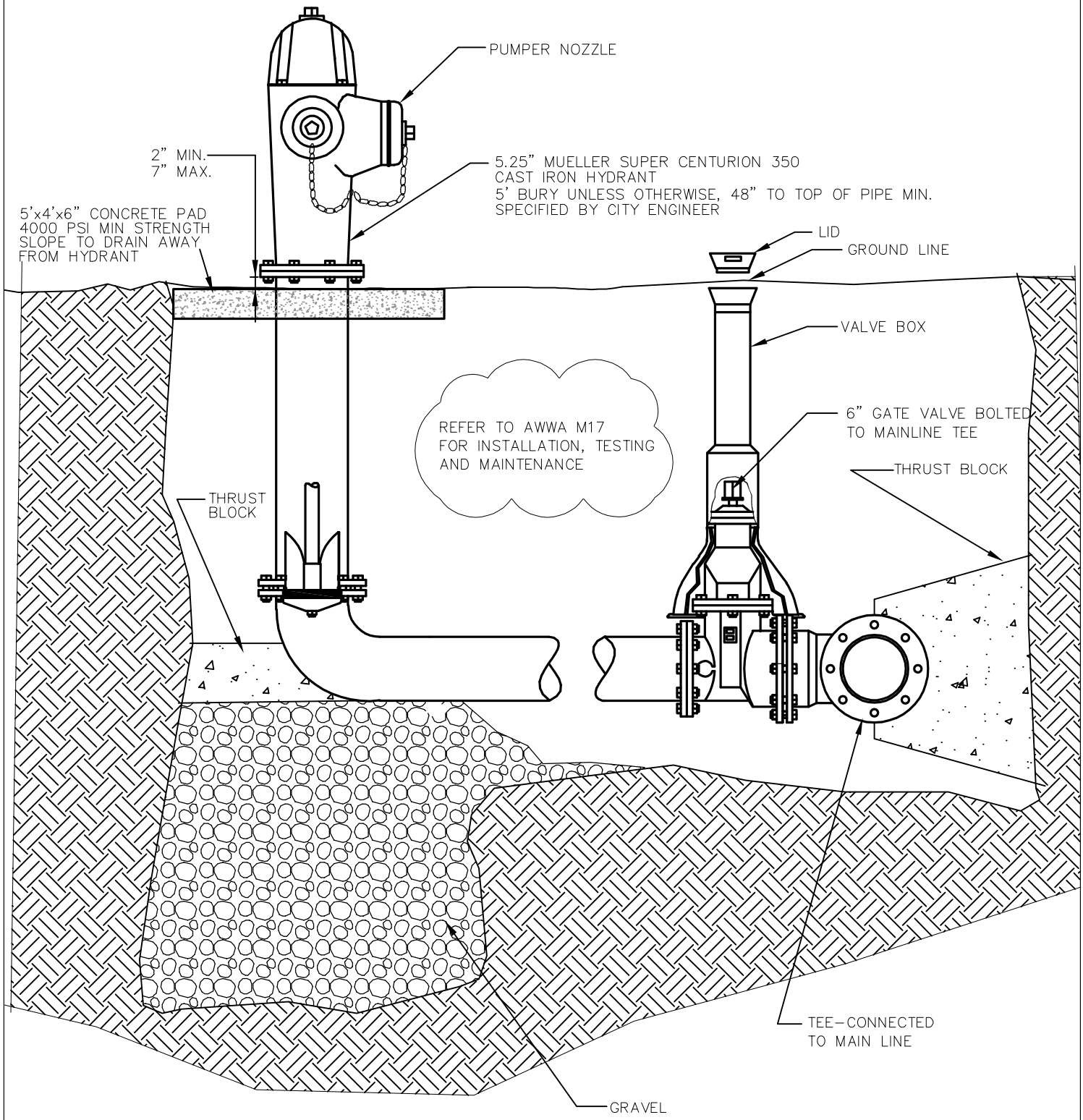

STANDARD FIRE HYDRANT DETAIL

N.T.S.

STATEMENT OF USE

THIS DOCUMENT AND ANY ILLUSTRATIONS HEREON ARE PROVIDED AS STANDARD CONSTRUCTION DETAILS WITHIN ALPINE CITY. DEVEATION FROM THIS DOCUMENT REQUIRES APPROVAL OF ALPINE CITY, ALPINE CITY CORPRTATION CAN NOT BE HELD LIABLE FOR MISSUSE OR CHANGES REGARDING THIS DOCUMENT.

REVISION

NO.		BY	APRL.	DATE

ALPINE CITY
ESTABLISHED 1850

CAD FILE: \engineering\standard drawings\2015 details\Std 18.dwg

TYPICAL FIRE HYDRANT

ALPINE CITY
20 NORTH MAIN
ALPINE, UT 84004

STANDARD DRAWING NUMBER:	23
PLOT SCALE:	N.T.S.
DRAWN BY:	WJM
DESIGN BY:	
CHECKED BY:	
ADOPTED DATE:	4/14/04

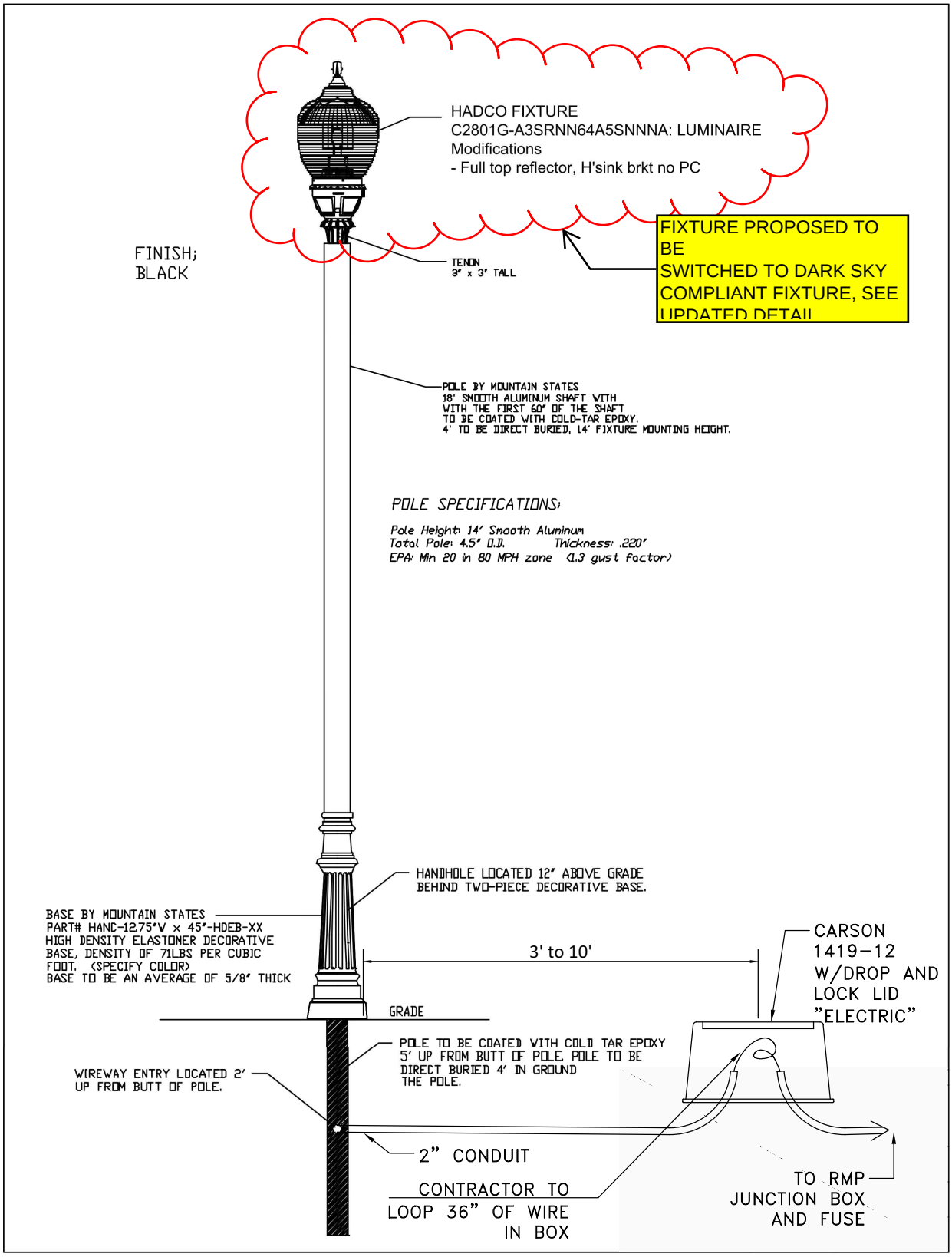

STATEMENT OF USE

THIS DOCUMENT AND ANY ILLUSTRATIONS HEREON ARE PROVIDED AS STANDARD CONSTRUCTION DETAILS WITHIN ALPINE CITY. DEVEATION FROM THIS DOCUMENT REQUIRES APPROVAL OF ALPINE CITY, ALPINE CITY CORPRTATION CAN NOT BE HELD LIABLE FOR MISSUSE OR CHANGES REGARDING THIS DOCUMENT.

REVISION

NO.		BY	APRL.	DATE

ALPINE CITY
ESTABLISHED 1850

CAD FILE: E:\ENGINEERING\STANDARD DRAWINGS\2015 UPDATED (CURRENT)\31 STREET LIGHT

RESIDENTIAL STREET LIGHT

ALPINE CITY
20 NORTH MAIN
ALPINE, UT 84004

STANDARD DRAWING NUMBER: 31

PLOT SCALE:	N.T.S.
DRAWN BY:	WJM
DESIGN BY:	
CHECKED BY:	
ADOPTED DATE:	12/7/18

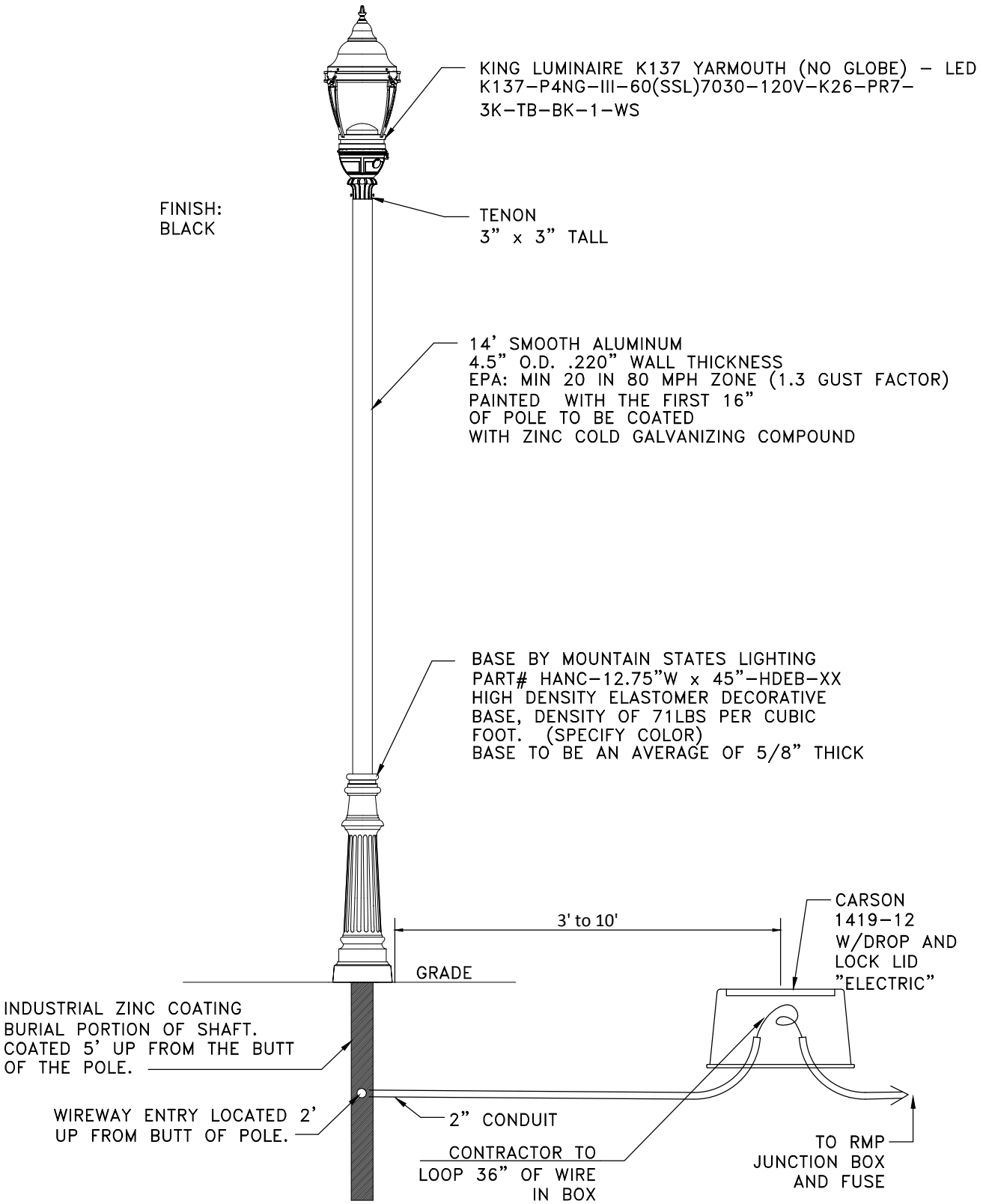

STATEMENT OF USE

THIS DOCUMENT AND ANY ILLUSTRATIONS HEREON ARE PROVIDED AS STANDARD CONSTRUCTION DETAILS WITHIN ALPINE CITY. DEVEATION FROM THIS DOCUMENT REQUIRES APPROVAL OF ALPINE CITY, ALPINE CITY CORPRTATION CAN NOT BE HELD LIABLE FOR MISSUSE OR CHANGES REGARDING THIS DOCUMENT.

REVISION

NO.		BY	APRL.	DATE

ALPINE CITY
ESTABLISHED 1850

CAD FILE: E:\ENGINEERING\STANDARD SPECIFICATIONS AND DRAWINGS\2020 CITY SPEC AND DETAILS (PROPOSED)\CITY DETAILS\31 RESIDENTIAL POLE ASSEMBLY

RESIDENTIAL STREET LIGHT

ALPINE CITY
20 NORTH MAIN
ALPINE, UT 84004

STANDARD DRAWING NUMBER:	31
PLOT SCALE:	N.T.S.
DRAWN BY:	WJM
DESIGN BY:	
CHECKED BY:	
ADOPTED DATE:	DRAFT

HADCO FIXTURE
C2801E: LUMINARE
MODIFICATIONS: Logo Case

Finish;
Black

FIXTURE PROPOSED TO BE
SWITCHED TO DARK SKY COMPLIANT FIXTURE, SEE UPDATED DETAIL

Tenon 3" x 3" Tall

Pole by Mountain States Lighting
14' extruded fluted aluminum shaft
with the first 16" of the shaft
to be coated with cold-tar epoxy

Pole Specifications:
Mounting Height: 14'
Pole O.D.: 5.0"
Wall Thickness: .250"
EPA: Min 20 in 80 MPH zone (1.3 gust factor)
Anchor Plate: 12" bolt circle w/ 3/4" x 18" bolts

Note!
If depth cannot be
met mass must be
equivalent to mass
shown

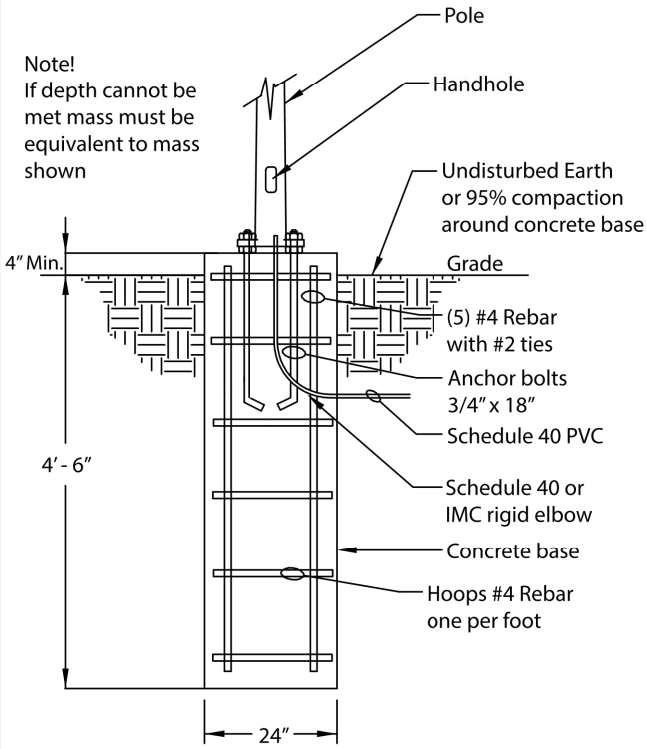

ARTERIAL - CONCRETE BASE DETAIL

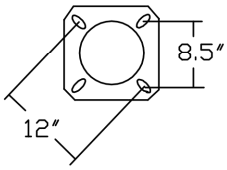

Anchor base detail
12" bolt circle
Anchor bolts: 3/4" x 18"

Base by Mountain States Lighting
Part # Hanc-12.75"W x 45"-HDEB-BK
High density elastomer decorative
base, (Non-corroding).
Density: 71lbs per cubic ft.
Base to be an average of 5/8" thick

Handhole located 12" above grade
behind two-piece decorative base.

** SEE DETAIL 31 **
FOR REQUIRED
JUNCTION BOX
AT BASE

STATEMENT OF USE

THIS DOCUMENT AND ANY ILLUSTRATIONS HEREON ARE PROVIDED AS STANDARD CONSTRUCTION DETAILS WITHIN ALPINE CITY. DEVEATION FROM THIS DOCUMENT REQUIRES APPROVAL OF ALPINE CITY, ALPINE CITY CORPRTATION CAN NOT BE HELD LIABLE FOR MISSUSE OR CHANGES REGARDING THIS DOCUMENT.

REVISION

NO.		BY	APRL.	DATE

ALPINE CITY
ESTABLISHED 1850

CAD FILE: E:\ENGINEERING\STANDARD DRAWINGS\2015 UPDATED (CURRENT)\31A STREET LIGHT - DECORATIVE BOLT DOWN

DOWNTOWN STREET LIGHT

ALPINE CITY
20 NORTH MAIN
ALPINE, UT 84004

STANDARD DRAWING NUMBER: 31a

PLOT SCALE:	N.T.S.
DRAWN BY:	WJM
DESIGN BY:	
CHECKED BY:	
ADOPTED DATE:	12/7/18

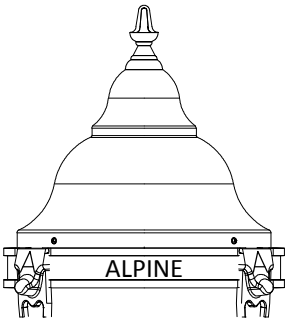

ENLARGED FIXTURE TOP

NOTE!!
IF DEPTH CANNOT BE MET MASS MUST BE EQUIVALENT TO MASS SHOWN

FINISH;
BLACK

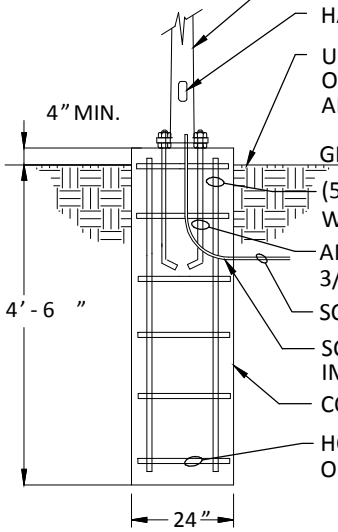

CONCRETE BASE DETAIL

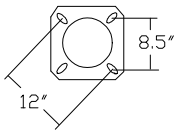

ANCHOR BASE DETAIL
12"BOLT CIRCLE
ANCHOR BOLTS: 3/4"x 18"

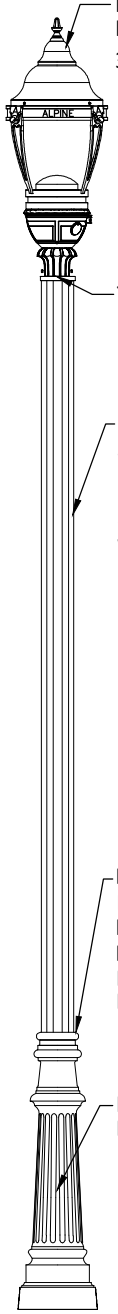

KING LUMINAIRE K137 YARMOUTH (NO GLOBE) - LED
K137-P4NG-III-100(SSL)7030-120V-K26-PR7-
3K-TB-BK-1-WS

TENON 3"X3" TALL

14' EXTRUDED FLUTED ALUMINUM
5.0" O.D. .250" WALL THICKNESS
EPA MIN 20 IN 80 MPH ZONE (1.3 GUST FACTOR)
PAINTED WITH THE FIRST 16"
OF POLE TO BE COATED
WITH ZINC COLD GALVANIZING COMPOUND

BASE BY MOUNTAIN STATES
PART# HANC-12.75"W x 45"-HDEB-BK
HIGH DENSITY ELASTOMER DECORATIVE
BASE, DENSITY OF 71LBS PER CUBIC
DENSITY: 71LBS PER CUBIC FOOT.
BASE TO BE AN AVERAGE OF 5/8" THICK

HANDHOLE LOCATED 12" ABOVE GRADE
BEHIND TWO-PIECE DECORATIVE BASE.

** SEE DETAIL 31 **
FOR REQUIRED
JUNCTION BOX
AT BASE

STATEMENT OF USE

THIS DOCUMENT AND ANY ILLUSTRATIONS HEREON ARE PROVIDED AS STANDARD CONSTRUCTION DETAILS WITHIN ALPINE CITY. DEVEATION FROM THIS DOCUMENT REQUIRES APPROVAL OF ALPINE CITY, ALPINE CITY CORPRTATION CAN NOT BE HELD LIABLE FOR MISSUSE OR CHANGES REGARDING THIS DOCUMENT.

REVISION

NO.		BY	APRL.	DATE

ALPINE CITY
ESTABLISHED 1850

CAD FILE: 31A STREET LIGHT ALPINE CURRENT ARTERIAL POLE ASSEMBLY 9-23-20

DOWNTOWN STREET LIGHT

ALPINE CITY
20 NORTH MAIN
ALPINE, UT 84004

STANDARD DRAWING NUMBER: 31a

PLOT SCALE:	N.T.S.
DRAWN BY:	WJM
DESIGN BY:	
CHECKED BY:	
ADOPTED DATE:	12/7/18

PROPOSED CONSTRUCTION STANDARD SPECIFICATIONS AND DETAILS

(Clean version)

Alpine City Engineering
20 North Main • Alpine, Utah 84004

Jed Muhlestein

Alpine City Engineer

CONSTRUCTION STANDARD SPECIFICATIONS

Adopted _____ 2020

ALPINE CITY CONSTRUCTION STANDARDS

Section 100. General Provisions.
Section 200. Improvement and Design Requirements.
Section 250. Inspection and Testing.
Section 300. Contractor Requirements.
Section 350. Earthwork and Trenches.
Section 400. Drinking Water.
Section 450. Pressurized Irrigation.
Section 500. Sanitary Sewer
Section 550. Storm, Land and Groundwater Drains.
Section 600. Streets and Pavements.
Section 650. Portland Cement Concrete and Masonry Work.
Section 700. Reserved.
Section 750. Reserved.
Section 850. Surface Irrigation Systems.
Section 900. Landscaping.
Section 950. Irrigation Sprinkler Systems.
Section 1000. Standard Details

Section 100. General Provisions.

SECTION INDEX

100.010. Improvement Requirements.
- A. General.
- B. Improvements Made Before Recording.
- C. Variations, Substitutions, Exceptions and Changes.
- D. Protection of Existing Improvements.
- E. Maintaining Existing Road Surfaces.
- F. New Materials.
- G. City Furnished Products.
- H. Product Delivery and Handling.
- I. Product Storage and Protection.
- J. Building Permits.
- K. Other Specifications and Standards.

100.020. Definitions.

100.010. Improvement Requirements.

A. General. This policy defines the general requirements for improvements to be built by the Developer, sub-divider, owner, or Contractor for all types of construction, (to include residential, commercial, industrial, institutional, governmental and professional office). All improvements which are in areas that are or will become public rights-of-way and/or easements, or that will be under the responsibility of a homeowner's association shall meet the requirements of these specifications.

The improvements shall include all street improvements in front of all lots and along all dedicated streets to a connection with existing improvements of the same kind and to the boundaries of the development. Layout must provide for future extension to adjacent development and to be compatible with the contour of the ground for proper drainage. All drinking water, sanitary sewer, pressurized irrigation, electric, communication, storm, land or groundwater drains and any other buried utilities or conduits shall be installed to the boundary lines of the Subdivision or development.

B. Improvements Made Before Recording. No improvements shall be commenced until a final plat is approved and inspection fees paid.

C. Variations, Substitutions, Exceptions and Changes. Any variation, substitution or exception from the standards in this policy must be authorized in writing by the City Engineer or his/her designee. Product options and substitutions must meet the requirements of APWA 01 25 00 (Product Options and Substitutions). Any item of construction not covered in these standards must have plans and specifications approved by the City Engineer or his/her designee. Requests for changes to the Construction Standards shall be made in writing to the City Engineer. These requests will be reviewed during revision process conducted in conjunction with the APWA revisions.

D. Protection of Existing Improvements. The Contractor shall be responsible for the protection of any existing improvements on public or private property at the start of work or placed there during the progress of the work. Existing improvements shall include but are not limited to permanent surfacing, curbs, ditches, driveways, culverts, fences, walls and landscaping. Any surface improvements damaged as a result of construction shall be restored or replaced to an equal or better condition than before. This shall be accomplished in a timely manner.

E. Maintaining Existing Road Surfaces. The Contractor shall be responsible for maintaining existing road surfaces suitable for travel by the public. The Contractor shall be responsible for all dust and mud control and all claims and damages resulting from failure to maintain the construction area.

F. New Materials. Only new materials may be used during construction unless otherwise authorized by the City Engineer or his/her designee. In such a case where used materials are proposed, only materials of similar use may be installed in a new system with the same use. Example: Only previously used storm drain pipe can be evaluated for use in a new storm drain system or only previously used culinary main line may be evaluated for use in a new culinary system. If approved, the used materials must meet all applicable standards, thoroughly cleaned, and be restored to their original condition prior to installation.

G. City Furnished Products. If the City furnishes any products the Contractor shall conform to requirements and specifications of APWA 01 64 00 (Owner-furnished Products).

H. Product Delivery and Handling. The Contractor shall conform to requirements and specifications of APWA 01 65 00 (Product Delivery and Handling).

I. Product Storage and Protection. The Contractor shall conform to requirements and specifications of APWA 01 66 00 (Product Storage and Protection).

J. Building Permits. The City may issue a building permit upon application, in compliance with all laws, ordinances, rules, and regulations. No building permit will be issued until all the improvements essential to meet the building code and fire code are installed, accepted, and in service and all building permit and impact fees are paid.

When asphalt pavement plants are closed for the winter, building permits may be issued before paving if there is eight inches of compacted road base in all areas to be paved.

The City Engineer or his/her designee is hereby designated as the responsible official to accept the improvements.

K. Other Specifications and Standards. City standards and ordinances shall supersede all other Standards whenever they conflict. Alpine City hereby adopts 2017 APWA (American Public Works Association). If not covered in these specifications and details, 2017 APWA specifications shall be used.

100.020. Definitions.

A. AASHTO. The American Association of State Highway and Transportation Officials, is a standards setting body which publishes specifications, test protocols and guidelines which are used in highway design and construction throughout the United States.

B. APWA. The Utah Section, American Public Works Association Manual of Standard Specifications, latest edition with all approved supplements. These standard specifications can be obtained at http://utah.apwa.net/. When sections of the APWA manual are referred to in these standards, the Contractor shall also adhere to the requirements and specifications of all related sections referred to by the section of the APWA manual.

C. AWWA. The American Water Works Association Standards, latest edition.

D. City. The City of Alpine, Utah.

E. City Engineer. The person appointed by the City to be the City Engineer.

F. City Planner. The person appointed by the City to be the City Planner.

G. Civil Engineer. A person licensed with the State of Utah to practice as a professional engineer.

H. County. Utah County, Utah.

I. Construction Plans. Construction plans include drawings showing all required improvements for a development showing their location, size, grade, and elevations.

J. Customer. A person or company receiving service from any City utilities

K. Contractor. A person or company hired by the City or a Developer to perform construction in or for the City, having appropriate state licenses to perform said work.

L. Council or City Council. The governing body of the City.

M. Cul-de-sac. A permanent dead-end street.

N. Developer. Person, persons, partnership or corporation developing residential, commercial or industrial property.

O. Development Code. The Alpine City Development Code as currently adopted by the City Council.

P. Final Plat. An original recordable plat drawn on mylar in a form approved by the City and County, showing all lots, streets, utility easements, etc.

Q. Flood Plain. That area designated on the most recent Flood Insurance Rate Map for the City of Alpine, prepared by the Federal Emergency Management Agency, as a flood plain as amended.

R. General Plan. The general plan document as approved by the City Council.

S. Improved Lot. A lot which has all the improvements required in the Alpine City Development Code.

T. Improvements. Includes roads, streets, curb, gutters, sidewalks, grading, landscaping, water and sanitary sewer systems, irrigation systems, drainage systems, power and communication systems, fences, public facilities, trees or other requirements by this Section or by the City.

U. Land Surveyor. A person licensed with the State of Utah to practice as a licensed land surveyor.

V. Lot. A parcel or tract of land within a subdivision which is or may be occupied by a building or structure and the accessory buildings, structures or uses customarily incident thereto, including such open spaces as are arranged and designed to be used in connection with the building according to the zone within which the lot is located.

W. LID. Low Impact Development is an approach to land development that works with nature to manage storm water as close to its source as possible. LID employs principles such as preserving and creating natural landscape features, minimizing effective imperviousness to create functional and appealing site drainage that treats storm water as a resource rather than a waste product.

X. MUTCD. The Manual on Uniform Traffic Control Devices defines the standards used by road managers nationwide to install and maintain traffic control devices on all public streets, highways, bikeways, and private roads open to public traffic.

Y. NEC. The National Electrical Code is a United States standard for the safe installation of electrical wiring and equipment.

Z. NESC. The National Electrical Safety Code establishes rules which govern: a) methods of grounding; b) installation and maintenance of electric-supply stations and equipment, of overhead supply and communication lines, and of underground and electric-supply and communications lines; and c) operation of electric-supply and communication lines and equipment.

AA. Offsite Facilities. Facilities outside of the boundaries of the subdivision or development site which are designated and located to serve the needs of the subdivision or development or adjacent property, usually lying between a development and existing facilities.

BB. Onsite Facilities. Facilities installed within or on the perimeter of the subdivision or development site.

CC. OSHA. The Occupational Safety and Health Administration is the main federal agency charged with the enforcement of safety and health legislation.

DD. Parcel of Land. A contiguous area of land in the possession or ownership of one person with one tax identification number.

EE. Planning Commission. The Planning Commission of Alpine City.

FF. Preliminary Plat. A map or plat of a proposed subdivision or development with accompanying supplementary documents.

GG. Public Utility Easements. The easements required to place public utilities across any privately owned property.

HH. ROW. A public Right of Way is a strip of land that is granted, through an easement or other mechanism, for transportation purposes, such as for a trail, driveway, rail line or highway. A right-of-way is reserved for the purposes of maintenance or expansion of existing services with the right-of-way.

II. Site Plan. A plan for a commercial, industrial, institutional, governmental or planned residential development in the City.

JJ. Streets. A thoroughfare which has been dedicated and accepted by the City Council, which the City has acquired by prescriptive right or which the City owns, or is offered for dedication on an approved recorded final plat. For further explanation see the streets section.

KK. Subdivision. Any parcel of land that is divided, re-subdivided or proposed to be divided into two or more lots, parcels, sites, units, plots, or other division of land for the purpose, whether immediate or future, for offer, sale, lease, or development either on the installment plan or upon any and all other plans, terms, and conditions. A subdivision includes (1) the division or development of land whether by deed, metes and bounds description, devise and testacia, lease, map, plat, or other recorded instrument; and (2) divisions of land for all land for all residential and nonresidential uses, including land used or to be used for commercial, agricultural, and industrial purposes.

LL. Utilities. Includes drinking water lines; irrigation lines; sanitary sewer; storm, land and groundwater drains; gas lines; electric power lines; cable television and telephone lines; underground conduits; and junction boxes and all appurtenances to the above.

Section 200. Improvement and Design Requirements.

SECTION INDEX

200.010. General.
- A. Easement.
- B. Traffic Control.
- C. Survey.
- D. Temporary Controls.
- E. Landfill, Construction Debris, or Garbage.

200.015. Specialized Engineering.
- A. General
- B. Geotechnical Engineering.

200.020. Construction Plans.
- A. General.
- B. Plan Sheets.
- C. Electric and Communication Plans.
- D. Street, Parking Lot and Driveway Plans.
- E. Sanitary Sewer, Storm, Land and Groundwater Drain Plans.
- F. Drinking Water and Pressurized Irrigation Plans.
- G. Landscaping Plans.
- H. Irrigation Canal and Pipe Plans.

200.030. Street Improvements.
- A. General.
- B. Access
- C. Cul-de-sacs.
- D. Curbs, Gutters, and Sidewalks.
- E. Partial-Streets Widths.
- F. Driveway and Intersection Location.
- G. Parking.
- H. Reverse Frontage Lots.
- I. Temporary Turn-Arounds.
- J. Allowable Grades.
- K. Stamped Concrete or Pavers.
- L. Precast Concrete or Block Walls.
- M. Pedestrian Ramps.
- N. Horizontal and Vertical Curve.

200.040. Utility Improvements.
- A. General.
- B. Communication.
- C. Electric.
- D. Pressurized Irrigation.
- E. Sanitary Sewer.
- F. Storm Drain.
- G. Drinking Water.

200.010. General.

A. Easements. Developer shall provide easements for all utility extensions through private property. Developer shall also provide a 10 foot public utility easement along public right-of-ways or streets, along all exterior property boundaries of the development, and 5 foot public utility easements along all interior property lines of the development. If setbacks are less than 10 feet then public utility easements shall be the extent of the setback.

B. Traffic Control. A traffic control plan shall be submitted to the City prior to construction in or along public streets. All traffic control shall comply with APWA 01 55 26 (Traffic Control) and the MUTCD.

C. Survey. The alignment of the side property lines for each lot in a subdivision shall be marked in the top back of curb with a lot line witness marker that meets the requirements and specifications of APWA 31 05 10 (Boundary Markers and Survey Monuments). Developer shall provide survey bench marks and monuments as required by the City Engineer or his/her designee.

All property corners shall be marked with a rebar corner marker that meets the requirements and specifications of APWA 31 05 10 (Boundary Markers and Survey Monuments). Corners must be marked before acceptance of a subdivision's improvements by the City. The rebar must be offset 2 to 4 inches by a steel tee post four feet out of the ground on the property line alignment.

D. Temporary Controls. Temporary controls such as noise, dust, mud, surface water, ground water, pollution and erosion controls shall be made. Controls shall meet the requirements and specifications of APWA 01 57 00 (Temporary Controls). The pumping of groundwater across sidewalks, into gutters or into the sanitary sewer system is prohibited.

E. Landfill, Construction Debris or Garbage. No buildings, paved parking lots, paved roads, curb, gutter, or sidewalks are allowed to be located over landfills, construction debris, or garbage.

200.015. Specialized Engineering.

A. General. Any specialized engineering beyond the expertise of city staff such as, but not limited to, geotechnical, traffic, environmental, hillside, floodplain, bank stabilization and erosion control will require the review of qualified consultants. All review costs shall be paid by the property owner/developer.

B. Geotechnical Engineering. All Major subdivisions, as outlined in the Development Code, shall be required to submit a site specific geotechnical report. The geotechnical report shall include sufficient subsurface exploration, laboratory testing and geotechnical engineering analysis to render design level geotechnical recommendations and opinions regarding slope stability and required mitigation to protect planned or future development above and below the slope(s) from earth deformations and other adverse soil or geologic conditions.

All work completed in connection with the site specific geotechnical report shall be performed by an experienced geotechnical engineering firm and under the direct supervision and direction of a professional geotechnical engineer properly licensed in the state of Utah.

The scope of work described below is considered the minimum requirement for the geotechnical investigation. The geotechnical firm (Consultant) shall use their experience and engineering judgment in conjunction with the minimum requirements outlined below to develop an appropriate site-specific geotechnical scope of work and report.

1. Field Explorations. Prior to commencing field explorations the geotechnical engineer shall review available geologic maps, aerial photographs and other pertinent literature to develop an understanding of the site and its geologic setting.

   Locate utilities within areas of explorations by notifying the appropriate local one-call state utility locate service. Independent private utility locates may be required for utilities not identified by the local one-call service. Complete subsurface explorations, as many as needed to obtain a representative sample of all soil conditions for the entire site, but specifically shall be obtained for proposed roadway locations and residential building.

   Boring (s) shall be located within close proximity to slope crests so as to render a representative soil profile of the slope for analysis. The boring(s) shall extend to a minimum depth of 15 feet

below the tow of the slope. For example, if a 30-foot tall slope is being evaluated the boring shall extend at least 45 feet below the top of the slope. Borings shall extend through existing fill materials so that at least one sample is collected in native soil. Adjust boring depths for anticipated site development cuts and fills and for known soil conditions.

The geotechnical shall consider past property use and location. Additional soil borings shall be planned for sites located in areas that are known or suspected to have had previous slope deformations or seeps, springs or other adverse features. Special attentions shall be given to identifying, to the extent practical, the presence and extent of existing fill.

Collect a minimum of four (4) soil samples in the upper ten (10) feet of the profile and at intervals of five (5) feet thereafter. Adjust sampling intervals to include major changes in soil layering. Collect a sufficient number of undisturbed samples in fine-grained soils to properly assess strength and consolidation properties. Perform split barrel sampling in granular soils. Field blow counts should be corrected for energy and depth and presented as Standard Penetration Test (SPT) blow counts on the soil boring logs.

Field classify encountered soil in accordance with the American Standard for Testing and Materials (ASTM) and Unified Classification System (USCS).

Borings encountering bedrock shall be extended a minimum of 5 feet into the bedrock. Rock coring equipment shall be used where practical to aid in assessing rock properties. Where cores are collected, Rock Quality Designator (RQD) values should be presented on the boring logs.

2. Laboratory Testing. Samples collected in the field shall be properly packaged to avoid disturbance or freezing and transported to an accredited geotechnical and materials testing laboratory for further observation and testing. Laboratory testing shall be performed under the direction of a Utah licensed professional geotechnical engineer and in accordance with appropriate ASTM standards. At a minimum laboratory testing shall include the following:

    a. Sieve analysis – determine grain size distribution and percent fines (minus 200 sieve)
    b. Atterberg tests – classification, indexing, shrinkage and expansiveness
    c. In-place density
    d. Natural moisture content
    e. Shear strength – Direct Shear and/or Triaxial Shear

    Additional laboratory testing may be required to address site conditions and provide necessary engineering properties for analysis. The geotechnical engineer shall use his professional judgment and local experience to determine an appropriate scope for laboratory testing.

    Laboratory test results shall be presented in the Geotechnical Report, on individual summary sheets in the report appendix or on the boring logs.

3. Geotechnical Report Requirements. The results of the field and laboratory programs shall be evaluated by a Utah registered professional geotechnical engineer. Based on the results of their evaluation, an engineering report shall be prepared that details the results of the testing performed, provides logs of the borings and a diagram of the site/boring layout and provides geotechnical recommendations and information regarding following:

    a. General suitability of the site for the planned development
    b. Recommended precautions and limitations
    c. Subsurface exploration procedures
    d. Soil and rock conditions encountered
    e. Groundwater depth during and after drilling
    f. Geologic setting
    g. Geologic hazards (ie – fault, slide, rock fall, etc.)
    h. Slope stability including provisions, recommendations and designs to mitigate the effects of unstable slopes and other geologic hazards that may adversely impact planned developments above and below the slope(s)
    i. Special design and construction provisions for footings or foundations near steep slopes, including type and depth of foundation system and set back distance from slopes
    j. Surface water runoff control and drainage

k. Subsurface drainage
l. Site grading and earthwork requirements, as appropriate

Detailed individual boring logs and graphical cross sections summarizing soil / rock profiles and slope stability analysis and results shall be included in the geotechnical report. The logs shall contain sufficient detail to render a clear description of the soil stratigraphy, soil descriptions and classifications, SPT blow counts, sample locations and depths, ground water depths and appropriate laboratory test results. Individual boring logs shall include a description of the boring location, exploration equipment used, relative or actual elevation, date of exploration and other pertinent information relative to the field exploration. The cross sections shall contain sufficient detail to render a clear description of the slope stability analysis results and any mitigation measures required. The cross sections shall contain soil profile data and a summary of engineering properties and parameters used in the analysis for each significant soil / rock layer.

The final geotechnical report shall bear the geotechnical engineer's stamp and seal. One (1) electronically submitted PDF copy of the report shall be delivered to the City of Alpine within sufficient time for review and comment. The City will have the report reviewed by its own geotechnical engineer. The cost of that review will be borne by the applicant.

200.020. Construction Plans.

A. General. The following instructions are for the purpose of standardizing the preparation of construction plans to obtain uniformity in appearance, clarity, size, and style. Plans and designs shall meet the standards defined in the specifications and drawings hereinafter outlined. All drawings and/or prints shall be clear and legible and conform to good engineering and drafting room practice.

Include the following in construction plans for all developments:

1. A copy of the proposed final plat or site plan;
2. A plan view of the entire project showing all utilities, roads, and appurtenances;
3. Plan and profiles of all storm, land and groundwater drains, sanitary sewer, curb, gutter, and irrigation;
4. Detail drawings of street cross sections according to the standard drawings and other detail drawings only for items not found in the City standard drawings. Detail drawings shall be to scale and completely dimensioned and described. All items shall be designed in accordance with minimum requirements established by the City Construction Standards;
5. Complete plans for all off-site work to be done in conjunction with the project;
6. A stamp and signature of a Civil Engineer licensed in the state of Utah on each plan sheet, detail drawing, and design sheet;
7. Engineer's take off quantities and cost estimate for all construction work related to the project;

B. Plan Sheets. Include the following on each plan sheet:

1. North Arrow;
2. A standard engineering scale between 1 inch equals 10 feet and 60 feet. A scale of 1 inch equals 100 feet may be used on the plan view of the entire project if necessary to fit project on one sheet;
3. Title block along right side of sheet with title of drawing in lower right corner. Include in title block:
    a. Name of subdivision and plat or site plan;
    b. Name of city;
    c. Specific type of drawing (construction drawings, plan view, plan and profiles, off-site construction, detail drawings);
    d. Name of engineer, surveyor, or firm preparing drawings;
    e. Drawing number of total number of drawings;
4. Also include the following with profile drawings:
    a. Vertical scale of 1 inch equals 1, 2, 3, 4, 5, or 6 feet;
    b. Reference to the vertical datum. The 1929 or 1988 North American Vertical Datum (NAVD29 or NAVD88) shall be used for all elevation data;
    c. Benchmark location and elevation for checking construction;
    d. Stationing aligned from plan view with the profile view;
    e. Existing ground, ditch, and utility lines;
    f. A sheet index on each sheet showing profiled area in relation to the overall project.

C. Electric and Communication Plans. Construction plans must include the location of all existing poles, transformers, secondary junction boxes, gas lines, sectionalizers, overhead electrical wire and overhead

communication cable. Developers will be required to work separately with owners of these companies to obtain the necessary approvals from them.

D. Street, Parking Lot, and Driveway Plans. Include the following for curb, gutter, storm, land and groundwater drains, drainage structures, sidewalks, and street surfacing plans:
   1. Plan and profile for top back of curb for each side of the street. Label profile line as top back of curb for both sides of street if it is the same;
   2. Stationing and top back of curb elevations with curve data for curb returns;
   3. Flow direction and type of cross drainage structures at intersections with adequate flow line elevations;
   4. Type of curb and gutter if other than the standard twenty-four inch curb and gutter in the standard drawings;
   5. Location and width of driveways;
   6. Street cross sections with all proposed and existing utilities and base sections as per soils report and Construction and Development Standards;

E. Sanitary Sewer, Storm, Land and Groundwater Drain Plans. Include the following for sanitary sewer, storm, land and groundwater drain plans:
   1. Plan and profile of all new and existing mains and manholes;
   2. Box and manhole size, location, and elevations of flow lines and rim;
   3. Location, size, grade, and type of pipe of new and existing mains;
   4. Location of each lateral with distance stubbed back into property clearly drawn and dimensioned;
   5. Storm water calculations per the Alpine City Storm Water Drainage Design Manual and Appendicies;
   6. Storm inlet boxes shall be located on street corners and or property lines.

F. Drinking Water and Pressurized Irrigation Plans. Include the following for drinking water and pressurized irrigation plans:
   1. Location, size, and type of pipe of new and existing water mains;
   2. Location of valves, fittings, hydrants, boxes, meters, and appurtenances;
   3. Minimum cover;
   4. Location of each lateral with distance stubbed back into property clearly drawn and dimensioned;
   5. Looping of the drinking waterline will be required at the discretion of the City Engineer or his/her designee to provide adequate fire flows and redundancy.

G. Landscaping Plans. For landscaping that will be maintained by the City, developments with landscaping restrictions (Three Falls, Summit Pointe, etc.), or a homeowner's association submit one copy of the landscaping plans including all irrigation system layouts, details, legends, and drawings. These project plans shall meet the requirements of the Section 900. Landscaping and Section 950. Irrigation Sprinkler Systems, as well as the specific requirements of the development in which they are located.

H. Irrigation Canal and Pipe Plans. Plans that affect canals or irrigation pipes must be stamped approved by those responsible for their maintenance before they will be approved by the City.

200.030. Street Improvements.

A. General. The Developer shall construct all streets and appurtenances required for the development as specified by the City Council in accordance with the City Construction and Development Standards and/or other codes adopted by the City. The design and all street work shall be done as directed and under the supervision of the City Engineer or his/her designee.

B. Access. Access requirements shall be in accordance with the Development Code.

C. Cul-de-sacs. The maximum length of a cul-de-sac is 450 feet measured from the nearest right-of-way line of the adjoining street to the center of the cul-de-sac. The minimum radius of the cul-de-sac is 60 feet at the property line.

D. Curbs, Gutters and Sidewalks. Curbs, gutters, and sidewalks shall be built along all public streets according to the standard drawings. All curbs, gutters, and sidewalks shall connect to existing curbs, gutters, and sidewalks within a reasonable area as determined by the City Engineer or his/her designee.

E. Partial-Streets Widths. Per Alpine City Development Code

F. Driveway and Intersection Location. Driveways and street intersection locations shall be designed according to Alpine City Transportation Master Plan. No driveway shall be constructed within 40 feet from an adjoining street. The distance is measured from the adjoining street's Top Back Curb (TBC) to the edge of driveway for access.

Curb cuts shall only be allowed for driveways. Driveways shall be a minimum of 3 feet away from any above grade utility box and curb cuts for driveways must be a minimum of 6-inches away from the property line. All accesses and streets onto arterials must be approved by the City Engineer or his/her designee.

G. Parking. Per Alpine City Development Code.

H. Reverse or Double Frontage Lots. Per Alpine City Development Code

I. Temporary Turn-Arounds. Per Alpine City Development Code.

J. Allowable Grades. Per Alpine City Development Code

K. Stamped Concrete or Pavers. Alpine City does not allow colored/stamped concrete or pavers on city owned concrete flatwork unless recommended by the Planning Commission and approved by the City Council.

L. Precast Concrete or Block Walls. The design of all walls greater than four feet of exposed height must be approved through the Building Department. Design must be stamped and signed by a licensed professional civil engineer registered in the state of Utah.

M. Pedestrian Ramps. Pedestrian ramps shall be placed at all corners of intersections and at all other locations of regular pedestrian traffic across roads as determined by the City Engineer or his/her designee. All ramps shall conform to the requirements of the Americans with Disabilities Act and City standards.

N. Horizontal and Vertical Curve. Per Alpine City Development Code

200.040. Utility Improvements.

A. General. It shall be the responsibility of the Developer to connect to existing utilities or improvements wherever they are located and extend those improvements to and through the development. Workmanship and details of construction shall be in accordance with the City Construction Standards and/or other codes adopted by the City. All work shall be done under the supervision of the City Engineer or his/her designee.

B. Communication. Communication lines shall be underground except when the City Engineer or his/her designee feels that such underground lines are not in the best interest of the City.

C. Electric. Electrical lines shall be underground except when the City Engineer or his/her designee feels that such underground lines are not in the best interest of the City. Lines shall be located opposite of water and pressurized irrigation lines.

D. Pressurized Irrigation. The Developer shall connect the development with the city pressurized irrigation system with all appurtenances and shall make such pressurized irrigation available to each lot or unit within the development. Adequacy of supply and sizes of pressurized irrigation mains shall be established by the City Engineer or his/her designee. Meter boxes shall be located per Alpine City Standard Details.

E. Sanitary Sewer. The Developer shall provide each lot with a sanitary sewer system in accordance with the ordinances of the City. All measures should be taken to utilize a gravity sewer system before the City will consider a pumped system. All said work shall be done as directed and under the supervision of the City Engineer or his/her designee.

F. Storm Drain. The Developer shall provide on-site storm drainage facilities according to the storm water Drainage Design manual and in accordance with the ordinances of the City. Storm drainage systems shall incorporate Low Impact Development (LID) systems. The maximum allowable storm water discharge from any commercial and industrial development will be limited to 0.07 cfs/acre of development. Individual lots shall retain the 90^{Th} Percentile Storm.

G. Drinking Water. The Developer shall connect the development with the city drinking water system with all appurtenances and shall make such drinking water is available to each lot or unit within the development. Adequacy of supply and sizes of drinking water mains shall be established by the City Engineer or his/her

designee. Pipes shall be located opposite from electrical lines. Looping of the drinking waterline will be required at the discretion of the City Engineer or his/her designee to provide adequate fire flows and redundancy. Meter locations shall be per Alpine City Standard Details.

Section 250. Inspection and Testing.

SECTION INDEX

250.010. General.
A. Quality Assurance.
B. Submittals.
C. Preconstruction Meeting.
D. Inspection and Testing Notification.
E. Testing and Sampling.
F. Testing Agency.
G. Work without Required Inspection and Testing.
H. Inspection and Testing Fees.
I. Sub-standard Work and Pay Factors.
J. Weekly Progress Meetings.
K. Road Construction.
L. As-Built Survey.
M. Acceptance of Improvements.

250.020. Earthwork.
A. Compaction and Moisture Content Tests.
B. Red-head Inspection.
C. Proof Roll Inspection.
D. Thickness Test.

250.030. Landscaping and Irrigation Sprinkler Systems.
A. Plant Material Inspection.
B. Sprinkler System Assembly Inspection.
C. Fall Sprinkler Winterizing Test
D. Spring Sprinkler Energizing Test.
E. Final Acceptance Inspection.

250.040. Portland Cement Concrete Work.
A. General.
B. Slump, Temperature, and Air Entrainment Test.
C. Compression Test.
D. Forms and String Line Inspection.
E. Gutter Drainage Inspection.
F. Thickness Test.
G. Curing Inspection.

250.050. Pressurized Irrigation.
A. General.
B. Main Line Inspection.
C. Pressurized Irrigation Service Inspection.
D. Pressure Test.
E. Leakage Test.

250.060. Sanitary Sewer.
A. General.
B. Main Line Inspection.
C. Service Inspection.
D. Air Pressure Test.
E. Video Inspection.
F. Deflection Test.

250.070. Storm, Land and Groundwater Drains.
A. General.
B. Main Line Inspection.
C. Air Pressure Test.
D. Video Inspection.
E. Deflection Test.

250.080. Streets.

A. Asphalt Pavement Material Tests.
B. Compaction Tests.
C. Grading Inspection.
D. Thickness Test.
E. Profile Tolerance Inspection.
F. Asphalt Concrete Temperature Test.
G. Asphalt Paving Limitations.

250.090. Drinking Water.

A. General.
B. Main Line Inspection.
C. Drinking Water Service Inspection.
D. High Chlorine Test.
E. Pressure Test.
F. Leakage Test.
G. Bacteria Test.

250.010. General.

A. Quality Assurance. The following work shall be subject to the inspection and testing requirements of this Section:

1. Work on existing or proposed City property;
2. Work on property that will be owned by a property owners association;
3. Work on existing or proposed streets, easements, or right-of-ways;
4. Work on existing or proposed City utilities.

The Contractor must ensure that all inspection and testing required by these standards is preformed and accepted by the City Engineer or his/her designee. The Contractor must also ensure that any additional inspection and testing required by the City or a testing company is performed and accepted by the City. In projects other than those bid out by the City, the Developer is ultimately responsible for the work of the Contractor.

B. Submittals. Contractor shall turn in submittals for all testing not performed by the City.

1. *Field Test Report.* Contractor must submit original field test report immediately to City whenever possible. Reports may not be submitted later than the end of the current day.
2. *Laboratory Test Report*. Submit original report to the City within 48 hours after test results are determined.

Material and Equipment Specifications. One copy of the manufacturer's specifications and manuals for equipment and materials used must be submitted to the City 7 days before the pre-construction meeting.

C. Preconstruction Meeting. The Contractor must schedule a preconstruction meeting with the City's engineering department before any work on a new development or City project may begin.

The Contractor, Developer, project engineer, and all sub-contractors must be present at the preconstruction meeting. Any sub-contractor not attending the preconstruction meeting must schedule an additional preconstruction meeting with the City before beginning work. Work must begin within 4 weeks of the preconstruction meeting or a new preconstruction meeting must be scheduled by the Contractor at the discretion of the City Engineer.

D. Inspection and Testing Notification. The City may contract with a private company to conduct any inspections or testing specified to be performed by the City. All inspections and tests must be scheduled with the City or company contracted by the City a minimum of 1 full business day before needed. Requests for inspection on work requiring continuous inspection shall be made 3 full business days prior to commencing the work.

E. Testing and Sampling. The City Engineer or City Inspector may require that sampling be performed in their presence, in which case the Developer or Contractor shall be notified of this requirement in writing at the time the building permit is issued, or at the preconstruction meeting, or when construction drawings are released by the City for construction, as applicable.

Each sample or test shall be accompanied by the following written data, which shall be reported to the City with test results:

1. Name of Project.
2. Name of Developer/Contractor.
3. Project Street Address.
4. Appropriate Test Name.
5. Date of Sampling.
6. Sample Number (if more than one sample per day).
7. Name of technician who performed the testing.
8. Location of sample.

F. Testing Agency. All materials testing, whether in a laboratory or in the field, shall be conducted by a testing agency approved by the City Engineer or his/her designee.

G. Work without Required Inspection and Testing. Any work performed without required inspection or testing will give the City the option to call the bond covering that portion of the improvements in violation, or, require the removal and replacement of the un-inspected work. For City projects, the City Engineer may also accept the work at a reduced price if the lowest pay factor is applied.

H. Inspection and Testing Fees. Inspection fees and/or connection fees shall be paid and permits required shall be obtained prior to commencement of construction.

I. Sub-standard Work and Pay Factors. If any inspection or test indicates that work does not meet City standards the City Engineer may require that the work be redone. If the work has a pay factor option in the standards, the City Engineer may accept the work at a reduced price upon condition that the pay factors outlined in the City standards apply. Payment reduction amounts shall either be assessed to the developer as a fee based upon bond estimates for the work, or be applied against payments to Contractors for City contracts. When any work is done to a lower standard than allowed for in the pay factor tables the work shall be redone until it meets City standards.

J. Weekly Progress Meetings. At the pre-construction meeting it will be determined if weekly construction meetings are required. The City Engineer or his/her designee, City inspectors, the Contractor, and sub-contractors shall be in attendance.

K. Road Construction. Road construction may not commence until all underground utilities (both City and privately owned) are installed and pass all the inspections and tests required by these standards.

L. As-Built Survey. The Contractor shall notify the City to survey all underground utilities either installed or uncovered in the course of construction. Contractor shall give the City 24 hour's notice to survey utilities.

M. Acceptance of Improvements. Inspections made by the City or a company hired by the City to determine compliance with the specifications do not imply final acceptance of the work. The City requires the completion of all facilities before any are accepted for maintenance. The following inspections must be scheduled and passed before final acceptance of any improvements:

1. *End of Construction Inspection.* The Contractor must schedule with the City an end of construction inspection once all the improvements in a development or project are completed according to the Construction and Development Standards.
2. *Final Acceptance Inspection.* One year after the Contractor or Developer passes the end of construction inspection, he or she must schedule a final acceptance inspection.

If the Contractor or Developer does not pass one of these inspections a punch list of work items necessary to pass the inspection will be given to the Contractor or Developer within 2 business days of the inspection. The Contractor or Developer must reschedule inspections with the City until the project or development passes the inspection.

All improvements shall be free from defects, damage, or debris at the time of these inspections. The Contractor or Developer shall not be responsible for debris or damage not caused as a result of his or her work or quality of work.

Any faulty or defective work shall be corrected by the Contractor within 30 days of the failed inspection or according to the contract the City has with the Contractor.

If the Contractor or Developer fails to do so, the City Engineer or his/her designee shall have such repairs made, and the cost of such repairs shall be paid by the Developer together with 25% in addition thereto for stipulated damages for such failure on the part of the Developer to make the repairs.

250.020. Earthwork.

A. Compaction and Moisture Content Tests. The Contractor will test all sub-grade and fill material for compaction and moisture content and will provide these tests to the city within 48 hours of testing. Test locations shall be determined by the City.

1. *Trenches.* Tests will generally be taken 1 per 200 lineal foot of trench per 8 inch lift.
2. *Streets.* Tests will generally be taken 3 per 200 lineal foot of street per 8 inch lift.
3. *Other Cuts and Fills.* Tests will generally be taken 1 per 2,000 square feet of compacted area.

B. Red-head Inspection. The project engineer must provide red-heads for all grade work when brought to within 3 inches of finish grade. The City must inspect and accept finished grading to the engineered red-heads.

C. Proof Roll Inspection. Prior to placing fill material for roadbed backfills, proof roll sub-grade using gross weight of 18,000 pounds per tandem axle, with a tire pressure at least 90 psi, unless otherwise specified by

the soils report. Contractor shall proof roll under the supervision of the City according to the following conditions:

1. *Passes.* All proof roll passes will traverse the sub-grade parallel to the roadbed centerline. All subsequent passes will be offset half the vehicle width until the entire sub-grade is tested.
2. *Mitigation.* The City will analyze, determine, designate, and measure the areas, if any, requiring additional compaction or reconstruction.
3. *Sub-grade Protection.* Once sub-grade passes the proof rolling test, protect the surface from construction operations and traffic damage. Repair all cuts, ruts, and breaks. Keep surface in a satisfactory condition until geotextile fabric or base course has been placed.

D. Thickness Test. Material thickness tests will be conducted by the City when the City Engineer or his/her designee considers it necessary. The total depth shall be reasonably close to that shown on the typical section. Depth analysis shall be made on at least four holes for each section. Base thickness shall be accepted if 75% of the test holes are less than 1/4" below the specified thickness and no individual hole shall be more than 3/4" below the specified thickness.

250.030. Landscaping and Irrigation Sprinkler Systems.

A. Plant Material Inspection. All plant materials are to be inspected and approved by the City at the time of delivery on site. This approval does not constitute final acceptance of any plant material by the City Parks Department Representative. All plant materials will be inspected again at time of final inspection and once again at the end of the warranty period. Any plant found to be unacceptable at any of these inspections shall be immediately removed and replaced.

B. Sprinkler System Assembly Inspection. An on-site inspection shall be conducted by the City after the entire sprinkler system is assembled and prior to backfilling the trenches. During this inspection all fittings, bends, sweeps, valves, sprinkler heads and any other appurtenance on the system shall be surveyed by the City.

C. Fall Sprinkler Winterizing Test. In the fall of the year during the installation and guarantee period, the Contractor shall meet with the City on the project site. The Contractor shall winterize the system by draining all the water and doing everything necessary to insure the protection of the system until spring. Blowing out the lines by compression shall be permitted during the 1 year guarantee. The individuals involved from both parties shall exchange all information necessary for the eventual takeover of the system by the Alpine City Maintenance Personnel.

D. Spring Sprinkler Energizing Test. The Contractor with the City Maintenance Personnel in attendance shall energize the sprinkler irrigation system the spring following the fall winterizing test. Contractor shall repair all defects found as a result of winter damage, improper installation, improper maintenance, defective materials or inadequate sprinkler drainage.

E. Final Acceptance Inspection. At the end of the guarantee period, all landscaping and irrigation sprinkler systems must then be inspected and tested by the City. As-built drawings shall be furnished to the City at the time of the final inspection.

Irrigation sprinkler systems must operate in a satisfactory manner, with a full uniform coverage of the areas that are indicated to be sprinkled. Sprinkler heads shall be adjusted to proper level.

Landscape and irrigation sprinkler systems will not be inspected for acceptance in parts. Where inspected work does not comply with requirements, Contractor shall replace rejected work and continue specified maintenance until reinspected by the City and found to be acceptable. Remove rejected plants and materials promptly from the project site.

250.040. Portland Cement Concrete Work.

A. General. All materials and processes involved in concrete work shall be subject to inspection and testing as detailed in the various paragraphs of this section and in general compliance with ASTM E105-54T. Results of tests performed by laboratories approved by the City to the satisfaction of the City Engineer or his/her designee shall be accepted by the supplier as a basis for acceptance or rejection of any and all materials.

The latest appropriate ASTM tests and methods shall be considered to be standard, and will include but not be limited to concrete, cement, aggregates additives, curing compounds, parting compounds and jointing materials. A copy of all batch tickets for concrete placed shall be submitted to the City.

B. Slump, Temperature and Air Entrainment Test. The Contractor shall test slump, temperature, and air entrainment on every fifty cubic yards or less of concrete placed each day. Tests shall be taken after ½ to 1 yard has been poured from the mixer. Once a sample is taken the concrete pour shall be stopped until tests show that the concrete meets City standards. Concrete that does not meet mix design requirements for slump, temperature, and air entrainment shall not be used. Any that may already have been poured shall be removed before hardening.

C. Compression Test. The Contractor shall test compression on every fifty cubic yards or less of concrete placed each day according to ASTM C143, C231. C1064, C172, and C31. Three cylinder specimens shall be taken for each test, one shall be broken at 7 days, one at 28 days and the third held for 45 days after submittal in case further testing is required.

Specimens shall attain the specified strength at 28 days. One lot is 1 day's production. A lot with sub-standard compressive strength may be accepted at reduced price if the appropriate pay factor is applied to the whole lot. The following table outlines the pay factors for sub-standard Portland cement concrete strength:

PORTLAND CEMENT CONCRETE
COMPRESSIVE STRENGTH PAY FACTORS

Pay Factor	**Tolerance (psi below 28 day specified strength)**
0.98	1 to 100
0.94	101 to 200
0.88	201 to 300
0.80	301 to 400
0.50	401 to 500
Replace	More than 500

These pay factors may not be applied toward concrete in structures.

D. Forms and String Line Inspection. The City shall inspect all forms and string lines before concrete may be placed.

E. Gutter Drainage Inspection. The City shall inspect all gutters for drainage prior to paving. Water shall be let into all gutters and any gutters with standing water in excess of 1/4 inch after runoff shall be replaced. Contractor must supply water truck for gutter drainage inspection.

F. Thickness Test. The City shall determine the number, if any, and location of core tests necessary to ensure the proper thickness of Portland cement concrete. Tests shall be taken at equal intervals in a test area. A test area shall be defined as a total area placed at the same time and by the same process. The average thickness shall then be determined from all the cores taken. Tests shall be taken and verified by a certified testing lab, paid for by the Contractor.

When the average thickness is more than 0.25 inches below the specified thickness, a minimum of 1 core per 1,500 square feet of pavement shall be taken. Work with sub-standard thickness may be accepted at reduced price if the appropriate pay factor for the lowest tested thickness is applied to all of the sub-standard work. The following table outlines the pay factors for sub-standard Portland cement concrete thickness:

PORTLAND CEMENT CONCRETE
THICKNESS PAY FACTORS

Pay Factor	Tolerance (inches below specified thickness)
1.00	0.00 to 0.25
0.90	0.26 to 0.50
0.70	0.51 to 0.75
0.50	0.76 to 1.00
Replace	More than 1.00

G. Curing Inspection. The City shall inspect the curing of all Portland cement concrete work within 24 hours of pouring the concrete.

250.050. Pressurized Irrigation.

A. General. The inspections and tests in this section are required for all pressurized irrigation construction in the City boundaries and on all construction relating to the City pressurized irrigation system outside the city boundaries.

B. Main Line Inspection. The City must inspect all pressurized irrigation main line installation on an ongoing basis. Inspection notification must be given before any construction of the main line may begin. All crosses, tees, bends, valves, and drains must be inspected and surveyed by the City before they are backfilled.

C. Pressurized Irrigation Service Inspection. The City must inspect all pressurized irrigation services before service trenches are backfilled. The City must be able to survey services at the main during the inspection.

D. Pressure Test. The Contractor must pressure test all pressurized irrigation systems, system extensions and service laterals to the setter in the presence of the City Engineer or his/her designee or have tests documented and submitted by a certified testing company approved by the City. Pressure tests must meet the requirements and specifications of APWA 33 08 00 (Commissioning of Water Utilities). Provide a 210 psi test pressure for 2 hours unless specified otherwise. The pressure of 210 psi must be provided at the highest point in the section of pipe being tested unless elevations are such that this would create pressures over 250 psi at the lowest point in the section of pipe tested. In such a case, consultation with the City Engineer is required and AWWA standards will be considered.

E. Leakage Test. For test lengths of pipe greater than 1,500 feet, a leakage allowance may be considered. There will be no allowance for leakage on test sections less than 1,500 feet. When allowed, leakage tests shall be conducted concurrently with the pressure tests. Leakage shall be defined as the quantity of water that must be supplied into the newly laid pipe, or any valved section thereof, to maintain pressure within 5 psi of the specified test pressure after the air in the pipeline has been expelled and the pipe has been filled with water.

No pipe installation will be accepted if the leakage is greater than that determined by the following formula:

$$Q \equiv \frac{LD * \sqrt{P}}{133{,}200}$$

In which Q is the allowable leakage, in gallons per hour; L is the length of pipeline tested in feet; P is the average test pressure, in pounds per square inch (gage) and D is the nominal diameter of the pipe in inches.

If any test of pipe laid discloses leakage greater than specified, the Contractor shall, at their own expense, locate and repair the defective material until the leakage is within the specified allowance. All visible leaks are to be repaired regardless of the amount of leakage.

250.060. Sanitary Sewer.

A. General. The inspections and tests in this section are required for all sanitary sewer construction in the City boundaries and on all construction relating to the City sanitary sewer system outside the city boundaries.

B. Main Line Inspection. The City must inspect all sanitary sewer main line installation on an ongoing basis. Inspection notification must be given before any construction of the main may begin.

C. Service Inspection. The City must inspect all sanitary sewer services before service trenches are backfilled. The City must be able to survey services at each end during the inspection.

D. Air Pressure Test. Contractor shall conduct a low pressure air test by the following method under the direction of the City Engineer or his/her designee with equipment equal to Cherne Industrial, Inc., or provide proof that test was conducted by a certified testing company. Sanitary sewer pipes with inside diameters of 30 inches or larger shall be leak tested according to manufacturer's specifications.

All wyes, tees, or ends of lateral stubs shall be suitably capped and braced to withstand the internal test pressures. Caps shall be easily removable for future lateral connections or extensions. After a manhole to manhole section of line has been backfilled and cleaned, it shall be plugged at each manhole with pneumatic plugs.

Low pressure air shall be introduced into the sealed line until the internal air pressure reaches 4 psi-G greater than the average back pressure of any ground water that may be over the pipe. At least 2 minutes shall be allowed for the air pressure to stabilize.

The portion of line being tested shall be accepted if the portion under test does not lose air at a rate greater than 0.003 cubic feet per minute per square foot of internal pipe surface or 2.0 cubic feet per minute minimum when tested at an average 3.0 psi-G greater than any back pressure exerted by ground water that may be over the pipe at the time of the test.

The pipe and joints shall also be considered acceptable when the time required in minutes for pressure to decrease from 3.5 To 2.5 psi-G (greater than the average back pressure of any ground water that may be over the pipe) shall not be less than the time shown for the given diameters in the following table:

PRESSURE REDUCTION TIME LIMITS

Pipe Diameter (inches)	Time (minutes)
4	2.0
6	3.0
8	4.0
10	5.0
12	5.5
15	7.5
18	8.5
21	10.0
24	11.5

If the installation fails to meet this requirement, the Contractor shall determine at his/her own expense the source of leakage. He shall repair or replace all defective materials and/or workmanship. All sanitary sewer mains shall be tested, cleaned and accepted by Alpine City before laying the street surface.

E. Video Inspection. Contractor shall clean and provide the City with video inspection of all sanitary sewer main lines **prior to paving**. The City must approve video inspection company.

Cleaning shall be done using a high pressure jet cleaning machine, producing a minimum of 800 psi. Waste water and debris shall not be permitted to enter the City sanitary sewer system, but shall be removed at the lowest manhole of the extension.

Video Inspection shall be done by the Contractor. A digital video disk (DVD or thumb drive) of video inspection and log report shall be submitted by the inspection company to the City Engineer or his/her designee.

Main line determined to be defective by the City Engineer or his/her designee shall be remedied by the Contractor. Contractor shall then clean and video inspect the main lines again.

F. Deflection Test. Contractor shall perform a displacement test on all sewer lines after video inspection. Deflections tests must be conducted in the presence of the City Engineer or his/her designee or be documented and submitted by a certified testing company approved by the City. In no case shall pipe be accepted that has a deflection of more than 5% after it has been backfilled. The Mandrel must be pulled by hand or air. A pipe deflection test shall be required of the Developer/Contractor after backfilling and compaction of the trench.

250.070. Storm, Land and Groundwater Drains.

A. General. The inspections and tests in this section are required for all storm, land and groundwater drain construction in the City boundaries and on all construction relating to the City storm, land and groundwater drain system outside the city boundaries.

B. Main Line Inspection. The City must inspect all storm, land and groundwater drain main lines during installation on an ongoing basis. Inspection notification must be given before any construction of the pipe may begin. All groundwater drains shall be pre-approved by the City Engineer or his/her designee.

C. Air Pressure Test. Contractor shall conduct a low pressure air test for all sealed drains by the following method under the direction of the City Engineer or his/her designee with equipment equal to Cherne Industrial, Inc., or provide proof that test was conducted by a certified testing company. Storm drain pipes with inside diameters of 30 inches or larger shall be leak tested according to manufacturer's specifications. Air pressure tests shall be completed prior to paving.

All wyes, tees, or ends of lateral stubs shall be suitably capped and braced to withstand the internal test pressures. Caps shall be easily removable for future lateral connections or extensions. After a manhole to manhole section of line has been backfilled and cleaned, it shall be plugged at each manhole with pneumatic plugs.

Low pressure air shall be introduced into the sealed line until the internal air pressure reaches 4 psi-G greater than the average back pressure of any ground water that may be over the pipe. At least 2 minutes shall be allowed for the air pressure to stabilize.

The portion of line being tested shall be accepted if the portion under test does not lose air at a rate greater than 0.003 cubic feet per minute per square foot of internal pipe surface or 2.0 cubic feet per minute minimum when tested at an average 3.0 psi-G greater than any back pressure exerted by ground water that may be over the pipe at the time of the test.

The pipe and joints shall also be considered acceptable when the time required in minutes for pressure to decrease from 3.5 To 2.5 psi-G (greater than the average back pressure of any ground water that may be over the pipe) shall not be less than the time shown for the given diameters in the following table:

PRESSURE REDUCTION TIME LIMITS

Pipe Diameter (inches)	Time (minutes)
4	2.0
6	3.0
8	4.0
10	5.0
12	5.5
15	7.5
18	8.8
21	10.0
24	11.5

If the installation fails to meet this requirement, the Contractor shall determine at his/her own expense the source of leakage. He shall repair or replace all defective materials and/or workmanship. All storm drain lines shall be tested, cleaned and accepted by Alpine City before laying the street surface.

D. Video Inspection. Contractor shall clean and then video inspect all storm, land and groundwater drain lines **prior to paving**. The City must approve video inspection company.

Cleaning shall be done using a high pressure jet cleaning machine, producing a minimum of 800 psi. Debris shall not be permitted to enter the City storm drain system.

Video inspection shall clearly show any debris, broken pipe, misaligned pipe, displaced pipe and defective joints for all sections of the main line. All defects and their location shall be detailed on a separate video log report. A digital video disk (DVD or thumb drive) of video inspection and log report shall be submitted by the inspection company to the City Engineer or his/her designee.

Log reports shall be submitted on the City video form or an approved equivalent. Log reports must be submitted with an 11x17 copy of the plans. All manholes in the log report must reference the labeled manholes numbers on the plans. Each manhole must also have a street address clearly shown on the log report.

E. Deflection Test. Contractor shall perform a displacement test on all non-concrete storm drain lines after video inspection. Deflections tests must be conducted in the presence of the City Engineer or his/her designee or be documented and submitted by a certified testing company approved by the City. In no case shall pipe be accepted that has a deflection of more than 5% after it has been backfilled. The Mandrel must be pulled by hand or air. A pipe deflection test shall be required of the Developer/Contractor after backfilling and compaction of the trench.

250.080. Streets.

A. Asphalt Pavement Material Tests. Material tests will be conducted by the Contractor when the City Engineer or his/her designee considers it necessary.

B. Compaction Tests. The Contractor will test all bituminous pavement for compaction and moisture content. Test locations shall be determined by the City but will generally be taken 3 per 200 lineal foot of street or 1 per 2,000 square foot of paved area. Pay factors as per APWA 32 12 16 (Plant-Mix Asphalt Paving) shall apply.

C. Grading Inspection. The sub-grade, sub-base, and road base shall all be graded to an engineered red-head and accepted by Alpine City. Red-heads shall be placed every 50 feet at the crown of the road. If the distance between red-heads and edge of pavement exceeds 25 feet additional redheads shall be installed half way between the crown and edge of pavement. Red-heads shall also be placed every 50 feet at the edge of pavement where there is no curb and gutter.

D. Thickness Test. Material depth tests will be conducted by the City when the City Engineer or his/her designee considers it necessary. The total depth shall be reasonably close to that shown on the typical section.

For City projects, depth analysis shall be made on at least four holes for each section. Base thickness shall be accepted if 75% of the test holes are less than 1/4" below the specified thickness and no individual hole shall be more than 1/2" below the specified thickness. Work with sub-standard thickness may be accepted at reduced price if the appropriate pay factor for the lowest tested thickness is applied to all of the sub-standard work. The following table outlines the pay factors for sub-standard asphalt pavement thickness:

PAVEMENT DEPTH PAY FACTORS FOR CITY PROJECTS

Pay Factor	Tolerance (inches below specified thickness)
0.95	0.00 to 0.25
0.90	0.26 to 0.50
Replace	More than 0.5

For new development, the City will accept nothing less than what the plans call for. Depth analysis shall be made on at least four holes for each section. Base thickness shall be accepted if 75% of the test holes are less than 1/8" below the specified thickness and no individual hole shall be more than 1/4" below the specified thickness. Work with sub-standard thickness will be rejected, removed, and replaced.

E. Profile Tolerance Inspection. Profile tolerance inspections may be required by the City any time within a year of paving. Collector and arterial streets shall meet the "Tolerances" requirements of APWA 32 12 16 (Plant-Mix Asphalt Paving). For local streets profiling, the maximum vertical distance from the pavement surface to a straight edge is:

a. 1/4-inch in 10-feet parallel to centerline.
b. 3/8-inch in 10-feet perpendicular to centerline except at cross section grade breaks.

F. Asphalt Concrete Temperature Test. This test shall be conducted on the first three loads of asphalt concrete installed, and on one in four of all future loads as required by the City. Testing shall be conducted according to the requirements and specifications of APWA 32 12 16 (Plant-Mix Asphalt Concrete Paving). Temperature gauge shall be allowed to stabilize for 1 minute before taking reading if using probe type. If using infra-red "gun" type, reading shall consist of an average of a minimum of 3 readings, where reading is taken immediately after displacing a minimum of 2 inches of material from the surface being tested and the "gun" is within 18" of the surface being tested.

G. Asphalt Paving Limitations. In the event the City Engineer approves a paving plan proposed between November 15th and April 1st, and if temperatures never rise above 60 degrees during the paving process, an overlay in the spring will be required as outlined in the table below. Do not place HMA on frozen base or during adverse climatic conditions such as precipitation or when roadway surface is icy or wet. Use a release agent that does not dissolve asphalt and is acceptable to the City Engineer or his/her designee for all equipment and hand tools used to mix, haul, and place the HMA. Placement of HMA between November 15th and April 1st will be allowed when the air temperature in the shade and the roadway surface temperature are above 45 degrees Fahrenheit. Paving that occurs between the dates below, which requires a spring overlay, shall be finished 1.5 inches below lip of curb to accept the required 2-inch overlay in the spring.

PAVEMENT DEPTH AFTER NOVEMBER 15TH / BEFORE APRIL1ST
TEMPERATURES ARE BETWEEN **45-50 DEGREES** FAHRENHEIT*

Street	Typical	Base Asphalt	Spring Overlay	Total Asphalt
Local / Secondary Access / Parking Lots / Driveway	3"	3"	2"	5"
Collector / Arterial	4"	3"	2"	5"

*See 2017 APWA 32-12-16.13. If temperatures are between 45-50 degrees, the minimum lift to be placed at a time must be 3 inches to retain heat and obtain compaction. 50-59 degrees, 2 inches minimum lift. 60-69, 1.5 inches minimum lift.

PAVEMENT DEPTH AFTER NOVEMBER 15TH / BEFORE APRIL1ST
TEMPERATURES ARE BETWEEN **50-60 DEGREES** FAHRENHEIT*

Street	Typical	Base Asphalt	Spring Overlay	Total Asphalt
Local / Secondary Access / Parking Lots / Driveway	3”	2.5”	2”	4.5”
Collector / Arterial	4”	3”	2”	5”

PAVEMENT DEPTH AFTER NOVEMBER 15TH / BEFORE APRIL1ST
TEMPERATURES ARE ABOVE **60 DEGREES** FAHRENHEIT*

Street	Typical	Base Asphalt	Spring Overlay	Total Asphalt
Local / Secondary Access / Parking Lots / Driveway	3”	3”	n/a	3”
Collector / Arterial	4”	3”	n/a	4”

250.090. Drinking Water.

A. General. The inspections and tests in this section are required for all drinking water construction in the City boundaries and on all construction relating to the City drinking water system outside the city boundaries.

B. Main Line Inspection. The City must inspect all drinking water main line installations on an ongoing basis. Inspection notification must be given before any construction of main line may begin. All crosses, tees, bends, valves and hydrants must be inspected and surveyed by the City before they are backfilled.

C. Drinking Water Service Inspection. The City must inspect all drinking water services before service trenches are backfilled. The City must be able to survey services at the main during the inspection.

D. High Chlorine Test. High Chlorine tests shall meet the requirements and specifications of APWA 33 13 00 (Disinfection). The Contractor must conduct a high chlorine test at every hydrant on a new drinking water main installation. If a hydrant does not exist on the test section, tests must be taken at the end of each line. The chlorine residual shall be at least 25 mg/L.

E. Pressure Test. Pressure test must be conducted after the successful completion of the bacteria test. The Contractor must pressure test all drinking water systems, system extensions and service laterals to the setter in the presence of the City Engineer or his/her designee or have tests documented and submitted by a certified testing company approved by the City. Pressure tests must meet the requirements and specifications of APWA 33 08 00 (Commissioning of Water Utilities). Provide a 210 psi test pressure for 2 hours unless specified otherwise. The pressure of 210 psi must be provided at the highest point in the section of pipe being tested unless elevations are such that this would create pressures over 250 psi at the lowest point in the section of pipe tested. In such a case, consultation with the City Engineer is required and AWWA standards will be considered.

F. Leakage Test. For test lengths of pipe greater than 1,500 feet, a leakage allowance may be considered. There will be no allowance for leakage on test sections less than 1,500 feet. When allowed, leakage tests shall be conducted concurrently with the pressure tests. Leakage shall be defined as the quantity of water that must be supplied into the newly laid pipe, or any valved section thereof, to maintain pressure within 5 psi of the specified test pressure after the air in the pipeline has been expelled and the pipe has been filled with water.

No pipe installation will be accepted if the leakage is greater than that determined by the following formula:

$$Q \equiv \frac{LD * \sqrt{P}}{133{,}200}$$

In which Q is the allowable leakage, in gallons per hour; L is the length of pipeline tested in feet; P is the average test pressure, in pounds per square inch (gage) and D is the nominal diameter of the pipe in inches.

If any test of pipe laid discloses leakage greater than specified, the Contractor shall, at their own expense, locate and repair the defective material until the leakage is within the specified allowance. All visible leaks are to be repaired regardless of the amount of leakage.

G. Bacteria Test. Bacteria tests shall meet the requirements and specifications of APWA 33 13 00 (Disinfection). Tests may only be scheduled at certain regular times set by the City. The Contractor shall be present and open all hydrants or other locations to be tested from. The City shall submit samples to a certified lab to be tested according to state drinking water regulations.

If any sample point fails on the first test, the line will be flushed and re-tested at all sample points. If any sample point fails a second time, the complete line will be re-disinfected and re-tested at all sample points. If any samples come back marked “presence”, which means coliform bacteria is present, the line will be re-disinfected and re-tested at all sample sites. Contractor is responsible to pay for all bacteria tests and retests.

Drinking water services will not be installed until bacteria sample results have been approved by the City Engineer or his/her designee. All testing lab fees shall be paid for by the Contractor.

Section 300. Contractor Requirements.

SECTION INDEX

300.010. General.
A. Contractors Working for a Developer.
B. Contractors Working for the City.
C. Status Verification System.

300.020. Insurance.
A. General.
B. Workers' Compensation.
C. Commercial General Liability Insurance.
D. Automobile Liability Insurance.

300.030. Bonding.
A. General.

300.040. Excavation Permits.
A. General.
B. Contractors.
C. Property Owners.

300.050. Inspection Fees.
A. General.

300.060. Materials Submittals.
A. General.

300.070. Quality Control.
A. General.
B. Materials Production.
C. Testing and Inspection.

300.010. General.

A. Contractors Working for a Developer. Contractors and Sub-Contractors working for a Developer must prequalify before doing any work in existing or proposed City property, streets, easements, or right-of-way and for any work on existing or proposed City utilities. To prequalify the following must be on file in the City Engineer's office:

1. A current Contractor's license specified for project type according to Utah State Code;
2. Insurance information;
3. Contractor information sheet;
4. Project Bond;
5. Excavation Permit;
6. UDOT Permit for construction in state right-of-way; and

Failure to pre-qualify before doing any construction shall constitute grounds for legal action.

B. Contractors Working for the City. Bids for City projects will only be awarded to the lowest responsible bidder with current contractor's license specified for the project type according to the Utah State Code. The City's contractor qualifications and experience forms shall be completely filled out and submitted with bid. Failure to do so is basis to reject the bid. Alpine City reserves the right to determine a non-responsible bidder based upon these forms or any other research conducted by the city.

C. Status Verification System. Contractor agrees that it, and its subcontractors, will register with and use a Status Verification System to verify the federal employment authorization status of all employees hired after July 1, 2009. Contractor, and its subcontractors, will comply, in all respects, with Utah Code Annotated §63g-11-103, as it may be amended from time to time.

300.020. Insurance.

A. General. A Contractor must acquire the insurance stipulated in this section to prequalify to do construction work. The city must receive and accept proof of the insurance before any work may begin. The submittal of said evidence to the City shall not relieve or decrease the liability of the Contractor hereunder.

B. Workers' Compensation. Contractor shall obtain workers compensation insurance as required by State law.

C. Commercial General Liability Insurance. The following commercial general liability insurance must be obtained and submitted on ISO Form CG 00 01 (11/85) or equivalent, occurrence policy, with limits not less than:

1.	General Aggregate	$1,000,000
2.	Products - Comp/OPS Aggregate	$1,000,000
3.	Personal and Advertising Injury	$ 500,000
4.	Each Occurrence	$ 500,000
5.	Fire Damage (any one fire)	$ 50,000
6.	Medical Expense (any one person)	$ 5,000

Also include the follow endorsements or their equivalents attached thereto:

1. ISO Form CG 25 03 (11/85), Amendment of Limits of Insurance (Designated Project or Premises), describing the subject contract and specifying limits as shown above.
2. ISO Form CG 20 10 (11/85), Additional Insured -- Alpine City, Lessees, or Contractors (Form B), naming the City as additional insured and containing the following statement, "This Endorsement Also Constitutes Primary Coverage in the Event of any Occurrence, Claim, or Suit".

D. Automobile Liability Insurance. Contractor shall obtain automobile liability insurance with limits of not less than $500,000 Combined Single Limit per accident. Coverage shall apply to any auto.

300.030. Bonding.

A. General. The owners and/or developers of property shall deposit security with the City prior to recording the final plat to guarantee proper installation of all required improvements in accordance with the plans, specifications, time limitations, and conditions relating thereto as meets with the approval of the City Council or such personnel as the City Council shall designate. Security shall be in the form of cash, an irrevocable letter of credit, surety bond, financial institution bond, or an escrow bond. The amount of the security shall be 110% of the City's estimated costs of the improvements plus the estimated asphalt preservation coat costs.

Irrevocable letters of credit or escrow bonds shall be executed by financial institutions acceptable to the City and authorized to conduct business in the State of Utah, and must be in the form approved by the City. The bond or letter of credit as required by this section must be posted prior to recording. Upon completion of the punch list for the end of construction inspection, the security, less 10%, shall be released to the Developer. Ten percent (10%) of the security amount shall be held for a period of one (1) year following final inspection and acceptance to warrant improvements for this time period. The ten percent retained shall be the amount required as the minimum security. The amount estimated for the asphalt preservation coat shall be deposited to the City in the form of cash and held in escrow prior to recording. These funds will be held until used for the asphalt preservation coat for the applicable development either by the developer or City (see 600.020).

300.040. Excavation Permits. (aka – Street Cut Permit)

A. General. Contractors are required to qualify before obtaining an excavation permit to do construction work unless a project is already approved, bonded and insured. The permit must be approved 48 hours prior to construction. The permitee is given a copy of the permit and plan after the City Engineer or his/her designee has approved and signed them.

The City may stipulate time limits for completion of work and suspend permits for non-compliance. A copy of the excavation permit shall be on site during construction.
For fees related to Excavation Permits, please refer to the Alpine City Consolidated Fee Schedule.

B. Contractors. Contractors are required to submit the following information to obtain an excavation permit:
   1. Copy of Contractors license;
   2. Certificate of Insurance;
   3. License and permit bond;
   4. Detailed drawing of proposed work and traffic control.

C. Property Owners. Individual property owners doing his/her own work for drive approaches and other similar, minor concrete work in the City right-of-way are required to submit the following information to obtain an excavation permit:
   1. Proof of homeowners or similar insurance;
   2. Detailed drawings of the proposed work, including safety, barricades, traffic and pedestrian control.

Any cuts or changes to the curb shall be performed by a licensed contractor who has obtained an excavation permit or building permit.

300.050. Inspection Fee.

A. General. For bonded developments, an inspection fee will be collected. The fee will be for city costs relating to the construction. These costs include but are not limited to survey, inspection, testing and administration. The fee will be estimated based upon previous projects. Portions of the fee not used shall be refunded to the Developer after the punch list of the final acceptance inspection is completed.

If City costs relating to inspection exceed the inspection fee, these costs will be paid for by the developer or they will be deducted from the 10% warranty portion of the bond.

300.060. Materials Submittals.

A. General. Contractors are required to provide materials submittals for all materials to be used to the City for review and approval.
   1. For pre-manufactured items, documentation must be submitted a minimum of 2 weeks before installation and must include sufficient information, including shop drawings, if applicable, to establish models, colors, sizes, installation requirements, etc. that will be used.
   2. For on-site manufactured items, such as asphalt, concrete or base courses, submit mix designs, hot/cold weather installation plans, and materials certifications a minimum of 5 working days prior to planned installation.
   3. Submittals for the following, at a minimum, should be submitted:
      a. All pre-manuctured items meeting city standards such as light fixtures, electrical components, utility fixtures and piping, landscaping, etc.
      b. Hot Mix Asphalt Mix Designs
      c. Portland Cement Concrete Mix Designs
      d. Treated Base Course Mix Designs
      e. Untreated Base Course Job Mix Formulas
      f. Tack and Prime Coats

g. Concrete Curing Compounds

4. Submit copies of all Quality Control testing and inspection reports within 48 hours of placement of materials.

300.070. Quality Control.

A. General. Perform Quality Control work in accordance with applicable materials sections of the APWA Standard Specifications unless otherwise directed.

The contractor is responsible for performing quality control work sufficient to meet requirements of APWA Standard Specifications and to demonstrate compliance with acceptance criteria. The City will perform assurance functions at their discretion and inform the contractor of acceptance or rejection.

B. Materials Production Use UDOT certified facilities for asphalt and Portland cement concrete.

1. Submit verification of Plant Certifications with mix designs.

C. Testing and Inspection. Use UDOT certified laboratories and personnel.

1. Submit names, certificate levels and years of experience of testing agency's Field Technician that are assigned to work. Laboratory must comply with ASTM Standards. Use AMRL certified laboratory and WAQTC/UDOT TTQP certified technicians.
2. Submit verification of lab and personnel with mix designs.

Section 350. Earthwork and Trenches.

SECTION INDEX

350.010. Excavation.
A. General.
B. Safety.
C. In Gravel and Paved Surface Areas.
D. In Areas with Concrete.
E. Rock Excavations.
F. Site Clearing and the Disposal of Excess Materials.

350.020. Sub-surface Pipe Installation.
A. General.
B. Boring or Jacking.
C. Tunneling.

350.030. Sub-grade.
A. Preparation.
B. Soft and Yielding Areas.
C. Trenches.
D. Roads.
E. Structures.

350.040. Fill Material.
A. General.
B. Bedding Material.
C. Engineered Fill.
D. Untreated Base Course.
E. Cement Treated Fill.
F. Defective Fill.

350.050. Slopes, Embankments, Fills and Open Channels.
A. Preparation.
B. Material.
C. Grading.
D. Slope Safety.
E. Erosion and Sedimentation Control.
F. Gabions.
G. Rip Rap and Rock Lining.

350.060. Installation and Compaction of Earth Materials.
A. General.
B. Streets.
C. Soft and Yielding Spots.
D. Backfill in Trenches.
E. Pipe Zone.

350.070. Geotextiles, Geogrids and Geocomposites.
A. General.

350.010. Excavation.

A. General. Excavation shall meet the requirements and specifications of APWA 31 23 16 (Excavation) unless otherwise indicated.

B. Safety. All construction shall be done in accordance with the provisions of the Utah State Industrial Commission, OSHA regulations and APWA 31 23 16 (Excavation). No trenches deeper than 4 feet shall be left open at any time unless construction is in process. When construction is in process only 200 feet of trench may be open at one time and must be completely backfilled before proceeding. No trenches shall be left open at any time unless guarded with adequate barricades, warning lamps and signs.

Any injury or damage resulting from lack of adequate bracing and shoring shall be the responsibility of the Developer/Contractor and the Developer/Contractor shall, at his/her own expense, effect all necessary repairs or reconstruction resulting from such damage. No inspections will be done in unsafe trenches and will be the cause for immediate shutdown at the project until the trench is deemed to be safe by the City Engineer or his/her designee.

C. In Gravel and Paved Surface Areas. Where any excavation occurs in a gravel or paved surface area such as a road, driveway or parking area, the surface shall be restored according to the requirements and specifications of APWA 33 05 25 (Pavement Restoration, requires t-patching on trenches) and the following conditions:

1. *Base.* Only Engineered Fill (Section 350.040.C) may be used as backfill or sub-base material under gravel and paved surfaces. A minimum of 8 inches of untreated base course shall be placed over backfill or sub-base. All fill material shall be placed and compacted to City standards. Flowable fill shall not be allowed for backfill unless authorized by the City.
2. *Surface Maintenance.* The surface shall be maintained by blading, sprinkling, rolling, adding gravel, etc., to maintain a safe uniform surface satisfactory to the City.
3. *Cutting of Pavement.* Before any excavation in a paved area, the surface along the entire excavation shall be cut to provide a vertical joint in the surface. Cut shall be made 6 inches from the edge of excavation in straight lines parallel or perpendicular to the trench or edge of pavement. A pavement saw shall be used for all pavement cutting. If excavation damages the cut pavement, pavement shall be cut again before t-patching. A roto-milled edge shall be acceptable as a cut.
4. *Time Limitation.* All road cuts shall be repaired within 2 working days of excavation unless otherwise authorized by the City Engineer or his/her designee.
5. *Cold Weather Patching.* Trenches cut during winter months or when roadbed temperatures and temperatures in the shade are less than 40 degrees (APWA 33 05 25) or when asphalt plants are not operating, shall be patched the same day of the cut with a good quality cold mix according to the requirements and specifications of APWA 32 12 17 (Cold-Mix Asphalt Paving). These trenches shall be maintained until asphalt plants open. When asphalt plants open, the temporary cold patch shall be removed and a new t-patch (per APWA Plan 255) of hot mix asphalt shall be placed. All cold mix patches shall be replaced with hot mix patches within 30 days of the opening of the hot mix plant.
6. *Adjust Incidental Structures to Grade.* Adjust incidental structures to grade according to APWA 33 05 14 (Utility Grade Adjustment). City standard concrete collars around valves and manholes shall be installed within 1 year from the time that pavement is placed or at the time of an overlay.
7. *Residential vs Non-residential streets.* APWA 33 05 25 mentions "*Match existing pavement thickness plus 1 inch, but not less than four (4) inches. Maximum thickness is six (6) inches in residential areas and eight (8) inches in non-residential areas."* Residential areas are to be defined as Local, Secondary Access, or Parking Lots per the most currently adopted Alpine City Transportation Master Plan. Non-residential is to be defined as Collector or Arterial Class streets per the most currently adopted Alpine City Transportation Master Plan.

D. In Areas with Concrete. When damaged, existing concrete improvements shall be removed and replaced to the next joint or scoring line beyond the damaged or broken sections. In the event that joints or scoring lines do not exist or are three or more feet from the removed or damaged section, the damaged portions shall be removed and reconstructed to neat, plane faces. All concrete work shall meet the requirements and specifications of Section 650. Portland Cement Concrete Work and APWA 33 05 25 (Pavement Restoration).

E. Rock Excavations. Rock excavations shall meet the requirements and specifications of APWA 31 23 17 (Rock Removal).

F. Site Clearing and the Disposal of Excess Materials. Site clearing shall be conducted according to APWA 31 11 00 (Site Clearing). All excavation material, which is not required for construction or is unsuitable for fill material, shall be immediately disposed of by the Contractor. All roads, sidewalks, curbs, gutters and ditches shall be kept clean of excavated material except as outlined in Title 14.08.05 (Clean Streets) of the Alpine City Municipal Code.

All demolition work shall meet the requirements and specifications of APWA 02 41 13 (Selective Site Demolition), APWA 02 41 14 (Pavement Removal) and APWA 02 41 15 (Pavement Pulverizing).

Removal and disposal of Asbestos Cement Pipe shall be per the Utah Department of Environmental Quality (DEQ) Division of Air Quality (DAQ) guidance document, *How to Handle Non-friable Asbestos Cement Pipe, A Guide for Meeting Utah Department of Environmental Quality/Division of Air Quality Rule*s ("Guidance").

350.020. Sub-surface Pipe Installation.

A. General. Pipes, conduits or casings, 4 inches in diameter or less, may be bored, jacked, augured or jetted under sidewalk, curb, gutter if authorized by the City Engineer or his/her designee. The resulting hole diameter shall not exceed 1 inch plus the outside diameter of the pipe or sleeve installed.

B. Boring or Jacking. Boring or jacking work shall meet the requirements and specifications of APWA 33 05 23 (Trenchless Utility Installation).

C. Tunneling. Where sidewalk, curb, and gutter exists, excavation may be made by tunneling provided the following requirements are met:

1. Excavation shall be vertical and as near to the curb or sidewalk as possible;
2. The length of the tunnel shall not exceed the width of the sidewalk, curb, and gutter;
3. Where a separate sidewalk and curb exist, an excavation shall be made between the sidewalk and the curb;
4. At least three feet of undisturbed earth shall be left under the sidewalk or curb; and
5. Where the sidewalk has been tunneled, the hole shall be filled from each end with flowable fill. Where the excavation cannot meet these requirements, a section of sidewalk, curb, or gutter, from joint to joint shall be removed and replaced.

350.030. Sub-grade.

A. Preparation. All sub-grade shall be shaped and compacted in reasonably close conformity with lines, grades and typical cross section as established by the City Engineer or his/her designee. All grading shall be based on an engineered survey, accepted by Alpine City.

In trenches and cut or fill areas the subgrade shall be scarified to a depth of 8 inches and compacted according to the compaction standards of this chapter. No rocks larger than 4 inches in diameter, organic material, soft clay, spongy material, or other deleterious material will be permitted in this scarified sub-grade layer.

B. Soft and Yielding Areas. Soft and yielding areas which do not compact to City standards shall be removed and replaced with enough compacted engineered fill to bridge the area. Trenches excavated within 10 feet of the lip of gutter shall be removed and replaced as part of the trench asphalt pavement repair, or otherwise approved by the City Engineer.

C. Trenches. When the sub-grade material does not afford a sufficiently solid foundation to support the pipe and superimposed load, the trench shall be over-excavated to a sufficient depth and backfilled with enough compacted fill as approved by the City to bridge the area.

D. Roads. Road sub-grades shall be shaped and graded to within a tolerance of 0.15 feet of design grade. Drainage shall be maintained at all times.

E. Structures. Sub-grade material for all concrete structures, regardless of type or location, shall be firm, dense, thoroughly compacted and consolidated; shall be free from mud and muck; and shall be sufficiently stable to remain firm and intact under the feet of the workmen engaged in sub-grade surfacing, laying reinforcing steel, and depositing concrete.

Coarse gravel or crushed stone may be used for subsoil reinforcement if results are satisfactory to the City Engineer or his/her designee. Such material shall be applied in layers, not exceeding 6 inches in thickness, each layer being embedded in the sub-soil by thorough tamping. All excess soil shall be removed to

compensate for the displacement of the gravel or crushed stone and the finished elevation of any subsoil reinforced in this manner and shall not be above the specified sub-grade.

The City Engineer may require a soil analysis and design for any area.

350.040. Fill Material.

A. General. All fill material shall be placed on sub-grade prepared according to the specifications of this chapter. All fill material shall be compacted according to the specifications of this chapter.

Only engineered fill or untreated base course may be used as fill material under and within a foot of streets, future street areas, driveways, and concrete unless otherwise specified. All fill material under and within a foot of electrical and communications boxes shall be untreated base course. In other areas native excavated material may normally be used unless such material cannot be properly compacted according to specifications in this chapter. All fill material, including native fill material, must be free from debris, organic material, and rocks larger than 4 inches in diameter and have a liquid limit not to exceed 35 and plastic limit not to exceed 15.

B. Bedding Material. Use APWA No. 4 sewer rock for gravity pipe bedding material. Use sand as a bedding material for pressure pipe and electrical and communication conduit. Bedding sand must compact sufficiently to support the pipe and shall meet the following gradation:

SAND GRADATION

Sieve/Screen Size	% Passing
No. 4	100
No. 200	10 to 20

C. Engineered Fill. Engineered fill shall be used for all imported material unless otherwise specified. Engineered fill shall be granular and well graded meeting the following gradation:

ENGINEERED FILL GRADATION

Sieve/Screen Size	% Passing
4"	100
¾"	70 to 100
No. 200	0 to 15

On that portion of the aggregate passing the No. 40 sieve, the liquid limit shall not exceed 30, nor shall the plasticity index exceed 15 when tested in accordance with AASHTO T89 and T90. Imported material under city streets shall have a minimum CBR of 25.

Reclaimed asphalt pavement (RAP) may NOT be used as engineered fill.

D. Untreated Base Course. All untreated base course shall meet the requirements and specifications of APWA 32 11 23 (Crushed Aggregate Base) Grade 3/4 for untreated base course. The use of slag as an untreated base course shall not be permitted.

E. Cement Treated Fill. Cement treated fill shall meet the requirements and specifications of APWA 31 05 15 (Cement Treated Fill). Cement treated fill includes following fill materials:
   1. Controlled low-strength material (CLSM) (flowable fill),
   2. Lime treated fill,
   3. Asphalt treated fill.

F. Defective Fill. Fill not conforming to the requirements of this specification shall be reworked to the requirements or removed and replaced with acceptable fill.

350.050. Slopes, Embankments, Fills and Open Channels.

A. Preparation. Unsuitable materials that occur in the foundation for slopes, embankments, and fills shall be removed by clearing, stripping, and/or grubbing. Where suitable materials occur, after stripping, the foundation shall be scarified to a depth of not less than 8 inches. All materials in slopes, embankments, and fills, including the scarified foundation layer, shall be placed, moistened, and compacted according to the compaction standards in this chapter.

B. Material. When the slope, embankment, or fill exceeds the amount of excavation, sufficient additional material shall be obtained from borrow pits provided by the Contractor. All material proposed to be imported shall be subject to the review and approval of the City Engineer or his/her designee prior any hauling operations.

The materials used for slope, embankment and fill construction shall be free from sod, grass, trash, rocks larger than 6 inches in diameter and all other material unsuitable for construction of compacted fills.

C. Grading. Grading of completed slope, embankment, or fill shall bring the surfaces to a smooth, uniform condition with final grades being within 0.1 foot of the design grade. All grading shall be done to an engineered red-head.

D. Slope Safety. All slope construction shall be in accordance with all City, State and Federal regulations. Plans and Specifications for structures must be approved by the City if the excavation is greater than five (5) feet. Cut slopes greater than 3:1 may be allowed per geotechnical report recommendation and approval of the City Engineer. Under no circumstance will a permanent slope steeper than 2:1 be allowed without a retaining structure unless otherwise approved in writing by the City Engineer or his/her designee. The width of the excavation shall be increased if necessary to provide space for sheeting, bracing, shoring and/or other supporting installations. Unsafe slopes will be the cause for immediate shutdown of the project.

E. Erosion and Sedimentation Control. Erosion and sedimentation control shall meet the requirements and specifications of APWA 31 25 00 (Erosion and Sedimentation Control).

F. Gabions. Gabions shall meet the requirements and specifications of APWA 31 36 00 (Gabions)

G. Rip Rap and Rock Lining. Rip rap and rock lining work shall meet the requirements and specifications of APWA 31 37 00 (Riprap or Rock Lining).

350.060. Installation and Compaction of Earth Materials.

A. General. The installation of all fill material shall meet the requirements and specifications of APWA 33 05 20 (Backfilling Trenches), APWA 31 23 23 (Backfilling Structures), APWA 32 05 10 (Backfilling Roadways) and APWA 31 23 26 (Compaction). Fill material outside of pavement areas, as defined by APWA 32 05 10 (Backfilling Roadways), and more than 24 inches from any utility box shall be compacted to not less than 90% of the maximum dry density.

B. Streets. Sub-base and road-base shall be graded to an engineered red head. Loose rock, roots, brush, and other materials that may be encountered in shaping the sub-base must be removed.

C. Soft and Yielding Spots. Any soft and yielding spots in the fill or sub-grade which do not compact to the specified density shall be removed and replaced with Engineered Fill installed and compacted to City standards.

D. Backfill in Trenches. Backfill shall be carefully placed around and over pipes and shall not be permitted to fall directly on a pipe from such a height or in such a manner as to cause damage.

E. Pipe Zone. The pipe zone includes the full width of trench from 3 inches below the pipe to 6 inches above the pipe for all pipes except for large reinforced concrete pipe (RCP). Large RCP includes RCP with internal diameters larger than 24 inches. The pipe zone for large RCP shall include the full width of trench from 6 inches below the pipe to 6 inches above the pipe. The pipe zone shall extend horizontally a minimum of 6 inches from either side of the pipe except for electrical and communication conduit. Electrical and communication conduit may be placed against the sides of trenches. Trenches shall be wide enough to compact fill material according to the specifications in this chapter.

The pipe zone for all pipes shall be filled with compacted bedding material. Pipe zone materials shall be placed and compacted under and around the pipe in horizontal layers not to exceed 8 inches and tamped by hand or pneumatic tampers.

350.070. Geotextiles, Geogrids and Geocomposites.

A. General. All geotextile work shall meet the requirements and specifications of APWA 31 05 19 (Geotextiles). Geogrid and geocomposite work shall meet the requirements and specifications of APWA 31 05 21 (Geogrids/Geocomposites). Geotextile, geogrid and geocomposite work includes but is not limited to the following geotextile applications:

1. Stabilization-separation,
2. Silt fence,
3. Erosion control,
4. Roadway pavements,
5. Drainage,
6. Weed barrier
7. Granular base reinforcement,
8. Asphalt concrete reinforcement, and
9. Soil reinforcement.

Section 400. Drinking Water.

SECTION INDEX

400.010. General.
A. Specifications.
B. Pipe.
C. Size.
D. Location.
E. Unusual Piping and Plumbing.
F. Dead Ends.
G. Drains.
H. Surface Water Crossings.

400.020. Installation.
A. General.
B. Pipe Cleanliness.
C. Identification Tape.
D. Lateral Displacement.
E. Restraining.
F. Connections to Existing Drinking Water Lines.
G. Bedding.

400.030. Pipe and Fittings.
A. Polyvinyl Chloride Pipe (PVC).
B. Ductile Iron Pipe.
C. Polyethylene Pipe.
D. Steel Pipe - Lined and Coated.
E. Copper Tubing.
F. Fittings.

400.040. Valves and Couplings.
A. General.
B. Resilient Seated Gate Valve.
C. Butterfly Valve.
D. Valve Boxes.
E. Couplings.
F. Pressure Regulation Valves.
G. Tapping Valves.
H. Air Vacuum and Release Valves.
I. Isolation Valves.
J. Backflow Devices.

400.050. Fire Hydrants.
A. General.
B. Placement and Location.

400.060. Meters and Services.
A. General.
B. Placement and Location.
C. Meters.

400.070. Flushing.
A. General.
B. Velocity.

400.080. Disinfection of Drinking Water Lines.
A. Cleaning.
B. Methods.

400.010. General.

A. Specifications. These specifications cover the installation of drinking water lines. See Section 200 for improvement and design requirements, Section 250 for inspection and testing requirements, and Section 350 for earthwork and trench requirements. See standard drawings related to water.

B. Pipe. PVC or polyethylene pipe shall be used for all culinary drinking water mains unless otherwise authorized by the City Engineer or his/her designee. Polyethylene pipe shall be used for the service lateral in conjuction with PVC main lines. Where ductile main line exists, copper pipe is to be used for the service lateral. Special precautions shall be taken in areas of contamination. Pipe and joint materials which are not susceptible to contamination, such as permeation by organic compounds, shall be used. Non-permeable materials shall be used for all portions of the sytem including water mains, sercice connections, and hydrant leads. The Division of Drinking Water shall be contacted to establish specific design requirements in areas of contamination or potential contamination such as sewer treatment plants, septic systems, or industrial sites.

C. Size. The City Engineer or his/her designee must approve the sizes of all proposed drinking water lines. It is required to have the design hydraulically modeled by the City's designated Hydraulic Engineer, the Hydraulic Engineer must confirm that the design meets Utah Division of Drinking Water Standards. The minimum size of drinking water pipe is 8 inch diameter for main lines and 1 inch diameter for services unless otherwise authorized by the City Engineer or his/her designee.

D. Location. Drinking water mains shall be located on either the north or east sides of a street 4 feet from the edge of curb. All drinking water appurtenances shall conform to the minimum separation standards from sanitary sewer systems as outlined in Utah Code R309-550-7 and R309-550-12. See standard drawings for utility locations.

E. Unusual Piping and Plumbing. Special and unusual piping and plumbing for equipment or structures are treated as separate items and are not included in these standards. They shall be approved by the City Engineer or his/her designee.

F. Dead Ends. To provide increased reliability of service and reduce head loss, dead ends shall be minimized by making appropriate tie-ins whenever practical. Where dead-end mains occur, they shall be provided with a fire hyardant or with an approved flushing hydrant or blow-off for flushing purposes. See section 400.070 for flushing specifications.

G. Drains. No drain within the culinary water system or other such appurtenances to the distribution system can be connected to the sanitary sewer or storm drain system. Where drains cannot be drained to daylight, underground gravel-filled absorption pits may be used if the site is not subject to flooding and conditions will assure adequate drainage. Sump pumps may also be considered if a drain to daylight or absorption pit is not feasible.

H. Surface Water Crossings. Surface water crossings, whether over or under water, require Division of Drinking Water approval and shall conform to Utah Code R309-550-8 (8).

400.020. Installation.

A. General. Drinking water distribution and transmission systems shall be installed according to the Utah State-adopted plumbing code as well as the requirements and specifications of APWA 33 11 00, 33 05 05, 33 05 06, 33 05 07, AWWA M23; 2003, and AWWA M55; 2006. (Water Distribution and Transmission).

B. Pipe Cleanliness. All foreign matter or dirt shall be removed from the inside of the pipe before it is placed and it shall be kept clean during and after laying. No debris, tools, or other materials shall be placed in the pipe during laying operations. When laying of pipe is not in progress, the pipe shall be closed by a water-tight plug.

C. Identification Tape. All drinking water mains shall be installed with identification tape that meets the requirements and specifications of APWA 33 05 20 (Backfilling Trenches). Tape shall be buried 12 inches above the pipe.

D. Lateral Displacement. All pipes shall be protected from lateral displacement resulting from impact or unbalanced loading during backfilling operations.

E. Restraining. Either thrust blocks or mechanical restraining devices shall be used for all tees, valves, plugs, caps and bends. Restraining shall be accomplished according to the most recent APWA standards.

F. Connections to Existing Drinking Water Lines. The Contractor will be responsible to verify actual size, type of material and location of existing utilities in the field. The fittings and materials required for construction must be approved by the City Engineer or his/her designee.

Where fitting sizes, such as tees and crosses, are shown on the plans, those sizes will be used. However, no attempt has been made to show all needed fittings or materials.

Tapping tees may only be installed when authorized by the City Engineer or his/her designee and when the existing main is at least one size larger than the proposed intersecting line.

G. Bedding. A continuous and uniform bedding shall be provided in the trench for all buried pipe. Stones larger than 3/4" for plastic pipe or 2-inch minus for ductile iron pipe shall be removed for a depth of at least 6 inches below the bottom of the pipe. Bedding materials shall otherwise be installed per APWA standards

400.030. Pipe and Fittings.

A. Polyvinyl Chloride Pipe (PVC). PVC pipe shall meet the standards and specifications of APWA 33 05 07 (Polyvinyl Chloride Pipe), AWWA C900 and C905. Only blue or white, SDR-18 pressure class 150 psi PVC pipe may be used for drinking water mains.

B. Ductile Iron Pipe. Ductile iron pipe shall meet the standards and specifications of APWA 33 05 05 (Ductile Iron Pipe). Only a pressure class of 150 psi or larger may be used. A tubular black polyethylene encasement must be installed according to AWWA C105 over all ductile iron pipe and fittings. Flanges, when required, shall meet the requirements and specifications of AWWA C115.

C. Polyethylene Pipe. Polyethylene pipe shall meet the standards and specifications of APWA 33 05 06 (Polyethylene Pipe) and AWWA C906 which includes NSF-61 certification.

D. Steel Pipe - Lined and Coated. Steel pipe shall meet the standards and specifications of APWA 33 05 09 (Steel Pipe - Lined and Coated).

E. Copper Tubing. Copper tubing shall be "soft annealed" and shall conform to the standards for "Type K," prescribed in ANSI/AWWA C800-89 Section A.2 for "Copper Water Tubing" and to ASTM, designation B42 and B88-99, and current revisions thereof. It shall be free from grooving cracks, indentations, flaws or other defects. At intervals of not greater than one and one-half feet, the tubing shall bear clear, permanent markings indicating the type and manufacturer.

F. Fittings. Use Ductile Iron fittings that conform to the provisions of ANSI/AWWA C110/A21.10 or C153/A21.53 unless otherwise recommended by the manufacturer and authorized by the City Engineer or his/her designee. All PVC pipe being inserted into fittings shall have the bevel end removed. All the bolts and nuts of all fittings shall be greased. All fittings shall have an 8 mil vinyl wrap plastic cover.

Minimum pressure Class will be 250 for pipes larger than 12 inch diameter. Pipes of 12 inch diameter and smaller shall be pressure Class 350.

FLOW REQUIREMENTS FOR FLUSHING

Pipe Diameter	Flow in Gallons Per Minute
4 inch	100
6 inch	220
8 inch	390
10 inch	610
12 inch	880
16 inch	1,567
18 inch	1,980
20 inch	2,450
24 inch	3,525

30 inch	5,507

400.040. Valves and Couplings.

A. General. All valves shall meet the requirements of APWA 33 11 00 (Water Distribution and Transmission) and APWA 33 12 16 (Water Valves).

B. Resilient Seated Gate Valve. All valves on 4 inch to 12 inch drinking water mains shall be resilient seated gate valves. Valves shall also be of iron body have non-rising bronze stems and meet the following specifications:
   1. Mechanical Joint. When valves are Mechanical Joint, they shall be furnished with all necessary glands, followers, and bolts and nuts to complete installation.
   2. Valve Stems. Bronze valve stems shall be interchangeable with stems of the double disc valves of the same size, direction of opening and manufacture.

C. Butterfly Valve. All valves 14 inches and larger shall be butterfly valves which meet the requirements and specifications of APWA 33 11 00 (Water Distribution and Transmission) and APWA 33 12 16 (Water Valves) and the following specifications:
   1. General. Valve bodies shall be cast iron, ASTM A-126 Class B. Body ends shall be flanged with facing and drilling in accordance with ANSI B16.1, Class 125; or mechanical joint in accordance with AWWA C111. All mechanical joint end valves shall be furnished complete with joint accessories (bolts, nuts, gaskets, and glands). All valves shall conform to AWWA Standard C-504, Table 3, Laying Lengths for Flanged Valves and Minimum Body Shell Thickness for all Body Types.
   2. Disc. Valve disc shall be ductile iron ASTM A-536, grade 65-45-12. Valve disc shall be of the offset design providing 360 degree uninterrupted seating.
   3. Shaft Bearings. Shaft bearings shall be contained in the integral hubs of the valve body and shall be self-lubricated sleeve type.
   4. Coating. All valves shall be coated with epoxy in conformance to AWWA Standard C-550, latest revision. Interior wetted ferrous surfaces shall be coated a nominal 10 mils thick for long life; and body exterior shall have a minimum of 3 to 4 mils coating thickness in order to provide superior base for field-applied finish coats.

D. Valve Boxes. Valves shall be bolted to the cross in the intersection of streets as a cluster valve set. Earth fill shall be carefully tamped around the valve box to a distance of 4 feet on all sides of the box, or to the undisturbed trench face if less than 4 feet.

   All top of valve boxes located in streets shall be installed 1/2 inch below grade. When an overlay is required, the pavement surrounding the valve box shall be neatly cut to form a 30 inch round opening with the valve box centered, and a concrete collar shall be cast around the box 1/2 inch below grade and the valve box set 1/2 inch below grade. Valve boxes in off-road areas shall extend 6 inches above grade. Lid detail shall be similar to Comco C-6517.

E. Couplings. Couplings shall be equal to the product of Smith-Blair or Dresser with cast iron couplings being used on all cast iron and PVC pipe. Couplings shall be of the straight, transition, or reducing style as required by the specific installation. All steel fittings and bolts shall be coated with a non-oxide coating and wrapped with polyethylene.

F. Pressure Regulation Valves. Pressure regulation valves (PRV) which are required in a development when static pressures exceed 150 psi and shall be designed by the Developers engineer, the design shall be submitted to the City Engineer or his/her designee for review and approval prior to starting construction. All PRV's shall be Cla-Val with a 4" bypass or approved by the City Engineer, be placed in a concrete vault, have isolation valves on each side, and have telemetry included.

G. Tapping Valves. Tapping valves may only be used when approved by the City Engineer or his/her designee. Tapping saddles with an "O" ring may be used if the drinking water main line to be tapped is larger than the new drinking water main line. Where the tap is the same size as the existing main, cast iron or stainless steel tapping sleeves shall be used, which encase the full perimeter of the pipe. The valve shall be a tapping valve with a guide lip on the flanged side. The opposite side of the valve shall have a mechanical joint connection.

H. Air, Vacuum and Release Valves. Combination air, vacuum and release valves shall be installed according to the standard drawings at high points in the system as required by the City Engineer or his/her designee.

I. Isolation Valves. A sufficient number of valves shall be provided on water mains so that inconvenience and sanitary hazards will be minimized during repairs. Valves shall be located at every roadway intersection or block on all segments of pipe. Where a proposed system may serve widely scattered customers and where future development is not expected, the valve spacing shall not exceed two thousand (2,000) feet.

J. Backflow Assemblies. Installation of backflow assembly shall conform to City ordinances and the State-adopted plumbing code. Alpine City has strict guidelines regarding cross connections. In the event a cross connection is allowed, a reduced pressure zone (RPZ) backflow assembly is the only allowed style of backflow prevention assembly. A RPZ may be required in other circumstances, each situation will be evaluated on an individual basis.

400.050. Fire Hydrants.

A. General. Fire hydrants shall meet the requirements and specifications of APWA 33 12 19 (Hydrants). All fire hydrants shall be Mueller Super Centurion 250 or approved equivalent and red in color. They shall have a 5 ¼ inch barrel diameter and 6-inch mechanical joint connection. The 6-inch gate valve will be mechanical joint by flange connected to the tee joint at the main line in the street. Hydrants shall be frost proof. The threads shall be National Standard Fire Hose Thread. Spacing of fire hydrants shall be according to the Uniform Fire Code but more specifically, hydrants are required to be located within 250' of any structure, typically located on property lines. The fire flow level of service Alpine City has established is 1,750 gpm for 2 hours at every hydrant, this will be verified when the proposed plan is submitted and reviewed by the City's designated Hydraulic Engineer.

B. Placement and Location. In general, fire hydrants should be located on property lines to minimize conflicts with driveways. Fire hydrant location to be approved by the City Engineer or his/her designee. Fire hydrants shall be set vertical and held in place by adequate concrete blocking which shall be left in the trench. Hydrants shall be set at a height that will allow 2 inches minimum and 7 inches maximum exposed between the finished ground and the sidewalk flange. A gravel filled drip area shall be provided. Hydrant drains shall not be connected to or located within 10 feet of sanitary sewers. Where possible hydrant drain shall not be located within 10 feet of storm drains. See standard drawing for fire hydrants.

The relocation of fire hydrants shall meet the requirements and specifications of APWA 33 11 11 (Relocate Water Meters and Fire Hydrants) and related sections.

400.060. Meters and Services.

A. General. Alpine City owns and maintains the water system up to and including the water meter. Between the water meter and home is the responsibility of the homeowner. See Standard Drawings for drinking water services. The minimum size of new drinking water service lines is 1 inch, while the standard meter size is 3/4 -inch. All drinking water services shall have dual check valves. Drinking water services shall extend 20 feet beyond the back of curb and shall be capped until connected to a building. Meter and service line installation shall conform to the State-adopted plumbing code and conform to the standard meter installation detail as noted in the Alpine City Standard Details.

B. Placement and Location. All meter boxes shall have their location and grade staked prior to installation. No meter boxes shall be set in sidewalks, driveways, or encased in concrete in any way. Service taps shall be a minimum of 36 inches apart. No taps will be allowed within 36 inches of the end of the pipe.

Service laterals shall extend perpendicular from the main to the meter box. If a meter must be coordination with the City Engineer is required. When a new service line is installed the old corporation stop shall be shut off at the main and the old service line cut two feet from the main.

Drinking water service lines shall meet the separation from sanitary sewer requirements in this Section. Drinking water services shall extend 20 feet beyond the back of curb and capped until connected to a building.

The relocations of drinking water meters shall meet the requirements and specifications of APWA 33 11 11 (Relocate Water Meters and Fire Hydrants) and related sec tions. Services 3/4 – 2 inch shall be copper tubing shall be "soft annealed" and shall conform to the standards for "Type K," prescribed in ANSI/AWWA C800-89 Section A.2 for "Copper Water Tubing" and to ASTM, designation B42 and B88-99, and current revisions thereof. Pipe damaged by scratches, cuts, kinks, or buckled areas shall not be installed. PVC, as mentioned in section 400.010 (B) shall be used in conjuction with PVC mains where corrosive soils exist and shall conform to the requirements and specifications of APWA 33 05 06 (Polyethylene Pipe), only CTS SDR9 200 psi blue polyethylene pipe shall be used for service lines. Deflection in joints shall meet

manufacturer's specifications and shall be approved by the City Engineer or his/her designee or shall be replaced with the proper fitting.

C. Meters. The standard meter size is 3/4-inch. All meters shall be paid for by the Contractor and supplied by the City. Meter boxes shall be in good repair. They shall not be set at an angle, crushed, or dented. The inside of boxes must be free from obstructions such as dirt, rocks or debris.

400.070. Flushing.

A. General. All drinking water lines shall be flushed after the high chlorine test and prior to the pressure test. See Section 250. Testing and Inspection for testing information. Flushing shall be accomplished through hydrants and at the end each line. No flushing device shall be directly connected to a sewer or storm drain.

B. Velocity. The Contractor shall install a tap sufficient in size to provide for 2½ foot per second flushing velocity in the line. The following is the flow quantity required to provide a 2½ foot per second flushing velocity.

FLOW REQUIREMENTS FOR FLUSHING

Pipe Diameter in Inches	Flow in Gallons per Minute
4 inch	100
6 inch	220
8 inch	390
10 inch	610
12 inch	880
16 inch	1,567
18 inch	1,980
20 inch	2,450
24 inch	3,525
30 inch	5,507

400.080. Disinfection of Drinking Water Lines.

A. Cleaning. The pipe shall be clean prior to disinfection. If in the opinion of the City, contamination is such that it cannot be removed by flushing, the pipe shall be cleaned by mechanical means and then swabbed with a 1% hypochlorite disinfection solution.

B. Methods. All drinking water pipeline shall be disinfected as outlined in AWWA C651 by one of the following methods:

1. *Tablet Method.* The tablet method shall consist of placing calcium hypochlorite tablets at the specified rate in the main during construction at the upstream end of each section of pipe. The tablet shall be attached with an adhesive, such as Permatex No. 1 or equivalent as approved by the City Engineer or his/her designee. The line shall then be filled slowly (velocities less than 1 ft/sec), expelling all air pockets and maintaining the disinfection solution in the line for at least 24 hours, 48 hours if the water temperature is less than 41º F. The disinfection solution shall have a concentration of at least 25 mg/l of available chlorine.
2. *Continuous Feed Method.* The continuous feed shall be done exactly as outlined in AWWA C651 and shall have a twenty-five mg/l available Chlorine after 24 hours.

Under both methods the Contractor shall not be allowed to flush the line until the chlorine residual test has been passed by the City. If necessary drinking water lines shall be re-chlorinated until satisfactory bacteriological testing is obtained. See Section 250. Testing and Inspection for testing information.

Section 450. Pressurized Irrigation.

SECTION INDEX

450.010. General.
A. Specifications.
B. Pipe.
C. Size.
D. Location.
E. Unusual Piping and Plumbing.

450.020. Installation.
A. General.
B. Pipe Cleanliness.
C. Minimum Cover.
D. Identification Tape.
E. Lateral Displacement.
F. Restraining.
G. Connections to Existing Pressurized Irrigation Lines.

450.030. Pipe and Fittings.
A. Polyvinyl Chloride Pipe (PVC).
B. Ductile Iron Pipe.
C. Polyethylene Pipe.
D. Steel Pipe - Lined and Coated.
E. Fittings.

450.040. Valves and Couplings.
A. General.
B. Resilient Seated Gate Valve.
C. Butterfly Valve.
D. Valve Boxes.
E. Couplings.
F. Pressure Regulation Valves.
G. Tapping Valves.
H. Air, Vacuum and Release Valves.

450.050. Meters, Boxes and Services.
A. General.
B. Placement and Location.
C. Meters and Boxes.
D. Polyethylene Pipe.

450.060. Flushing.
A. General.
B. Velocity.

450.010. General.

A. Specifications. These specifications cover the installation of pressurized irrigation lines. See Section 200 for improvement and design requirements, Section 250 for inspection and testing requirements, and Section 350 for earthwork and trench requirements. See standard drawings related to pressurized irrigation.

B. Pipe. Polyvinyl Chloride (PVC) pipe shall be used for all pressurized irrigation mains 12 inches in diameter and smaller unless otherwise authorized by the City Engineer or his/her designee. Ductile iron, PVC, or polyethylene pipe shall be used for pressurized irrigation mains larger than 12 inches in diameter as approved by the City Engineer or his/her designee. Only PVC or polyethylene pipe may be used in corrosive soils.

C. Size. The City Engineer or his/her designee must approve the sizes of all proposed pressurized irrigation lines. The minimum size of pressurized irrigation pipe in thru streets is 6 inch diameter for main lines, 4 inch diameter for cul-de-sacs unless otherwise specified in the Pressurized Irrigation System Master Plan. 1 inch diameter for services are required for each lot. A dual service shall be 1½" to the service tee.

D. Location. Pressurized irrigation mains shall be located on either the south or west sides of a street 3 feet from the edge of curb. See standard drawings for utility locations.

E. Unusual Piping and Plumbing. Special and unusual piping and plumbing for equipment or structures are treated as separate items and are not included in these standards.

Tapping tees may only be installed when authorized by the City Engineer or his/her designee and when the existing main is at least one size smaller than the proposed main.

450.020. Installation.

A. General. Pressurized irrigation distribution and transmission systems shall be installed according to the requirements and specifications of APWA 33 11 00 (Water Distribution and Transmission). PVC pipe shall also be installed according to the requirements and specifications of AWWA C605.

B. Pipe Cleanliness. All foreign matter or dirt shall be removed from the inside of the pipe before it is placed and it shall be kept clean during and after laying. No debris, tools, or other materials shall be placed in the pipe during laying operations. When laying of pipe is not in progress, the pipe shall be closed by a water-tight plug.

C. Minimum Cover. All pressurized irrigation mains shall have a minimum cover of 2 feet to the top of the pipe.

D. Identification Tape. All pressurized irrigation mains shall be installed with identification tape that meets the requirements and specifications of APWA 33 05 20 (Backfilling Trenches). Tape shall be buried 12 inches above the pipe.

E. Lateral Displacement. All pipes shall be protected from lateral displacement resulting from impact or unbalanced loading during backfilling operations.

F. Restraining. Either thrust blocks or mechanical restraining devices shall be used for all tees, valves, plugs, caps and bends. Restraining shall be accomplished according to the standard drawings.

G. Connections to Existing Pressurized Irrigation Lines. The Contractor will be responsible to verify actual size, type of material and location of existing utilities in the field. The fittings and materials required for construction must be approved by the City Engineer or his/her designee.

Where fitting sizes, such as tees and crosses, are shown on the plans, those sizes will be used. However, no attempt has been made to show all needed fittings or materials.

450.030. Pipe and Fittings.

A. Polyvinyl Chloride Pipe (PVC). PVC pipe shall meet the requirements and specifications of APWA 33 05 07 (Polyvinyl Chloride Pipe) and AWWA C900 and C905. Only purple, SDR-18 pressure class 150 psi pipe may be used for pressurized irrigation mains.

B. Ductile Iron Pipe. Ductile iron pipe shall meet the standards and specifications of APWA 33 05 05 (Ductile Iron Pipe). Only a pressure class of 150 psi or larger may be used. A tubular purple polyethylene encasement must be installed according to AWWA C105 over all ductile iron pipe and fittings. Flanges,

when required, shall meet the requirements and specifications of AWWA C115. Ductile iron may be directed tapped for the use of corporation stops.

C. Polyethylene Pipe. Polyethylene pipe shall meet the standards and specifications of APWA 33 05 06 (Polyethylene Pipe).

D. Steel Pipe - Lined and Coated. Steel pipe shall meet the standards and specifications of APWA 33 05 09 (Steel Pipe - Lined and Coated).

E. Fittings. Use Ductile Iron fittings that conform to the provisions of ANSI/AWWA C110/A21.10 or C153/A21.53 unless otherwise recommended by the manufacturer and authorized by the City Engineer or his/her designee. All PVC pipe being inserted into fittings shall have the bevel end removed. All the bolts and nuts of all fittings shall be greased. All fittings shall have an 8 mil vinyl wrap plastic cover.

450.040. Valves and Couplings.

A. General. All valves shall meet the requirements of APWA 33 11 00 (Water Distribution and Transmission) and APWA 33 12 16 (Water Valves).

B. Resilient Seated Gate Valve. All valves on 4 inch to 12 inch water mains shall be resilient seated gate valves. Valves shall also be of iron body have non-rising bronze stems and meet the following specifications:

1. *Mechanical Joint.* When valves are Mechanical Joint, they shall be furnished with all necessary glands, followers, and bolts and nuts to complete installation.
2. *Valve Stems.* Bronze valve stems shall be interchangeable with stems of the double disc valves of the same size, direction of opening and manufacture.

C. Butterfly Valve. All valves 14 inches and larger shall be butterfly valves which meet the requirements and specifications of APWA 33 11 00 (Water Distribution and Transmission) and APWA 33 12 16 (Water Valves) and the following specifications:

1. *General.* Valve bodies shall be cast iron, ASTM A-126 Class B. Body ends shall be flanged with facing and drilling in accordance with ANSI B16.1, Class 125; or mechanical joint in accordance with AWWA C111. All mechanical joint end valves shall be furnished complete with joint accessories (bolts, nuts, gaskets, and glands). All valves shall conform to AWWA Standard C-504, Table 3, Laying Lengths for Flanged Valves and Minimum Body Shell Thickness for all Body Types.
2. *Disc.* Valve disc shall be ductile iron ASTM A-536, grade 65-45-12. Valve disc shall be of the offset design providing 360 degree uninterrupted seating.
3. *Shaft Bearings.* Shaft bearings shall be contained in the integral hubs of the valve body and shall be self-lubricated sleeve type.
4. *Coating.* All valves shall be coated with epoxy in conformance to AWWA Standard C-550, latest revision. Interior wetted ferrous surfaces shall be coated a nominal 10 mils thick for long life; and body exterior shall have a minimum of 3 to 4 mils coating thickness in order to provide superior base for field-applied finish coats.

D. Valve Boxes. All buried valves shall be installed complete with two-piece, cast iron, slip type, 5-1/4-inch shaft valve box with drop lid. The lid shall have the word "IRRIGATION" or “DRAIN” according to the standard drawing cast in the metal.

Valves and valve boxes shall be installed where shown on the drawings. Valves and valve boxes shall be set plumb. Valve boxes shall be centered directly over the valve. Valves shall be aligned with property lines where possible. Earth fill shall be carefully tamped around the valve box to a distance of 4 feet on all sides of the box, or to the undisturbed trench face if less than 4 feet. Valves shall have the interiors cleaned of all foreign matter before installation.

All top of valve boxes located in streets shall be installed 1/2 inch below grade. The pavement surrounding the valve box shall be neatly cut to form a 30 inch round opening with the valve box centered, and a concrete collar shall be cast around the box. Valve boxes in off-road areas shall extend 6 inches above grade unless otherwise specified by the City Engineer or his/her desginee. Lid detail shall be similar to Comco C-6517.

E. Couplings. Couplings shall be equal to the product of Smith-Blair or Dresser with cast iron couplings being used on all cast iron and PVC pipe. Couplings shall be of the straight, transition, or reducing style as

required by the specific installation. All steel fittings and bolts shall be coated with a non-oxide coating and wrapped with polyethylene.

F. Pressure Regulation Valves. Pressure regulation valves (PRV) which are required in a development shall be designed by the Developers engineer and the design shall be submitted to the City Engineer or his/her designee for review and approval prior to starting construction. All PRV's shall be Cla-Val with a 4" bypass or as specified by design, be placed in a concrete vault and have telemetry included.

G. Tapping Valves. Tapping valves may only be used when approved by the City Engineer or his/her designee. Tapping saddles with an "O" ring may be used if the water main line to be tapped is larger than the new water main line. Where the tap is the same size as the existing main, cast iron or stainless steel tapping sleeves shall be used, which encase the full perimeter of the pipe. The valve shall be a tapping valve with a guide lip on the flanged side. The opposite side of the valve shall have a mechanical joint connection.

H. Air, Vacuum and Release Valves. Combination air, vacuum and release valves shall be installed according to the standard drawings at high points in the system as required by the City.

450.050. Meters, Boxes and Services.

A. General. See the standard drawings for pressurized irrigation services. The minimum size of new pressurized irrigation service lines is 1 inch for single service and 1 ½" for dual service.

B. Placement and Location. All meters and boxes shall have their location and grade staked prior to installation. No meters or boxes shall be set in sidewalks or driveways. Meters and boxes are to be set 5 feet uphill from the water meter, 1 foot behind the sidewalk or 10 feet behind the curb. Service taps shall be a minimum of 36 inches apart. No taps will be allowed within 36 inches of the end of the pipe.

Service laterals shall extend perpendicular from the main to the meter or box. For dual pressurized irrigation services, laterals shall extend perpendicular from the main to the tee.

If a meter must be moved coordination with the City Engineer is required. When a new service line is installed the old corporation stop shall be shut off at the main and the old service line cut two feet from the main.

C. Meters and Boxes. All meters shall be paid for by the developer and ordered by the City. Meter boxes and pressurized irrigation boxes shall be in good repair. They shall not be set at an angle, crushed, or dented. The inside of boxes must be free from obstructions such as dirt, rocks or debris. Meters shall be installed by the Developer or Contractor.

D. Polyethylene Pipe. Only CTS SDR9 200 psi purple polyethylene pipe shall be used for pressurized irrigation service lines. Pipe damaged by scratches, cuts, kinks or buckled areas shall not be installed.

The bottom of trench shall be flat with no hollows, no lumps and no rock. If these conditions do not occur pipe must be bedded in coarse sand. No rocks shall be allowed within six inches of pipe.

Pipe shall be cut with either a wheel or scissor type tubing cutter with a blade specifically designed for plastic. Cuts shall be square and clean. Cutter manufacturer instructions shall be followed when cutting pipe. All connections shall have stainless steel stiffeners.

There shall be no unnecessary bending of pipe. Taps shall be exactly horizontal to the pressurized irrigation main. If bending cannot be avoided maximum bending radius shall be 25 times the pipe diameter as measured in inches (i.e.: a 16 inch pipe cannot bend on a curvature having a radius less than 16 x 25= 400 feet). There shall be no bending within 3 feet of a fixed point and no "S" shape curves.

450.060. Flushing.

A. General. All pressurized irrigation lines shall be flushed before placed in service. Flushing shall be accomplished through the end of each line.

B. Velocity. The Contractor shall install a tap sufficient in size to provide for 2 ½ feet per second flushing velocity in the line. The following is the flow quantity required to provide a 2 ½ foot per second flushing velocity.

FLOW REQUIREMENTS FOR FLUSHING

Pipe Diameter	Flow in Gallons Per Minute
4 inch	100
6 inch	220
8 inch	390
10 inch	610
12 inch	880
16 inch	1,567
18 inch	1,980
20 inch	2,450
24 inch	3,525
30 inch	5,507

Section 500. Sanitary Sewer.

SECTION INDEX

500.010. General.
- A. Specifications.
- B. Pipe.
- C. Size.
- D. Locations.
- E. Minimum Slopes.
- F. Sanitary Sewer Lift Stations.
- G. Unusual Piping and Plumbing.

500.020. Pipe and Fittings.
- A. General.
- B. Polyvinyl Chloride Pipe (PVC).
- C. ADS Sanitite HP Pipe.

500.030. Services.
- A. General.
- B. Clean-outs.

500.010. General.

A. Specifications. Sanitary sewer facilities shall meet the requirements and specifications of APWA 33 31 00 (Sanitary Sewerage Systems). These specifications cover the installation of sanitary sewer lines. See Section 200 for improvement and design requirements, Section 250 for inspection and testing requirements, and Section 350 for earthwork and trench requirements. See standard drawings related to sanitary sewers.

B. Pipe. All sanitary sewer pipe 18 inches in diameter and larger shall be ADS Sanitite HP pipe or approved equivalent unless otherwise approved by City Engineer or his/her designee. All other sanitary sewer pipe shall be constructed with polyvinyl chloride (PVC) pipe.

C. Size. The City Engineer or his/her designee must approve the sizes of all proposed sanitary sewer lines. Minimum size of pipe is 8 inch diameter for main lines and 4 inch diameter for services.

D. Location. Sanitary Sewer mains shall be located on either the south or west sides of a street 7 feet from the centerline. A maximum of 400 feet of pipe shall be allowed between manholes unless otherwise approved by the City Engineer.

E. Minimum Slopes. Slopes shall be designed to have a 2 foot per second velocity unless otherwise approved by the City Engineer. The following table lists minimum slopes for sanitary sewer for each size of pipe:

MINIMUM SANITARY SEWER SLOPES

Pipe Diameter (inches)	Minimum Slope (%)
4	2.000
6	1.000
8	0.334
10	0.248
12	0.194
14	0.158
15	0.144
16	0.132
18	0.113
21	0.092
24	0.077
27	0.066
30	0.057
36	0.045
48	0.031
54	0.027
60	0.023

F. Sanitary Sewer Lift Stations. Sanitary sewer lifts stations require prior approval. All possible options for a gravity flow system shall be considered prior to requesting approval of a sanitary sewer lift station or equivalent system. Sanitary sewer lift stations or equivalent systems which are approved to be used in a development shall be designed by the Developer's engineer; the design shall be submitted to the City Engineer or his/her designee for review prior to Preliminary Approval of the development. Lift stations will be the wet well / dry well type, will have standby power, proper ventilation, telemetry, and will be designed for large areas, not individual subdivisions.

G. Unusual Piping and Plumbing. Special and unusual piping and plumbing for equipment or structures are treated as separate items and are not included in these standards.

500.020. Pipe and Fittings.

A. General. ADS Sanitite HP pipe or approved equivalent shall be used for all sanitary sewer lines larger than 18 inches in diameter. All other sanitary sewer lines shall be constructed with polyvinyl chloride (PVC) pipe.

Pipe buried more than 12 feet deep shall require manufacturing and engineering specifications to be submitted to the City Engineer or his/her designee for written approval.

B. Polyvinyl Chloride Pipe (PVC). PVC pipe shall meet the requirements and specifications of APWA 33 05 07 (Polyvinyl Chloride Pipe) and shall have a minimum rating of SDR-35.

C. ADS Sanitite HP Pipe. Sanitite HP pipe with sizes up to 30 inches shall meet the requirements and specifications of ASTM F2732. Sanitite HP pipe with sizes over 30 inches shall meet the requirements of ASTM F2764.

500.030. Services.

A. General. All sanitary sewer services shall be connected to existing sanitary sewer mains by use of an Inline Y or approved equivalent Insert-a-Tee type connection, and shall be approved by the City Engineer. Sewer services shall extend 10 feet beyond the back of sidewalk and plugged until connected to a building. The minimum cover of sewer laterals is at 3' 6" at the property line.

B. Clean-outs. Clean-outs, per City details, shall be installed every 100 feet on all service lines.

Section 550 Storm, Land and Groundwater Drains.

SECTION INDEX

550.010. General.
- A. Specifications.
- B. Size.
- C. Location.
- D. Minimum Slopes.
- E. Unusual Piping and Plumbing.
- F. Groundwater Drains.

550.020. Pipe and Fittings.
- A. General.
- B. Concrete Pipe.
- C. Polyethylene Pipe.
- D. Polyvinyl Chloride Pipe.
- E. Corrugated Metal Pipe.

550.030. Sumps and Appurtenances.
- A. Connecting to Existing Drains Lines.
- B. Sumps.
- C. Inlet and Clean Out Structures.
- D. Headwalls.

550.040. Retention/Detention Basins.
- A. General.
- B. Retention Basins.
- C. Detention Basins.

550.050. Low Impact Development.
- A. General.

550.010. General.

A. Specifications. Storm, land and groundwater drain facilities shall meet the requirements and specifications of APWA 33 41 00 (Storm Drainage Systems). These specifications cover the installation of storm, land and groundwater lines. See Section 200 for improvement and design requirements, Section 250 for inspection and testing requirements, and Section 350 for earthwork and trench requirements. See standard drawings related to storm, land and groundwater drains. Land and groundwater drains shall be approved by the City Engineer and shall be installed lower in elevation than the sewer mainline.

B. Size. The City Engineer or his/her designee must approve the sizes of all proposed drain lines. The minimum size of pipe is 15" diameter for all lines, both mains and laterals.

C. Location. Drain lines shall be located along the centerline of the street, typically below water mains to reduce conflicts. Unless approved otherwise, a maximum of 400 feet of pipe shall be allowed between manholes.

D. Minimum Slopes. Slopes shall be designed to have a 2 foot per second velocity unless otherwise approved by the City Engineer. The following table lists minimum slopes for drain lines for each size of pipe:

MINIMUM DRAIN LINE SLOPES

Pipe Diameter (inches)	Minimum Slope (%)
12	0.194
14	0.158
15	0.144
16	0.132
18	0.113
21	0.092
24	0.077
27	0.066
30	0.057
36	0.045
48	0.031
54	0.027
60	0.023

E. Unusual Piping and Plumbing. Special and unusual piping and plumbing for equipment or structures are treated as separate items and are not included in these standards.

F. Groundwater Drains. All plans for groundwater drains must be designed and stamped by a licensed professional civil engineer in the State of Utah. Only rigid pipe may be used.

550.020. Pipe and Fittings.

A. General. Reinforced concrete pipe shall be used for all lines with less than 2 feet of cover or more than 8 feet of cover. Corrugated metal pipe (CMP) may only be used when authorized by the City Engineer or his/her designee.

B. Concrete Pipe. Concrete pipe shall meet the requirements and specifications of APWA 33 05 02 (Concrete Pipe and Culvert). Reinforced concrete pipe (RCP) shall be Class III. Only new pipe may be used unless otherwise authorized by the City Engineer or his/her designee.

C. Polyethylene Pipe. Polyethylene pipe shall meet the requirements and specifications of APWA 33 05 06 (Polyethylene Pipe) Type S for storm drains and Type SP for land or groundwater drains.

D. Polyvinyl Chloride Pipe (PVC). PVC pipe shall meet the requirements and specifications of APWA 33 05 07 (Polyvinyl Chloride Pipe).

E. Corrugated Metal Pipe (CMP). CMP shall meet the requirements and specifications of APWA 33 05 04 (Corrugated Metal Pipe).

550.030. Sumps, and Appurtenances.

A. Connecting to Existing Drain Lines. Manholes and sumps used to connect proposed storm drain to existing storm drain shall be plumb and centered on the existing storm drain. The new pipe shall be placed against the existing pipe at the elevation designated by the project engineer and the base poured as specified above. Care shall be taken not to disturb the alignment of the existing storm drain during the excavation procedure. Any damage to the existing storm drain shall be repaired.

B. Sumps. Sumps may only be constructed of reinforced concrete, precast sections and shall meet the requirements of ASTM C478-73. Sumps shall have eccentric lids to ensure adjustments in alignment.

C. Inlet and Clean Out Structures. Surface water must enter the City storm drain system through standard City inlet boxes. In no case may water inlet directly into storm manholes, clean-outs, or sumps. Inlets and clean out structures shall not exceed 400 ft spacing unless approved otherwise by the City Engineer.

All inlet and clean out structures shall be reinforced concrete boxes. They may be precast or cast-in-place. Grate and Frame Material. All castings shall be of ASTM A-48, Class 35 iron free from blowholes and shrinkage defects. Castings shall be free from fins and burrs and shall be shot-blasted to remove sand and other foreign matter. Freedom from cracks and defects shall be ascertained by the engineer prior to installation.

D. Headwalls. A headwall shall be installed at all ditch to pipe transitions. Headwall designs must be stamped by a licensed professional civil engineer in the State of Utah and approved by the City Engineer or his/her designee.

550.040. Retention/Detention Basins.

A. General. Basin designs shall be designed with the following side slopes:

Basin Finish	Min. Side Slope
Non-landscaped	3:1
Landscaped	4:1

B. Retention Basins. All retention basins shall have a freeboard of 12 inches. Design of retention basins shall be according to the Storm Water Drainage Design Manual. All retention basins shall have a series of interconnected sumps connected to curb inlet boxes or storm drain main lines.

All retention basins shall be constructed for drainage areas designated in the Storm Drain Master Plan. Basins for smaller areas may be allowed only with prior written approval of the City Engineer or his/her designee.

C. Detention Basins. All detention basins shall have 12 inches of freeboard. Design of detention basins shall be according to the Storm Water Drainage Design Manual. Detention basins may be constructed in landscape or parking areas. Each detention basin shall incorporate LID storm drain principles and have an overflow to the City storm drain system.

550.050. Low Impact Development.

General. All new development and roadways shall incorporate LID storm drain in the form of bioretention swales, underground retention cells and other methods as approved by the City Engineer or his/her designee. LID systems shall be designed in accordance with the Stormwater Design Manual.

Section 600. Streets and Pavements.

SECTION INDEX

600.010. General.
A. Street Designations.
B. Time Limitation after Curb and Gutter.
C. Geotextiles, Geogrids and Geocomposites.
D. Pavers.
E. Painted Traffic Lines and Markings.
F. Traffic Barriers.
G. Vehicle Delineators.

600.020. Street Section.
A. Soils Investigation.
B. Pavement Section.
C. Road-base Section.
D. Sub-base Section.
E. Grading.

600.030. Trail Section.
A. General.
B. Survey.
C. Weed Abatement.
D. Geotextile Fence.
E. Sub-grade.
F. Weed Barrier.
G. Limestone Crusher Fines.
H. Trail Markings.
I. Clean-up.

600.040. Bituminous Surface Course.
A. Paving Asphalts.
B. Asphalt Concrete.
C. Prime Coat.
D. Tack Coat.
E. Overlays and Patches.
F. Slurry Seal.
G. Chip Seal.
H. Micro-Surfacing.
I. Pavement Crack Seal.
J. High Density Mineral Bond Seal

600.010. General.

A. Street Designations. Street designations include: local streets, secondary access, collector streets and arterial streets. Designations shall be assigned by the City in compliance with the Alpine City Transportation Master Plan.

B. Time Limitation after Curb and Gutter is Placed. Pavement shall be placed at least 7 days after and before 45 days after the placement of curb and gutter unless an extension is granted by the City Engineer or his/her designee.

C. Geotextiles, Geogrids and Geocomposites. All geotextile work shall meet the requirements and specifications of APWA 31 05 19 (Geotextiles) and APWA 32 12 16 (Plant-Mix Asphalt Paving). Geogrid and geocomposite work shall meet the requirements and specifications of APWA 31 05 21 (Geogrids/Geoomposites) and APWA 32 12 16 (Plant-Mix Asphalt Paving).

D. Pavers. Pavers and installation shall meet the requirements and specifications of APWA 32 14 13 (Precast Concrete Unit Paving) and APWA 32 14 16 (Brick Unit Paving).

E. Painted Traffic Lines and Markings. Painted traffic lines and markings shall meet the requirements and specifications of APWA 32 17 23 (Pavement Markings) and the MUTCD.

F. Traffic Barriers. Vehicle barriers shall meet the requirements and specifications of APWA 34 71 13 (Vehicle Barriers) and the MUTCD.

G. Vehicle Delineators. Vehicle delineators shall meet the requirements and specifications of APWA 34 71 19 (Vehicle Delineators) and the MUTCD.

600.020. Street Section.

A. Soils Investigation. A soils investigation shall be performed for all new roads and those roads for which work will be performed. The results of this investigation and a design of the road cross section shall be submitted to and accepted by the City Engineer or his/her designee.

The following guidelines shall be used as a minimum requirement for street cross sections. They should be used unless the soils investigation indicates they are not adequate. Any variations from these standards must be approved by the City Engineer or his/her designee.

B. Pavement Section. All roads shall be paved with asphalt concrete according to City standards unless authorized by the City Engineer or his/her designee. The following table shall be used for minimum asphalt pavement surfacing depths:

ASPHALT PAVEMENT COURSE THICKNESS

Application	Minimum Pavement
Parking Lots and Driveways	3 inch
Local Streets	3 inch + preservation coat after 1 year
Secondary Access Roads	3 inch + preservation coat after 1 year (if pavement is required)
Collector/Arterial Streets	4 inch + preservation coat after 1 year

Streets shall have an approved preservation coat installed 1 year after the end of construction inspection, pending amenable conditions for installation. At the City's discretion, the contractor may arrange to have the City install the preservation coat at the Contractor's expense. The funds for a preservation coat shall be provided in escrow prior to recording the subdivision plat.

C. Road-base Section. All roads shall have a minimum 8 inches of road-base under the pavement section. Road-base shall be an untreated base course installed according to City standards. See Section 350. Earthwork and Trenching. Road-base shall be finished to a smooth uniform line and grade and shall extend a minimum of 12" beyond the pavement surface for placements without curb and gutter. For placements with curb and gutter it shall extend 12" beyond the back of curb.

D. Sub-base Section. All sub-base shall be an engineered fill that meets and is installed according to City standards. See Section 350. Earthwork and Trenching. Sub-base shall be finished to a smooth uniform line and grade and shall extend a minimum of 12" beyond the pavement surface for placements without curb and gutter. For placements with curb and gutter it shall extend 12" beyond the back of curb. The thicker section shall be used in the case where CBR may be in conflict. The following table shall be used for minimum sub-base course thicknesses for the following California Bearing Ratio (CBR) values of sub-grade:

PARKING LOTS AND DRIVEWAYS
MINIMUM SUB-BASE COURSE THICKNESSES

Sub-grade CBR	Minimum Sub-base Thickness (inches)
Less than 2	12
2.1 to 8.0	8
More than 8	No Sub-base Required

LOCAL STREET / SECONDARY ACCESS
MINIMUM SUB-BASE COURSE THICKNESS

Sub-grade CBR	Minimum Sub-base Thickness (inches)
Less than 2	15
2.1 to 3.0	12
3.1 to 10.0	8
More than 10	No Sub-base Required

COLLECTOR / ARTERIAL STREET
MINIMUM SUB- BASE COURSE THICKNESS

Sub-grade CBR	Minimum Sub-base Thickness (inches)
Less than 2.0	18
2.1 to 3.0	15
3.1 to 5.0	12
5.1 to 15.0	8
More than 15	No Sub-base Required

E. Grading. The sub-grade, sub-base, and road base shall all be graded to an engineered red-head and accepted by the City. Red-heads shall be placed every 50 feet at the crown of the road. If the distance between red-heads and edge of pavement exceeds 25 feet additional redheads shall be installed halfway between the crown and edge of pavement.

600.030. Trail Section.

A. General. A pavement and soils investigation shall be performed for Class A and B trails. The results of this investigation and a design of the trail section shall be submitted to and accepted by the City Engineer or his/her designee.

The following guidelines shall be used as a minimum requirement for Class A thru D trail cross sections. They should be used unless the soils investigation indicates they are not adequate. Any variations from these standards must be approved by the City Engineer or his/her designee. All trail materials shall be placed according to City standards.

1. *Engineered Fill.* Compacted engineered fill shall be placed in all areas where fills are required to meet grade or the requirements of the soils investigation.
2. *Untreated Base Course.* 6 inches of compacted untreated base course shall be placed under the surface course of Class A thru D trails.
3. *Bituminous Surface Course.* A minimum of 2 inches of APWA DM-1/2, PG 58-28, 50 Blow or SP-3/8, PG58-28, 75Nd bituminous surface course shall be placed across 8 feet of the trail section.

a. A maximum of 15% RAP or 15% Recycled Binder Replacement, whichever is less, will be allowed.

B. Survey. Both sides of a trail shall be laid out by a survey and approved by the City before construction. Lath shall be placed at 100 foot intervals and at bends and obstacles the trail comes near.

C. Weed Abatement. All weeds shall be sprayed and killed with Roundup or an approved equivalent one week before any work may be performed, and within 3 weeks of the placement of untreated base course.

D. Geotextile Fence. An APWA 31 05 19 (Geotextiles) silt fence shall be installed along the limits of the trail construction at hillsides, river embankments, or by or through City Open Space.

E. Sub-grade. The sub-grade shall be grubbed of all trees, bushes and other organic matter. Sub-grade shall be graded to meet the following ADA requirements for walkways when required on ADA accessible pathways:

1. *Maximum Slope.* Sub-grade shall not have a slope greater than 8.33%.
2. *Maximum Run for Steep Slopes.* For slopes between 5.00% and 6.25% the maximum run shall be 40 feet. For slopes between 6.25% and 8.33% the maximum run shall be 30 feet.

F. Weed Barrier. Weed barrier geotextile shall meet the requirements and specifications of APWA 31 05 19 (Geotextiles).

G. Trail Markings. Trail lanes shall be delineated by a center single dashed yellow line. Painted traffic lines and markings shall meet the requirements and specifications of APWA 32 17 23 (Pavement Markings) and the MUTCD.

H. Clean-up. Upon completion of the trail section all windrows, survey and construction debris shall be removed from along the edges of the trail.

600.040. Bituminous Surface Course.

A. Paving Asphalts. Paving asphalts shall meet the requirements and specifications of APWA 32 12 03 (Paving Asphalts). Recycled Asphalt Pavement (RAP) or Recycled Asphalt Binder (RAB) content may not exceed 15% in any mix design.

For all new construction, paving shall not occur until gas and power utilities are installed. Otherdry utility crossings shall be installed and approved by the dry utility company representative and the City Engineer or his/her designee. Crossings shall be surveyed and included on the asbuilt drawings.

Required testing for culinary water, pressurized irrigation, sewer, and storm drain shall be completed and approved by the City Engineer or his/her designee prior to paving.

For all streets, parking lots, trails, and repairs; use 1/2” 50 Blow PG 58-28 mix design.

For paving limitations, see Asphalt Paving Limitations, Section 250.

B. Asphalt Concrete. Asphalt concrete shall meet the specifications and requirements of APWA 32 12 05 (Asphalt Concrete), APWA 32 12 16 (Plant-Mix Asphalt Paving) and APWA 32 12 17 (Cold-Mix Asphalt Paving).

Cold-mix asphalt concrete shall only be installed when allowed by the City Engineer or his/her designee. All cold-mix asphalt concrete shall be replaced with hot-mix within 30 days of when it becomes available.

C. Prime Coat. Prime coat only as required by the plans or the City. Prime coat shall meet the requirements and specifications of APWA 32 12 13 (Prime Coat).

D. Tack Coat. Install tack coat as required and according to APWA 32 12 14 (Tack Coat). Use CSS-1 or CSS-1h tack emulsion diluted 2:1 (concentrate to water).

E. Thin Overlays and Patches. Use binder and bitminuous concrete as defined in Article A based on paver or hand applications. Apply tack coat to all horizontal and vertical surfaces sufficient to achieve minimum 95% coverage prior to placement of overlay or patch.

F. Slurry Seal. Slurry seals shall meet the requirements and specifications of APWA 32 01 13 (Slurry Seal). The type of slurry seal applied to a City street shall be approved and specified by the City Engineer.

G. Chip Seal. Chip seals shall meet the requirements and specifications of APWA 32 01 13 (Chip Seal).

H. Micro-Surfacing. Micro-surfacing shall meet the requirements and specifications of APWA 32 01 15 (Micro-Surface Seal).

I. Pavement Crack Seal. Pavement crack seals shall meet the requirements and specifications of APWA 32 01 17 (Pavement Crack Seal).

J. High Density Mineral Bond Seal. High densit mineral bond seals shall meet the requirements and specifications of APWA 32 01 13 (High Density Mineral Bond Seal).

Section 650. Portland Cement Concrete and Masonry Work.

SECTION INDEX

650.010. General.
- A. Specifications.
- B. Allowable Grades.
- C. American Disabilities Act (ADA) Requirements.
- D. Combination Curb, Gutter, and Sidewalk.
- E. Cold Weather Concrete.
- F. Debris in Gutters.
- G. Sidewalk.
- H. Drive Approaches.
- I. Protection of Wet Concrete.
- J. Repair.

650.020. Installation.
- A. Cutting Pavement.
- B. Forms and Joints.
- C. Base Material.
- D. Mixing and Conveying.
- E. Finishing.
- F. Curing.

650.030. Materials.
- A. Coarse Aggregate.
- B. Fine Aggregate.
- C. Cement.
- D. Water.

650.040. Concrete Mixes.
- A. Mix Design.
- B. Proportioning.
- C. Control.
- D. Water Adjustments.

650.050. Masonry.
- A. General.

650.010. General.

A. Specifications. These specifications cover the installation of concrete work including but not limited to curbs, gutters, sidewalks, boxes, and thrust blocks. All concrete work shall meet the requirements and specifications of APWA Division 03 Concrete and related sections. Concrete driveway, sidewalk, curb and gutter work shall meet the requirements and specifications of APWA 32 16 13 (Driveway, Sidewalk, Curb, Gutter). See Section 200 for improvement and design requirements, Section 250 for inspection and testing requirements, and Section 350 for earthwork and trench requirements. Also, see standard drawings related to concrete work.

All concrete work shall be constructed where indicated on the plans or as directed by the project engineer and shall conform in all respects to the specified lines, grades, and dimensions and City standards.

B. Allowable Grades. The minimum grade allowed for any gutter is 0.50%. See Alpine City Development Code for maximum allowable grades of City streets.

C. American Disabilities Act (ADA) Requirements. All pedestrian facilities will conform to the current federal ADA standards.

D. Combination Curb, Gutter, and Sidewalk. Combination curb, gutter, and sidewalk will not be allowed unless authorized by the City Engineer or his/her designee.

E. Cold Weather Concrete. Concrete shall not be placed when a descending air temperature in the shade and away from artificial heat falls below 35ºF. Concrete shall not be poured on frozen ground. Where temperatures are projected to descend below 32ºF within 72 hours after placement, concrete shall be covered or otherwise protected against freezing. No calcium based add mixtures may be used. Any other add mixtures must be approved by the City Engineer or his/her designee.

If concrete is not protected by insulation blankets for 72 hours following installation and the temperature drops below 45 degrees a pay factor of 0.50 shall apply.

Per APWA Division 03, concrete placed between October 1 and March 1 requires an increase in mix design strength by 1 class, i.e. Class 3000 becomes Class 4000, Class 4000 becomes Class 5000, etc.

F. Debris in Gutters. Once curb and gutter and surface course is in place they shall be kept as clean as possible. Dirt and gravel shall not be placed in gutter or on street. Gutter shall flow freely at all times.

G. Sidewalk. Sidewalk shall be 5 inches thick with 6 inches of compacted road base. To protect the structural integrity of new sidewalk, all dry utilities shall be installed prior to installing sidewalk. When equipment is required to cross over sidewalk, bridging must be provided to protect concrete.

H. Drive Approaches. All City owned drive approaches shall be 5 inches thick with 6 inches of compacted road base. Commercially owned drive approaches are recommended to be 6 inches thick.

I. Protection of Wet Concrete. The Contractor shall be responsible to protect wet concrete. Any concrete that is vandalized before setting up shall be replaced at the contractor's expense.

J. Repair. When authorized by the City Engineer or his/her designee, Contractor may repair concrete damage with Concrete Solution's Ultra Surface Concrete Polymer installed to manufacturer's specifications or an equivalent that is approved by the City Engineer or his/her designee.

650.020. Installation.

A. Cutting Pavement. When replacing gutter, the pavement shall be cut along the entire excavation to provide a vertical joint in the surface. Cut shall be a minimum of 12 inches from lip of gutter. A pavement saw shall be used for all pavement cutting. If excavation damages the cut pavement, pavement shall be cut again before patching. All road cuts shall be repaired within 2 working days.

B. Forms and Joints. When pouring concrete along a curve, flexible forms with enough stakes to hold the forms at an even curve shall be used.

Curb and gutter contraction joints shall be constructed every 10 feet by using steel templates 1/8 inch in thickness. Sidewalk contraction joints shall meet APWA requirements with the minimum distance between joints being 5 feet.

C. Base Material. A minimum of 6 inches of untreated base course shall be installed under all concrete and shall extend out 1 foot in all directions from concrete unless otherwise specified. Untreated base course shall be compacted and installed according to City standards. See Section 350. Earthwork and Trenches.

D. Mixing and Conveying. Concrete transported in a truck mixer, agitator, or other transportation device shall be discharged at the job and placed in its final position in the forms within 1 hour after the introduction of the mixing water to the cement and the aggregate, or the cement to the aggregate, except that in hot weather or under other conditions contributing to quick stiffening of the concrete, the maximum allowable time may be reduced by the City Engineer or his/her designee. The maximum volume of mixed concrete transported in an agitator shall be in accordance with the specified rating. During adverse weather conditions the City Engineer or his/her designee may deem it necessary for the use of a concrete pump truck.

E. Finishing. As soon as the concrete has set sufficiently to retain its shape without support of the face form, the clamps, spreaders and face forms shall be removed. While the concrete is still green, the surface shall be thoroughly floated with a magnesium or moist wooden float to provide an even smooth surface, then broomed lightly.

F. Curing. As soon as possible after final finishing, the finished surface shall be coated with a curing compound. The compound shall be an ASTM C-1315 Type 2 curing compound that meets the APWA 03 39 00 (Concrete Curing) specifications. The compound shall be applied in accordance with the manufacturer's recommendations. During the months of October through February exposed concrete shall be covered with an insulated curing blanket that meets the ACI 306 specification for 3 days when temperatures remain at 15 degrees Fahrenheit or higher and for 7 days for temperatures below 15 degrees Fahrenheit. Insulated curing blankets shall only be removed during the warmest parts of the day. The curing compound shall then be applied within 24 hours of the blankets being removed.

650.030. Materials.

A. Coarse Aggregate. A coarse aggregate shall consist of hard durable particles of a mixture of crushed and natural gravel possessing at least 50% of broken surface area. The coarse aggregate shall be free from substances which are chemically active relative to hydrated cement and shall be subject to particularly the following:

1. Loss on abrasion by Los Angeles Abrasion Test not more than 40% by weight.
2. Loss on exposure to 5 cycles of sodium sulfate soundness test, not more than 8% by weight.
3. Deleterious substances shall not exceed the values in the following table:

PORTLAND CEMENT CONCRETE
COURSE AGGREGATE DELETERIOUS SUBSTANCES

Substance	Maximum % by Weight
Soft Fragments	3.0
Coal Lumps	1.0
Clay Lumps	0.5
Material passing 39 100 Sieve	1.5
Organic Material	0.1
Total for All of the Above	3.0

The maximum size of aggregate to be used shall not exceed 1 1/2 inches in terms of this size definition contained in ASTM Standards except that the maximum size shall not exceed 1/4 of the least dimension of the finished concrete in which the aggregate is to be used.

Coarse aggregate shall be uniformly graded within the following range:

PORTLAND CEMENT CONCRETE
COARSE AGGREGATE GRADATION

Sieve Size	Minimum Retained (%)	Maximum Retained (%)
1 1/2 inch	0	10
3/4 inch	30	70
1/4 inch	75	100
No. 4	95	100

B. Fine Aggregate. Fine aggregate shall consist of clean, hard durable particles of natural sands, subject to the following limitations:
   1. Organic Calorimetric Test using sodium hydroxide shall result in a color not darker than Number 2 in the acceptance range.
   2. Loss on exposure to 5 cycles of the sodium sulfate soundness tests shall not exceed 8% by weight.
   3. Deleterious substances shall not exceed the values in the following table:

PORTLAND CEMENT CONCRETE
FINE AGGREGATE DELETERIOUS SUBSTANCES

Substance	Maximum % by Weight
Soft Fragments	3.0
Coal Lumps	1.0
Material passing 39 100 Sieve	3.0
Micaceous or Flaky Particles	3.0
Total for All of the Above	5.0

Fine aggregate shall be uniformly graded within the following range:

PORTLAND CEMENT CONCRETE
FINE AGGREGATE GRADATION

Sieve Size	Minimum Retained (%)	Maximum Retained (%)
No. 4	0	5
No. 8	0	20
No. 16	20	50
No. 30	50	75
No. 50	75	90
No. 100	95	100

C. Cement. All cement used shall be Type II unless otherwise allowed by the City Engineer or his/her designee. All cement and dry additives shall be stored in damp-proof conditions. Shipments of cement shall be marked and stored in such a manner as to provide positive identification. The supplier shall keep and have available for inspection at all times an accurate record of supplies and use of cement of the various types and shipments. No cement shall be used which has been subject to dampness or exposure.

D. Water. Water used for concrete shall be potable and free from excess salts, organic material, or other deleterious substances. Addition of water to the mixed concrete after specified workability has been obtained will not be allowed, nor shall any concrete be re-tempered or re-mixed.

650.040. Concrete Mixes.

A. Mix Design. Concrete mix designs shall meet the following requirements:

PORTLAND CEMENT CONCRETEMIX DESIGN REQUIREMENTS

Property	Standard Requirement	Thrust Block Material
Cement Content	6.5 Bags per Cubic Yard (Minimum)	3.5 Bags per Cubic Yard (Minimum)
28 Day Compressive Strength	4000 psi (Minimum)*	2000 psi (Minimum)*
Slump Range	1 to 3 inches	1 to 6 inches
Flatwork Slump Range	3 to 4 inches	NA
Air Content	5% to 7%	NA

* Per APWA 03 30 04, increase cement content in the mix design by 1 class between **October 1 and March 1**, i.e. Class 4000 becomes Class 5000.

B. Proportioning. The supplier shall determine proportions by weight of aggregates, cement, additives, and water required to comply with strength, workability, and other requirements detailed herein. Such proportions shall be submitted to the City Engineer or his/her designee in three copies annually along with the following tests on materials and shall be subject to his/her approval.

1. Coarse aggregate
    a. Source
    b. Deleterious substances
    c. Los Angeles Abrasion Test
    d. Sodium Sulfate Soundness Test
    e. Sieve
2. Fine aggregate
    a. Source
    b. Deleterious substances
    c. Calorimetric Test for Organics
    d. Sodium Sulfate Soundness Test
    e. Sieve and fineness modulus
3. Cement
    a. Type
    b. Supplier
    c. Analysis

Upon approval, all concrete shall be prepared in terms of the proportions so approved unless variation becomes necessary by reason of materials or conditions to achieve the requirements of these specifications, in which case such variation shall be approved in writing by the City Engineer or his/her designee. Approval by the engineer of mix proportions shall not relieve the supplier from the responsibility for obtaining the concrete strengths specified or complying will all other provisions of this specification.

C. Control. Measurements of materials except water shall be by weight. Equipment used shall be capable of controlling weight within 1% of each ingredient. Water may be measured either by volume or weight provided that an accuracy of 1% is maintained. Cement may be assumed to weigh 94 pounds per sack but proportioning aggregates for fractional sacks of cement will not be permitted unless the fractional amount is weighed for each batch.

D. Water Adjustments. Compensation for the water contained in the aggregates shall be made at least once daily or as often as inspection of the concrete may indicate that variation from this cause has occurred. The Pycnometer Method of assessing water in aggregate may be used for its determination for the purposes of this paragraph.

650.050. Masonry.

A. General. All masonry work shall meet the requirements and specifications of APWA Division 04 Masonry and related sections.

Section 850. Surface Irrigation Systems.

SECTION INDEX

850.010. General.
- A. Specifications.
- B. Size.
- C. Location.
- D. Minimum Slopes.
- E. Unusual Piping and Plumbing.

850.020. Pipe and Fittings.
- A. General.
- B. Concrete Pipe.
- C. Polyethylene Pipe.
- D. Corrugated Metal Pipe.

850.010. General.

A. Specifications. Piped irrigation facilities shall be required per Alpine City Development Code. Facilities shall meet the requirements and specifications of APWA 33 41 00 (Storm Drainage Systems). These specifications cover the installation of storm/irrigation lines. See Section 200 for improvement and design requirements, Section 250 for inspection and testing requirements, and Section 350 for earthwork and trench requirements. See standard drawings related to storm/irrigation lines.

B. Size. The City Engineer or his/her designee must approve the sizes of all proposed drain lines. The minimum size shall be determined based on Alpline Irrigation Company and Alpine City needs.

C. Location. Piped irrigation systems shall be located as close to the original ditch system as possible. Variations in location must be approved by the City Engineer or his designee and the Alpine Irrigation Company. A maximum of 400 feet of pipe shall be allowed between manholes.

D. Minimum Slopes. Slopes shall be designed to have a 2 foot per second velocity unless otherwise approved by the City Engineer. The following table lists minimum slopes for irrigation lines for each size of pipe:

MINIMUM IRRIGATION PIPE SLOPES

Pipe Diameter (inches)	Minimum Slope (%)
24	0.077
30	0.057
36	0.045
48	0.031
54	0.027
60	0.023

E. Unusual Piping and Plumbing. Special and unusual piping and plumbing for equipment or structures are treated as separate items and are not included in these standards.

850.020. Pipe and Fittings.

A. General. Reinforced concrete pipe shall be used for all lines with less than 2 feet of cover or more than 8 feet of cover. Corrugated metal pipe (CMP) may only be used when authorized by the City Engineer or his/her designee.

B. Concrete Pipe. Concrete pipe shall meet the requirements and specifications of APWA 33 05 02 (Concrete Pipe and Culvert). Reinforced concrete pipe (RCP) shall be Class III. Only new pipe may be used unless otherwise authorized by the City Engineer or his/her designee.

C. Polyethylene Pipe. Polyethylene pipe shall meet the requirements and specifications of APWA 33 05 06 (Polyethylene Pipe) Type S for storm drains and Type SP for land or groundwater drains.

D. Corrugated Metal Pipe (CMP). CMP shall meet the requirements and specifications of APWA 33 05 04 (Corrugated Metal Pipe).

Section 900. Landscaping.

SECTION INDEX

900.010. General.
A. Specifications.
B. Appurtenances.
C. As-Built Drawings.
D. Government Regulations.
E. Source.
F. Fences and Walls.
G. Tree Grates.
H. Vegetation Control.

900.020. Lawns and Grasses.
A. General.
B. Grading.

900.030. Ground Cover.
A. General.

900.040. Trees.
A. General.
B. Tree Sizes.
C. Labels.

900.010. General.

A. Specifications. These specifications are for landscape work completed on public property or private property that will become public property.

B. Appurtenances. Any minor items of labor or materials not specifically noted on the drawings or specifications; but obviously necessary for the proper completion of the work, are to be considered as incidental to and are to be included in the contract.

C. As-Built Drawings. The contractor must furnish as-build drawings to the City. These drawings should be updated whenever a change from the design is made to assure accuracy. The drawings must show a record of all departures from the contract drawings that occur during construction. These shall be kept on a clean set of prints of the contract drawings.

The Project Manager/Owner will review the "as-built drawings" to verify that changes are being recorded as construction occurs. These drawings and maintenance manuals must be submitted at the time of final inspection or in accordance to the general conditions.

D. Government Regulations. Ship landscape materials with certificates of inspection as required by governmental authorities. Comply with governing regulations applicable to landscape materials.

E. Source. Provide trees and shrubs, and other plants grown in a recognized nursery in accordance with good horticultural practice. Provide healthy, vigorous stock grown under climatic conditions similar to the locality of the project and free of disease, insects, eggs, larvae, and defects such as knots, sun-scale, injuries, abrasions, or disagreement.

Plant Materials and other landscape items will be evaluated according to compliance with drawings, schedules, and specifications; as well as overall aesthetic quality, grower or supplier reputation, physical inspection, and American Association of Nurseryman Standards (AANS). Select plants that will not be adversely affected by the existing soil chemistry at the planting location.

The source or supplier for all plant materials shall be furnished to the City prior to the delivery of any plant materials on site or stored elsewhere.

F. Fences and Walls. All fences and walls must be approved by the City. Chain link and field wire fencing shall meet the requirements and specifications of APWA 32 31 13 (Chain Link Fences and Gates) and APWA 32 31 16 (Welded Wire Fences and Gates) respectively. The relocation of fences and gates shall meet the requirements and specifications of APWA 32 01 10 (Relocate Fences and Gates) and related sections.

G. Tree Grates. Only 4 foot square D&L O-8644 or approved equivalent grates shall be used. Grates shall be set to grade with the top back of curb and sidewalk. Grates shall be set in metal frame manufactured specifically for grate. Frame shall be set in concrete extending a minimum of 6 inches from sides of frame. Concrete shall be installed to City standards for Portland Cement Concrete.

H. Vegetation Control. Vegetation control shall meet the requirements and specifications of APWA 31 31 19 (Vegetation Control).

900.020. Lawns and Grasses.

A. General. Lawns and grasses shall meet the requirements and specifications of APWA 32 92 00 (Turf and Grasses).

B. Grading. Till soil to a depth of 4 inches and remove rocks and debris over 1 inch in diameter. The elevation of top soil relative to walks, hard surfaces or edges shall be:

1. *Seeded Areas.* 1/2 inches below.
2. *Sodded Areas.* 1 1/2 inches below.

900.030. Ground Cover.

A. General. Ground cover shall meet the requirements and specifications of APWA 32 93 13 (Ground Cover) and APWA 32 01 90 (Plant Maintenance). Install according to APWA plan number 683.

900.040. Trees.

A. General. Tree and work relating to trees shall meet the requirements and specifications of APWA 32 93 43 (Tree), APWA 32 01 91 (Tree Root Cutting), APWA 32 01 93 (Pruning Trees) and 32 01 90 (Plant Maintenance). Install according to APWA plan number 681. Use 6 foot posts for any tree staking. Trees may be planted without a certified arborist when authorized by the City Engineer or his/her designee.

B. Tree Sizes. Follow Alpine City Tree Guidebook

C. Labels. Label at least one plant of each variety with a securely attached waterproof tag bearing legible designation of botanical and common name.

Section 950. Irrigation Sprinkler Systems.

SECTION INDEX

950.010. General.
- A. Specifications.
- B. Appurtenances.
- C. Pressure Verification.
- D. Plan Modifications.
- E. As-Built Drawings.
- F. Final Inspection.

950.020. Pipe and Fittings.
- A. Pipe.
- B. Main Line Fittings.
- C. Circuit Pipe Fittings.
- D. Sleeves.

950.030. Sprinkler Heads.
- A. General.
- B. Spray Heads.
- C. Rotary Heads.

950.040. Controller, Valves and Flow Meters.
- A. Controller.
- B. Manual Main Line Isolation Valve.
- C. Manual Circuit Isolation Valve.
- D. Automatic Valves.
- E. Master Valves and Flow Meters.
- F. Automatic Drain Valves.
- G. Back Flow Preventer.
- H. Stop and Waste Valves.
- I. Quick Coupler Valves.
- J. Valve Boxes.
- K. Control Wire.

950.050. Installation.
- A. Schedule.
- B. Depth and Location.
- C. Trench Backfill Material.
- D. Thrust Blocks.
- E. Flushing.
- F. Gluing.
- G. Marking Zones.

950.010. General.

A. Specifications. These specifications are for landscape work completed on private property that will become public property. All underground irrigation systems shall meet the requirements and specifications of APWA 32 84 23 (Underground Irrigation Systems).

B. Appurtenances. Any minor items of labor or materials not specifically noted on the drawings or specifications; but obviously necessary for the proper completion of the work, are to be considered as incidental to and are to be included in the contract.

C. Pressure Verification. The Contractor, prior to installing the system, must verify existing water pressure. If there is a failure to obtain the needed pressure or if an excess of pressure exists for normal operation, the Contractor shall contact the City for any adjustments to the system. Failure to report any discrepancies in pressure due to whatever reason, and installation done prior to notification of City Parks Department shall be done at the expense of the Contractor.

D. Plan Modifications. The plans show the general arrangement of all piping. Should local conditions necessitate the rearrangement of some, or if piping can be run to better advantage, the contractor, before proceeding with the work, shall prepare and submit drawings of such to the office of the Alpine City Parks Department Representative and obtain written approval before commencing work shown by these drawings.

E. As-Built Drawings. Before the final inspection is complete, the contractor must furnish as-build drawings. These drawings should be updated on a daily basis to assure accuracy. The drawings must show the location of all valves, pipe, heads, controller control lines, and drain valves used on the job. These drawings and maintenance manuals must be submitted at the time of final inspection or in accordance to the general conditions.

F. Final Inspection. The Contractor shall operate, maintain, and guarantee the irrigation sprinkler system until all landscaping on the project is approved by the Alpine City Parks Department at a final inspection. Contractor shall submit manufacturer's technical product maintenance data and installation instructions for irrigation sprinkler system materials and products to the City before final inspection.

950.020. Pipe and Fittings.

A. Pipe. Use solvent weld schedule 40 PVC for main line pipe 3 inches in diameter and smaller. Use Class 200 PVC for main line pipe larger than 3 inches in diameter.

B. Main Line Fittings. Use solvent weld schedule 40 PVC fittings for pipe smaller than 3 inches in diameter. All fittings for pipe 3 inch and larger pipe shall be ductile iron, grade 65-45-12 in accordance with ASTM A-536.

Fittings shall have deep bell push on joints with gaskets meeting ASTM F977. Fittings shall be Harco Deep Bell as manufactured by the Hanington Corporation of Lynchburg, VA or approved equivalent. Transition gaskets are not allowed.

C. Circuit Pipe Fittings. Use solvent weld schedule 40 PVC fittings.

D. Sleeves. Pipe and control wiring and tubing under walks, roads and other hard surfaces shall be installed in solvent weld Class 40 PVC sleeves of adequate size. Sleeves for pipes shall be a minimum of 3 inches in diameter or one and a half times the size of the pipes whichever is greater. Sleeves shall be straight and level or less than 2% grade. All wiring shall be placed in its own conduit. Wire conduit may be ran inside of sprinkler pipe sleeves. Conduit for control wires shall have minimum inside diameters according to the following chart:

MINIMUM SLEEVE CONDUIT SIZES

Number of Wires	Conduit I.D.
1 to 7	1 inch
8 to 11	1 ½ inch
12 to 22	2 inch
23 to 31	2 ½ inch
32 to 36	3 inch

950.030. Sprinkler Heads.

A. General. Install according to APWA plan number 621 and 622, but do not install PVC elbow and riser.

B. Spray Heads. All spray type sprinkler heads shall be Rainbird "1804" PRS (pressure reducing spray) series or approved equivalent. All lawn spray heads shall be installed on swing pipe with two spiral barbed ells.

C. Rotary Heads. All rotary type sprinkler heads shall be Rainbird Falcon 6500 or RS5000 series or approved equivalent. All stream rotary and impact heads capable of distributing 10 gallons per minute or more shall be installed on pre-assembled swing joint by Spears or an approved equivalent.

950.040. Controller, Valves and Flow Meters.

A. Controller. Controller and pedestal shall be the same type as those used in the City central control system. The controller shall be as described in the irrigation legend on the drawings.

B. Manual Main Line Isolation Valve. See standard drawing for pressure pipe main line valves.

C. Manual Circuit Isolation Valve. Brass ball valve with handle.

D. Automatic Valves. Automatic valves shall be Rainbird PEB electric remote control valves or an approved equivalent. A manual circuit isolation valve shall be installed on the supply side of each automatic valve. Install according to APWA plan number 633, but do not install schedule 80 PVC union.

E. Master Valves and Flow Meters. Master valves and flow meters must be installed on main supply line and/or according to design and must be compatible with the City central control system.

F. Automatic Drain Valves. Install according to APWA plan number 632.

G. Back Flow Preventer. Shall be required on connections to the drinking water system. See section 400.040, Backflow Assemblies.

H. Stop and Waste Valves. Stop and waste valves shall be Mueller H - 10288 Oraseal or an approved equivalent. Stop and Waste valve shall be of manual type for operation by handle key. Stop and waste valves shall be installed in a typical water meter can, see Standard Details.

I. Quick Coupler Valves. Quick coupler valves shall be installed with brass riser and pre-manufactured swing joint. At least 2 quick coupler valves shall be installed, one at each end of main line. Valves shall be 1 inch standard.

J. Valve Boxes. Valves shall be located in lawn or planted areas. Avoid locating valves in areas of high pedestrian and vehicular circulation. Valve boxes shall be at finished grade with valve stems 4 inches minimum and 12 inches maximum below top of box and with 3 inches of pea gravel or 3/4 inch minus crushed gravel under the valve. Valve boxes shall be rectangular, heavy duty and green in color. Valve boxes for automatic valves shall be large enough to enclose manual circuit isolation valve and automatic valve.

K. Control Wire. Install wire according to APWA plan number 651. Add two extra blue control wires per controller to the longest run for emergency use and mark it in the control box as an extra wire.

950.050. Installation.

A. Schedule. Contractor shall submit a construction schedule of anticipated work time to facilitate timely visits for review of work. Schedule must be submitted to the City before any landscaping may begin

B. Depth and Location. Lines bordering curbs or sidewalks shall be 6 inches away to allow for maintenance and access to the lines. Control wires must be buried at least 12 inches below finished grade and bundled with a plastic tape every 20 feet.

C. Trench Backfill Material. All trenches shall be backfilled in 12 inch lifts and tamped sufficiently to insure no settling of the surface. No rocks larger than 1 inch shall be allowed within 3 inches of the pipe. The Contractor, in placing the irrigation lines, and appurtenances, may uncover material not suitable for finished grading. This material shall be removed from the site. After the installation of the lines, the finished grading shall be smoothed over and restored to its original condition, using additional topsoil where necessary.

D. Thrust Blocks. All mainlines greater than 2 inches in size shall be installed with thrust blocks wherever a change of direction occurs. Thrust blocks shall be installed as follows:

1. Bearing area of concrete thrust-block based on 200-PSI pressure and safe soil bearing load of 2,000 pounds per square foot.
2. Concrete blocking shall be cast in place and have a minimum of 1/4 square foot bearing against the fittings.
3. Block shall bear against fittings only and shall be clear of joints.
4. Contractor shall install block adequate to withstand full test pressure as well as to continuously withstand operation pressure under all conditions of service.

E. Flushing. When the pipe lines are connected and the sprinkler risers in place but before any heads are installed, the control valves shall be opened and flushed with a full head of water to clean out the system.

F. Gluing. Gluing of PVC pipes shall be done with gray “Weld-on 711” and “Weld-on P70” primer.

G. Marking Zones. Valves must be tagged with labels indicating which zone they operate.

Section 1000. Standard Details

Signed: Jed Muhlestein

Alpine City Engineer

CONSTRUCTION DETAILS

Adopted _____, 2020

ALPINE CITY STANDARD DETAILS

ALPINE CITY ADOPTS 2017 APWA STANDARD SPECIFICATIONS AND DETAILS. FOR CITY SPECIFIC DETAILS, PLEASE SEE THE FOLLOWING:

STREETS

1. Street Cross-Sections
2. Alternate Street Cross-Sections
3. Street Cross-Sections Unequal Elevations
4. Sidewalk, Curb & Gutter, Waterway
5. Class A & B Trail Cross-Sections
6. Class C, D, & E Trail Cross-Sections
7. Cul-de-sac Detail
8. Knuckle Detail
9. Standard Setbacks
10. Temporary Turn-a-round

UTILITIES

11. Standard Street Intersection and Utility Location
12. Standard Lot Utility Locations
13. Utility Conflict
14. City Utilities in Common Trench
15. Ditch Crossing
16. Manhole Ring & Cover (typical)
17. Sewer Manhole & Service Connection (typical)
18. Storm Drain Sump (typical)
19. Sump Disposal (typical)
20. Curb Face Drop Inlet Box (typical)
21. Dipstone Outlet
22. Flush Valve (typical)
23. Fire Hydrant
24. Pressurized Irrigation Service
25. Pressurized Irrigation Service w/ PRV
26. Pressurized Irrigation Airvac
27. Water Connection & Valve Box Details
28. Temporary Sewer Main Cleanout

MISC

29. Public Open Space Fencing
30. Fencing Regulations
31. Street Lights

32. Sight Triangle
33. Standard Seed Mixtures
34. Irrigation Company Ditches

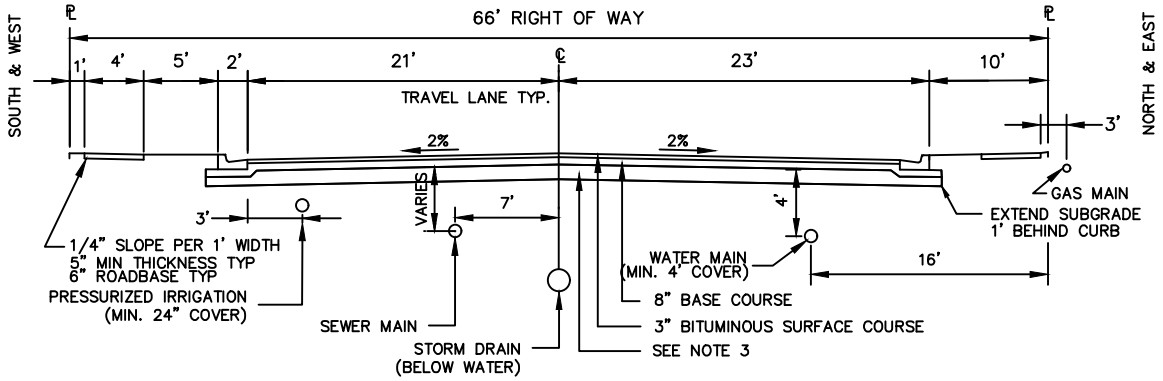

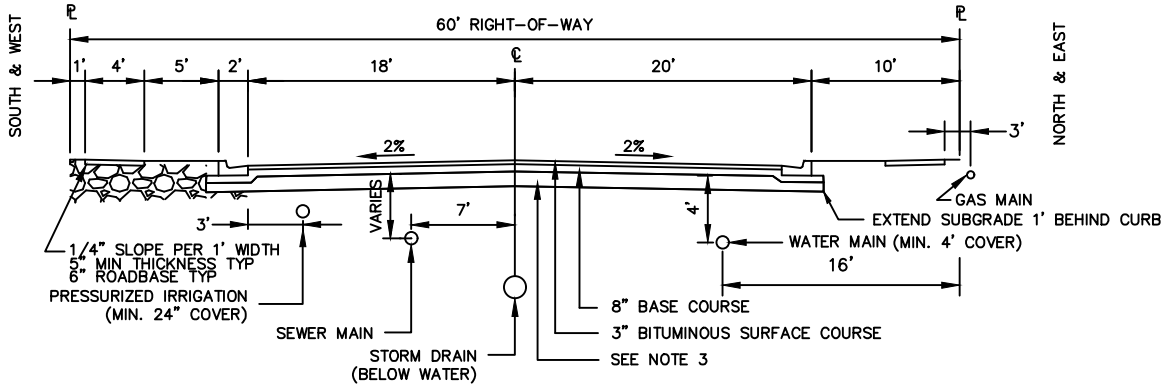

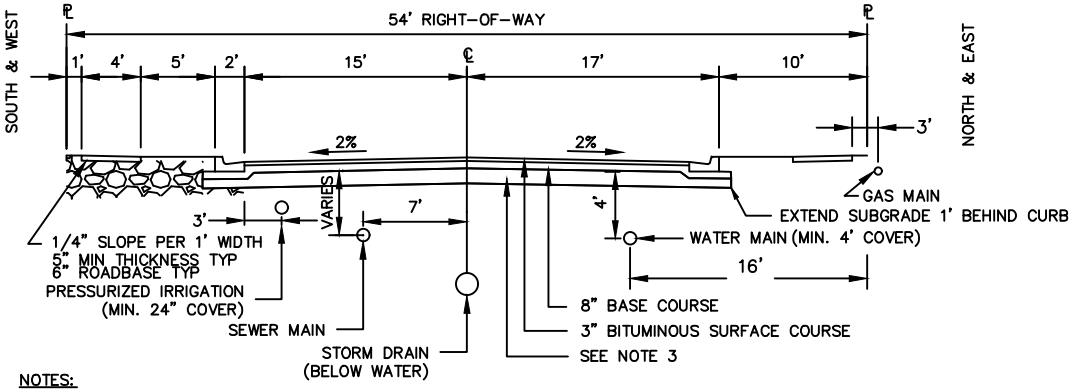

NOTES:

1. WATER VALVES AND 5-INCH VALVE OPENING MUELLER FIRE HYDRANTS SHALL BE LOCATED AS APPROVED.
2. NO WATER LINE SMALLER THAN 8-INCH DIA. SHALL BE INSTALLED WITHOUT APPROVAL OF CITY COUNCIL.
3. SUBGRADE DEPTHS VARY DEPENDING ON CBR VALUE OF THE AREA, SEE ALPINE CITY STANDARD SPECIFICATIONS
4. CULINARY WATER MAINS SHALL BE ON THE NORTH AND EAST SIDES OF THE STREET.
   PRESSURIZED IRRIGATION AND SEWER LINES SHALL BE ON THE SOUTH AND WEST SIDES OF THE STREET.

STREET CROSS-SECTIONS & UTILITY LOCATIONS

N.T.S.

STATEMENT OF USE

THIS DOCUMENT AND ANY ILLUSTRATIONS HEREON ARE PROVIDED AS STANDARD CONSTRUCTION DETAILS WITHIN ALPINE CITY. DEVEATION FROM THIS DOCUMENT REQUIRES APPROVAL OF ALPINE CITY, ALPINE CITY CORPRTATION CAN NOT BE HELD LIABLE FOR MISSUSE OR CHANGES REGARDING THIS DOCUMENT.

REVISION

NO.		BY	APRL	DATE

ALPINE CITY
ESTABLISHED 1850

CAD FILE: E:\ENGINEERING\STANDARD DRAWINGS\2015 UPDATED (CURRENT)\ STREET CROSS-SECTIONS

STREET CROSS-SECTIONS

ALPINE CITY
20 NORTH MAIN
ALPINE, UT 84004

STANDARD DRAWING NUMBER:	1
PLOT SCALE:	N.T.S.
DRAWN BY:	B.D.B.
DESIGN BY:	
CHECKED BY:	
ADOPTED DATE:	10/13/05

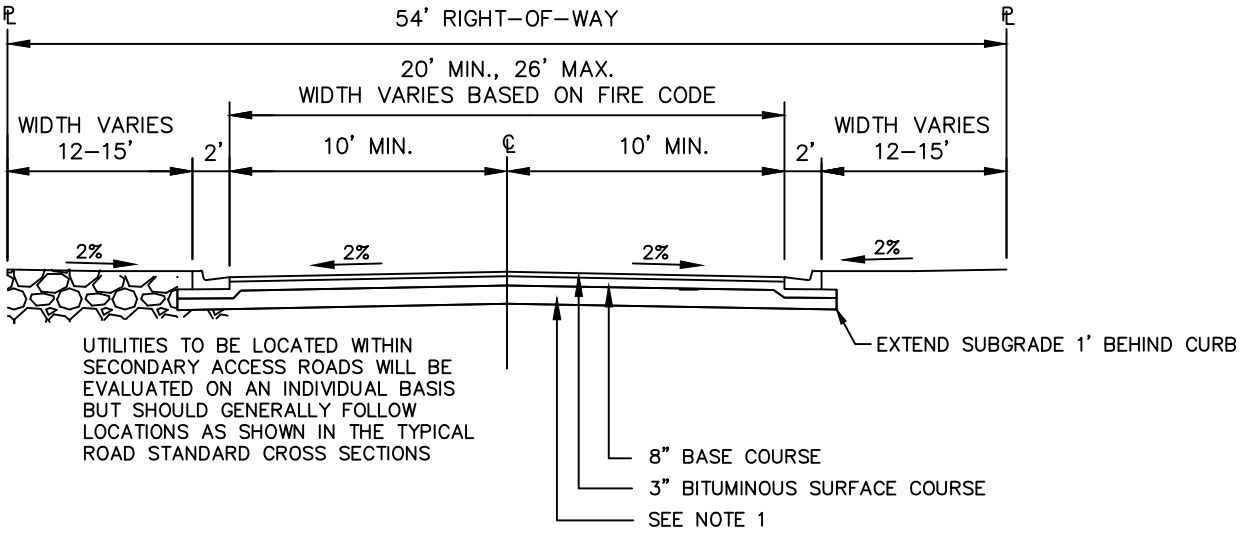

NOTES:

1. SUBGRADE DEPTHS VARY DEPENDING ON CBR VALUE OF THE AREA, SEE ALPINE CITY STANDARD SPECIFICATIONS
2. FIRE CODE REQUIRES AN "ALL WEATHER" SURFACE FOR SECONDARY ACCESS ROUTES. IT IS AT THE DISCRETION OF THE CITY COUNCIL WHETHER SECONDARY ACCESS ROADS WILL BE ASPHALT OR GRAVEL. SEE GRAVEL OPTION BELOW.

SECONDARY ACCESS

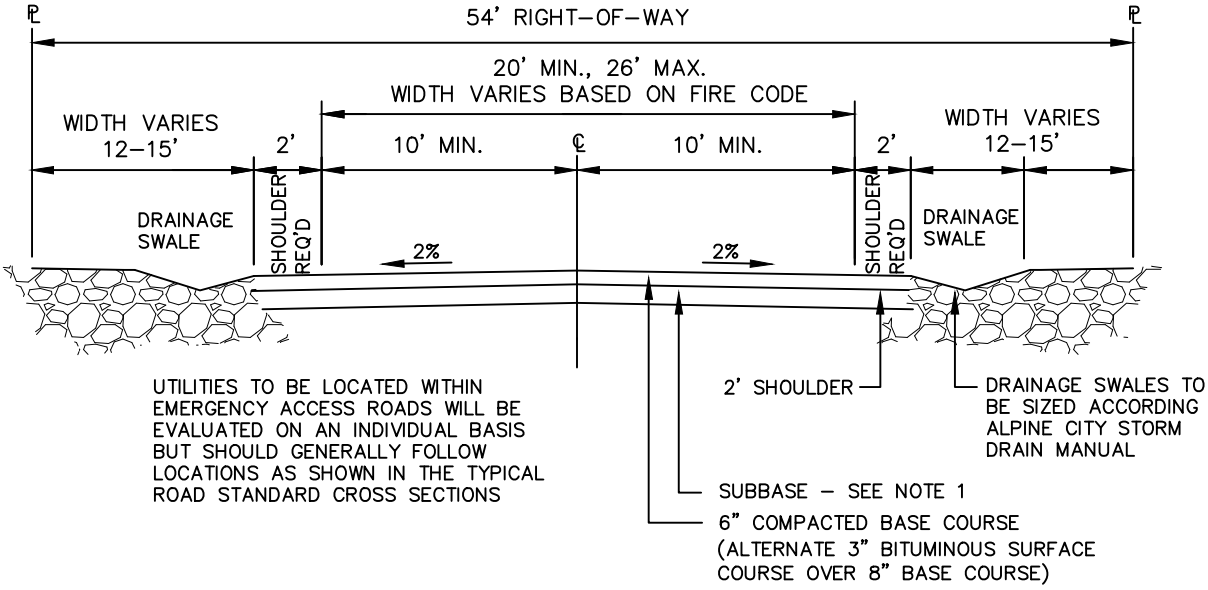

NOTES:

1. SUBGRADE DEPTHS VARY DEPENDING ON CBR VALUE OF THE AREA, SEE ALPINE CITY STANDARD SPECIFICATIONS
2. CURB AND GUTTER MAY OR MAY NOT BE REQUIRED AT THE DISCRETION OF THE CITY COUNCIL

SECONDARY ACCESS OPTION

STREET CROSS-SECTIONS

N.T.S.

STATEMENT OF USE

THIS DOCUMENT AND ANY ILLUSTRATIONS HEREON ARE PROVIDED AS STANDARD CONSTRUCTION DETAILS WITHIN ALPINE CITY. DEVEATION FROM THIS DOCUMENT REQUIRES APPROVAL OF ALPINE CITY, ALPINE CITY CORPRTATION CAN NOT BE HELD LIABLE FOR MISSUSE OR CHANGES REGARDING THIS DOCUMENT.

REVISION

NO.		BY	APRL	DATE

CAD FILE: E:\ENGINEERING\STANDARD DRAWINGS\2015 UPDATED (CURRENT)\1A STREET CROSS-SECTIONS (SECONDARY & EMERGENCY)

ALPINE CITY
ESTABLISHED 1850

STREET CROSS-SECTIONS

ALPINE CITY
20 NORTH MAIN
ALPINE, UT 84004

STANDARD DRAWING NUMBER:	1A
PLOT SCALE:	N.T.S.
DRAWN BY:	B.D.B.
DESIGN BY:	
CHECKED BY:	
ADOPTED DATE:	10/13/05

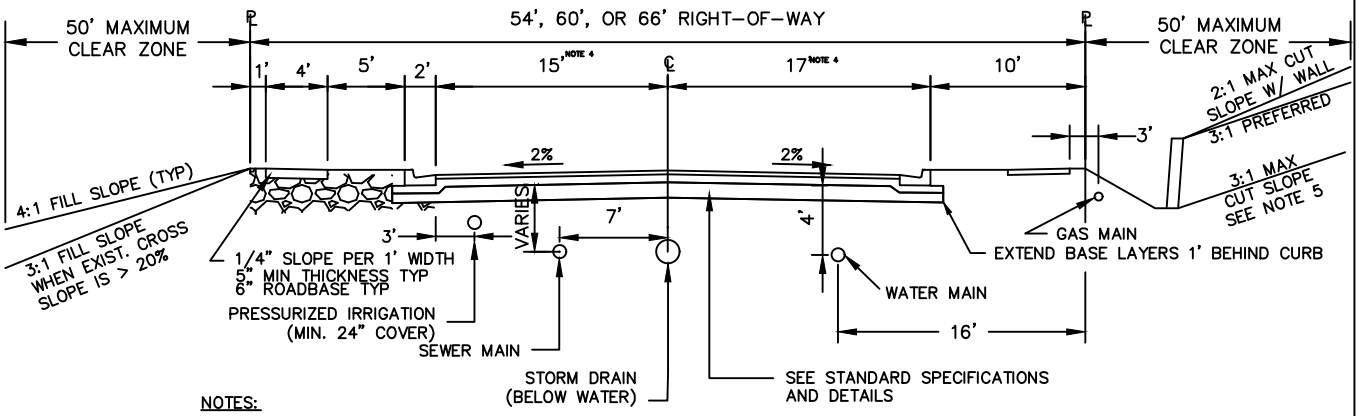

NOTES:

1. CLEAR ZONE DEFINES THE MAXIMUM HORIZONTAL DISTANCE PERPENDICULAR TO ROAD THAT CAN BE DISTURBED TO CONSTRUCT STREET SECTION.
2. ENGINEERED RETAINING WALLS ARE ALLOWED PER DEVELOPMENT CODE SECTION 3.32
3. BORROW DITCH AND CROSS DRAIN PIPES SHALL BE DESIGNED SUCH THAT SILTS AND MATERIAL WILL NOT ENTER STREET CROSS SECTION. POND ON CUT SIDE OF ROAD, AND / OR DRAIN TO APPROPRIATE COLLECTION / DETENTION SYSTEM ON FILL SIDE OF ROAD. REFER TO ALPINE CITY STORM DRAIN DESIGN MANUAL.
4. WIDTH VARIES PER RIGHT OF WAY, SEE STANDARD DETAILS.
5. CUT SLOPES GREATER THAN 3:1 MAY BE ALLOWED PER GEOTECHNICAL REPORT RECOMMENDATION. UNDER NO CIRCUMSTANCE WILL A CUT SLOPE GREATER THAN 2:1 BE ALLOWED WITHOUT A RETAINING WALL.

STREET CROSS-SECTIONS WITH REQUIRED CUT AND FILL SLOPES

N.T.S.

STATEMENT OF USE

THIS DOCUMENT AND ANY ILLUSTRATIONS HEREON ARE PROVIDED AS STANDARD CONSTRUCTION DETAILS WITHIN ALPINE CITY. DEVEATION FROM THIS DOCUMENT REQUIRES APPROVAL OF ALPINE CITY, ALPINE CITY CORPRTATION CAN NOT BE HELD LIABLE FOR MISSUSE OR CHANGES REGARDING THIS DOCUMENT.

REVISION

NO.		BY	APRL	DATE

ALPINE CITY ESTABLISHED 1850

CAD FILE: E:\ENGINEERING\STANDARD DRAWINGS\2015 UPDATED (CURRENT)\1B STREET CROSS-SECTIONS WITH CUT AND FILL SLOPES

STREET CROSS-SECTIONS

ALPINE CITY
20 NORTH MAIN
ALPINE, UT 84004

STANDARD DRAWING NUMBER: 1b

PLOT SCALE:	N.T.S.
DRAWN BY:	WJM
DESIGN BY:	
CHECKED BY:	
ADOPTED DATE:	10/13/05

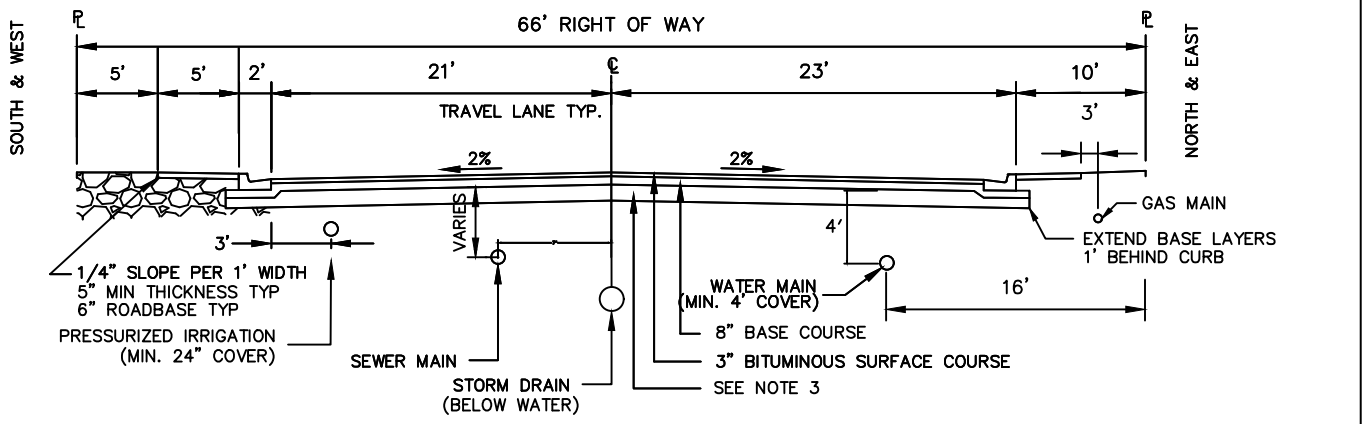

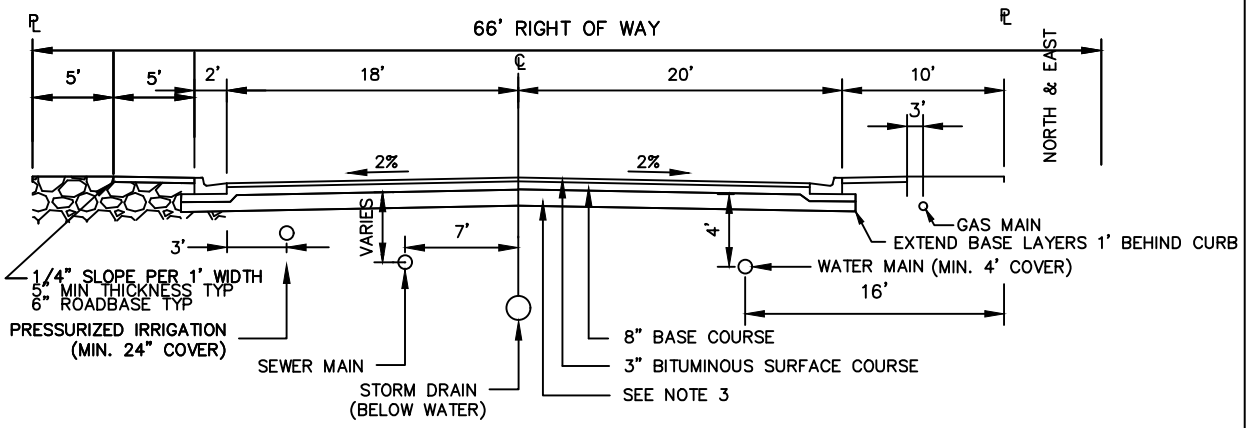

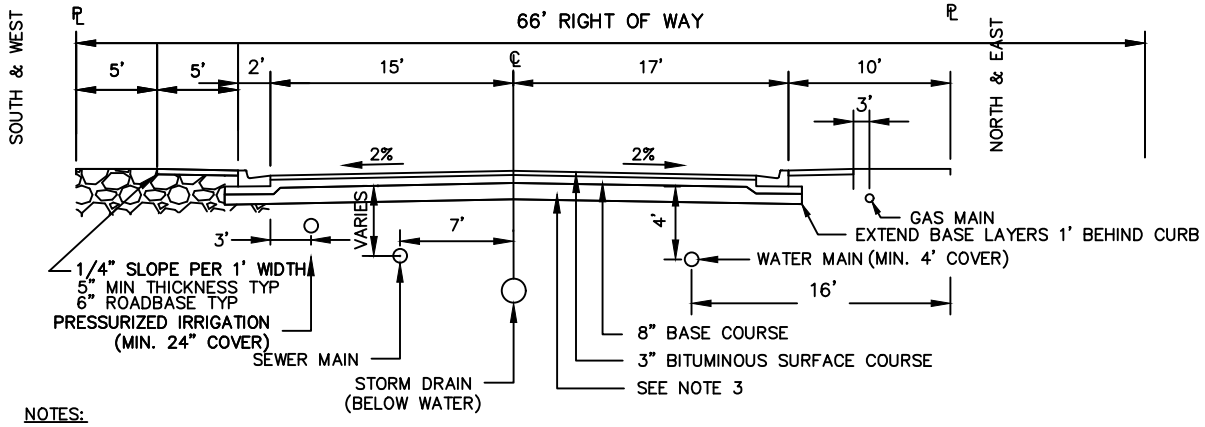

NOTES:

1. WATER VALVES AND 5-INCH VALVE OPENING MUELLER FIRE HYDRANTS SHALL BE LOCATED AS APPROVED.
2. NO WATER LINE SMALLER THAN 8-INCH DIA. SHALL BE INSTALLED WITHOUT APPROVAL OF CITY COUNCIL.
3. SUBGRADE DEPTHS VARY DEPENDING ON CBR VALUE OF THE AREA, SEE ALPINE CITY STANDARD SPECIFICATIONS.
4. CULINARY WATER MAINS SHALL BE ON THE NORTH AND EAST SIDES OF THE STREET.
   PRESSURIZED IRRIGATION AND SEWER LINES SHALL BE ON THE SOUTH AND WEST SIDES OF THE STREET.
5. USE OF ALTERNATE STREET CROSS-SECTIONS REQUIRES APPROVAL BY ALPINE CITY.

ALTERNATE STREET CROSS-SECTIONS & UTILITY LOCATIONS

N.T.S.

STATEMENT OF USE

THIS DOCUMENT AND ANY ILLUSTRATIONS HEREON ARE PROVIDED AS STANDARD CONSTRUCTION DETAILS WITHIN ALPINE CITY. DEVEATION FROM THIS DOCUMENT REQUIRES APPROVAL OF ALPINE CITY, ALPINE CITY CORPRTATION CAN NOT BE HELD LIABLE FOR MISSUSE OR CHANGES REGARDING THIS DOCUMENT.

REVISION

NO.		BY	APRL	DATE

ALPINE CITY
ESTABLISHED 1850

CAD FILE: D:\ENGINEERING\STANDARD DRAWINGS\2015 UPDATED (CURRENT)\2 ALTERNATE STREET CROSS-SECTIONS

ALTERNATE STREET CROSS-SECTIONS

ALPINE CITY
20 NORTH MAIN
ALPINE, UT 84004

STANDARD DRAWING NUMBER: 2

PLOT SCALE:	N.T.S.
DRAWN BY:	WJM
DESIGN BY:	
CHECKED BY:	
ADOPTED DATE:	2015

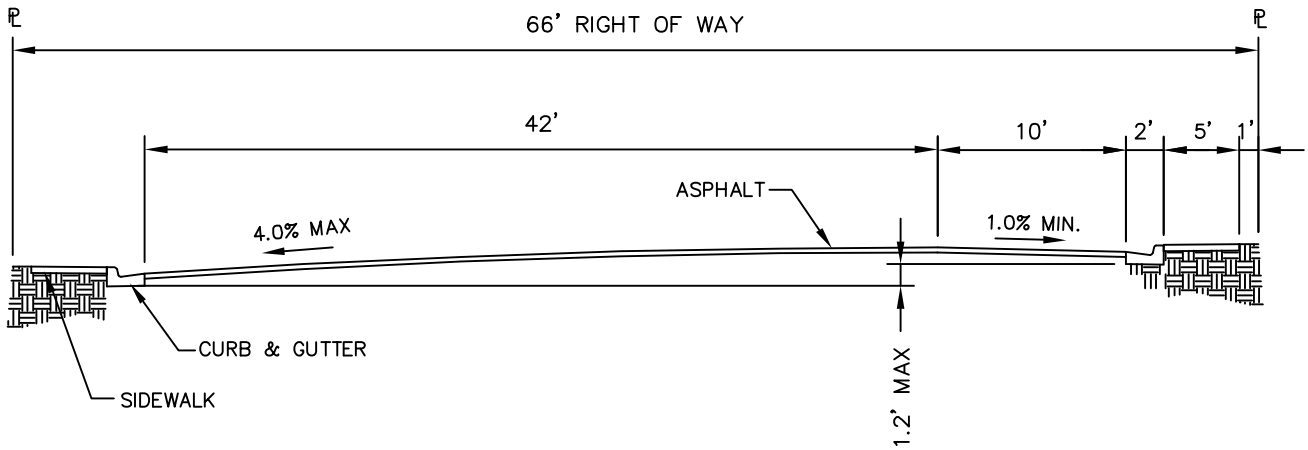

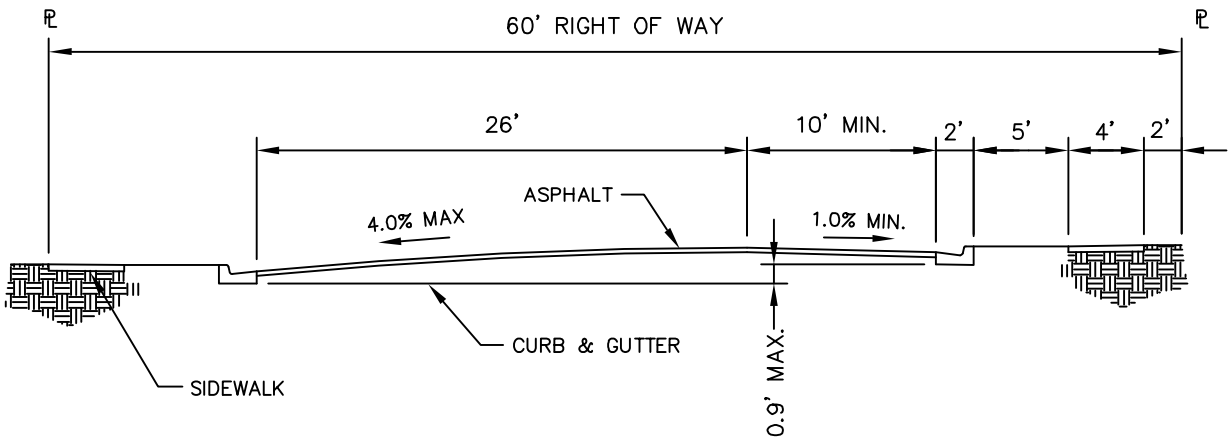

STREET CROSS-SECTIONS

(CURBS AT UNEQUAL ELEVATIONS)

N.T.S.

STATEMENT OF USE

THIS DOCUMENT AND ANY ILLUSTRATIONS HEREON ARE PROVIDED AS STANDARD CONSTRUCTION DETAILS WITHIN ALPINE CITY. DEVEATION FROM THIS DOCUMENT REQUIRES APPROVAL OF ALPINE CITY, ALPINE CITY CORPRTATION CAN NOT BE HELD LIABLE FOR MISSUSE OR CHANGES REGARDING THIS DOCUMENT.

REVISION

NO.		BY	APRL	DATE

ALPINE CITY
ESTABLISHED 1850

CAD FILE: E:\ENGINEERING\STANDARD DRAWINGS\2015 UPDATED (CURRENT)\3 UNEQ-ROW

STREET CROSS-SECTIONS
UNEQUAL ELEVATIONS

ALPINE CITY
20 NORTH MAIN
ALPINE, UT 84004

STANDARD DRAWING NUMBER:	3
PLOT SCALE:	N.T.S.
DRAWN BY:	WJM
DESIGN BY:	
CHECKED BY:	
ADOPTED DATE:	4/14/04

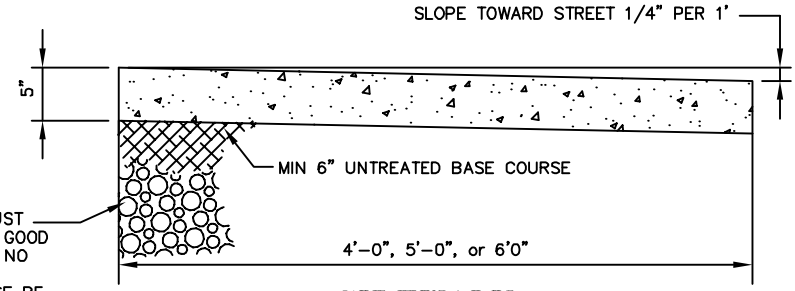

SIDEWWALK SUBBASE MUST GENERALLY CONSIST OF GOOD SOLID GROUND. UNDER NO CIRCUMSTANCES SHALL SIDEWALK AND ROADBASE BE PLACED ON COLLAPSIBLE SOILS, TOPSOIL, NON-ENGINEERED FILLS, LOOSE OR DISTURBED SOILS, SOD, RUBBISH, CONSTRUCTION DEBRIS, FROZEN GROUND, DELETERIOUS MATERIALS, OR WITHIN PONDED WATER. IF SIDEWALK IS PLACED ON FILL, THE FILL MUST BE ENGINEERED FILL, COMPACTED AND TESTED, PER ALPINE CITY STANDARD SPECIFICATIONS.

SIDEWALK

NTS

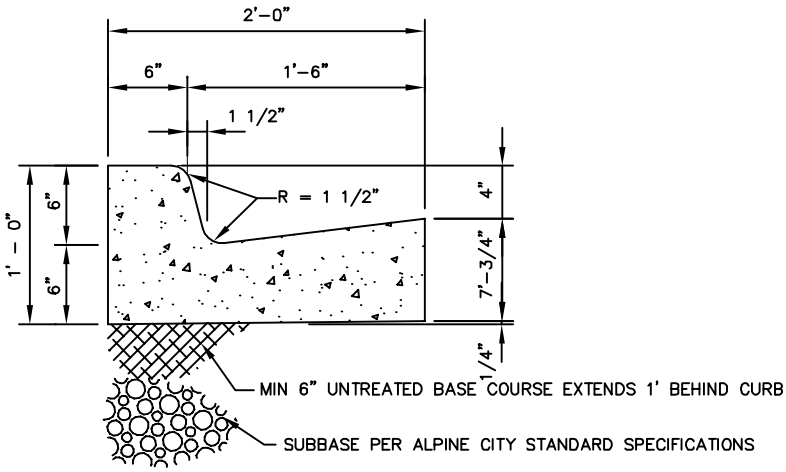

HIGH BACK CURB & GUTTER

NTS

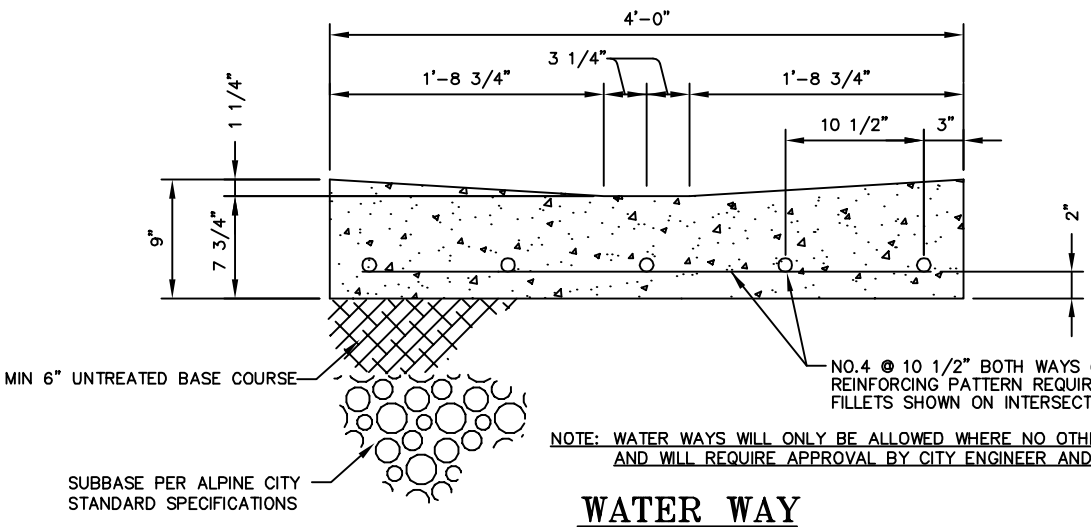

NOTE: WATER WAYS WILL ONLY BE ALLOWED WHERE NO OTHER ALTERNATIVE IS POSSIBLE AND WILL REQUIRE APPROVAL BY CITY ENGINEER AND PUBLIC WORKS DIRECTOR

WATER WAY

NTS

STATEMENT OF USE

THIS DOCUMENT AND ANY ILLUSTRATIONS HEREON ARE PROVIDED AS STANDARD CONSTRUCTION DETAILS WITHIN ALPINE CITY. DEVEATION FROM THIS DOCUMENT REQUIRES APPROVAL OF ALPINE CITY, ALPINE CITY CORPRTATION CAN NOT BE HELD LIABLE FOR MISSUSE OR CHANGES REGARDING THIS DOCUMENT.

REVISION

NO.		BY	APRL	DATE

ALPINE CITY
ESTABLISHED 1850

CAD FILE:E:\ENGINEERING\STANDARD DRAWINGS\2015 UPDATED (CURRENT)\4 SIDEWALK, CURB & GUTTER, WATER WAY

SIDEWALK, CURB & GUTTER, WATER WAY

ALPINE CITY
20 NORTH MAIN
ALPINE, UT 84004

STANDARD DRAWING NUMBER:	4
PLOT SCALE:	N.T.S.
DRAWN BY:	WJM
DESIGN BY:	
CHECKED BY:	
ADOPTED DATE:	4/14/04

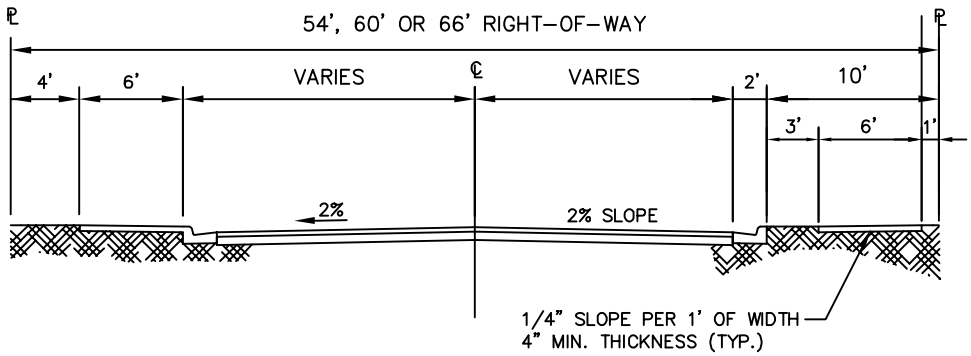

NOTES:

1. ALPINE CITY RESERVES THE RIGHT TO DETERMINE WHETHER THE COMBINATION OR PLANTER STRIP OPTION WILL BE CONSTRUCTED ON A CASE-BY-CASE BASIS.
2. IN SOME CASES, A 5' SIDEWALK WILL BE SUBSTITUTED. IF THE 5' SIDEWALK IS CONSTRUCTED, THE PLANTER STRIP WIDTH WILL BE INCREASED TO 4'.
3. ALL DEVELOPER BUILT TRAILS (NEW OR REFURBISHED) MUST BE BUILT TO INDUSTRY RECOGNIZED STANDARDS AND BE APPROVED BY THE ALPINE CITY TRAIL COMMITTEE. IF TRAILS ARE BUILT ON FILL, THE FILL MUST BE ENGINEERED FILL, COMPACTED AND TESTED, PER ALPINE CITY STANDARD SPECIFICATIONS.

CLASS A (6' SIDEWALK) TRAIL CROSS-SECTION

N.T.S.

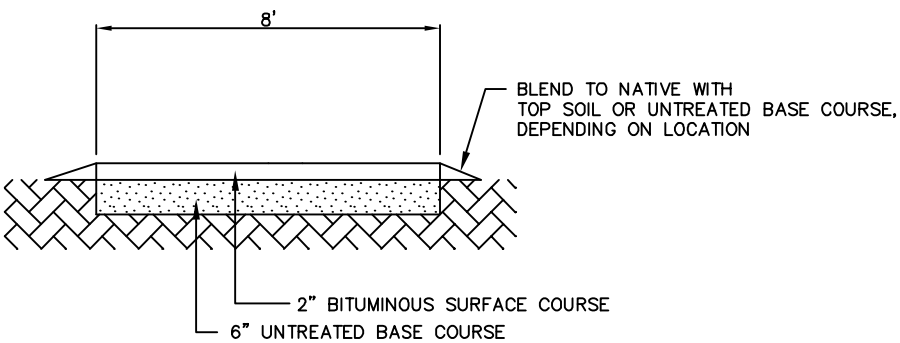

CLASS B (ASPHALT) TRAIL CROSS-SECTION

N.T.S.

STATEMENT OF USE

THIS DOCUMENT AND ANY ILLUSTRATIONS HEREON ARE PROVIDED AS STANDARD CONSTRUCTION DETAILS WITHIN ALPINE CITY. DEVEATION FROM THIS DOCUMENT REQUIRES APPROVAL OF ALPINE CITY, ALPINE CITY CORPRTATION CAN NOT BE HELD LIABLE FOR MISSUSE OR CHANGES REGARDING THIS DOCUMENT.

REVISION

NO.		BY	APRL	DATE

ALPINE CITY
ESTABLISHED 1850

CAD FILE: E:\ENGINEERING\STANDARD DRAWINGS\2015 UPDATED (CURRENT)\5 CLASS A & B TRAIL CROSS-SECTIONS

CLASS A & B TRAIL CROSS-SECTIONS

ALPINE CITY
20 NORTH MAIN
ALPINE, UT 84004

STANDARD DRAWING NUMBER:	5
PLOT SCALE:	N.T.S.
DRAWN BY:	WJM
DESIGN BY:	
CHECKED BY:	
ADOPTED DATE:	4/14/04

NOTE:
ALL DEVELOPER BUILT TRAILS (NEW OR REFURBISHED) MUST BE BUILT TO INDUSTRY RECOGNIZED STANDARDS AND BE APPROVED BY THE ALPINE CITY TRAIL COMMITTEE. IF TRAILS ARE PLACED ON FILL, THE FILL MUST BE ENGINEERED FILL, COMPACTED AND TESTED, PER ALPINE CITY STANDARD SPECIFICATIONS.

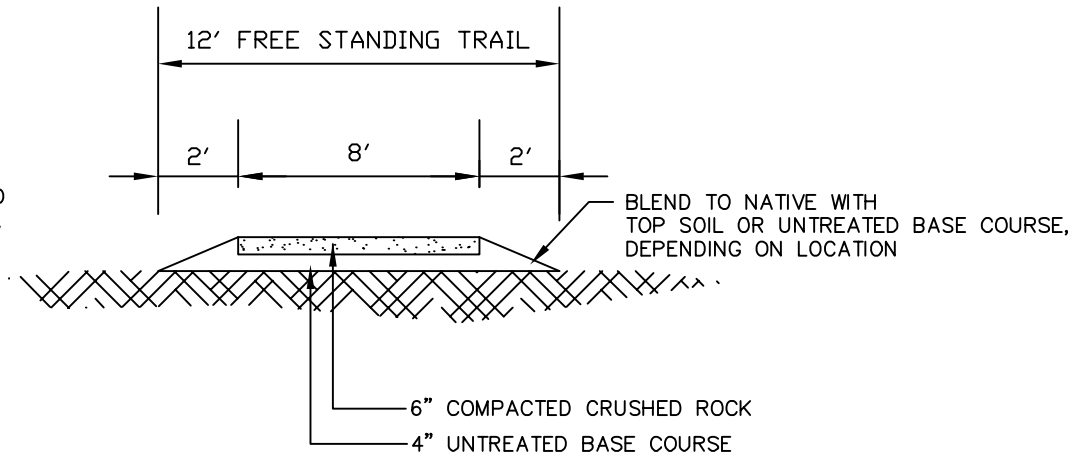

CLASS C 8' CRUSHED ROCK TRAIL CROSS-SECTION

N.T.S.

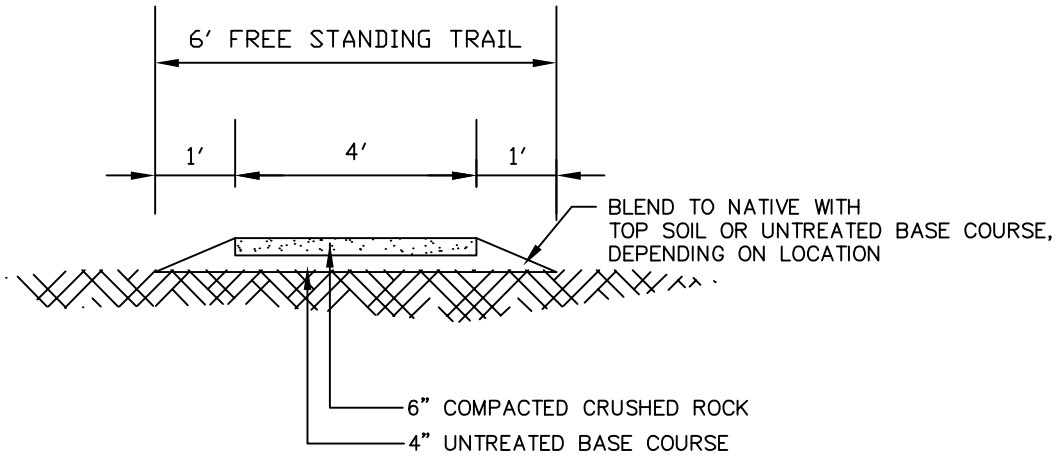

CLASS D 4' CRUSHED ROCK TRAIL CROSS-SECTION

N.T.S.

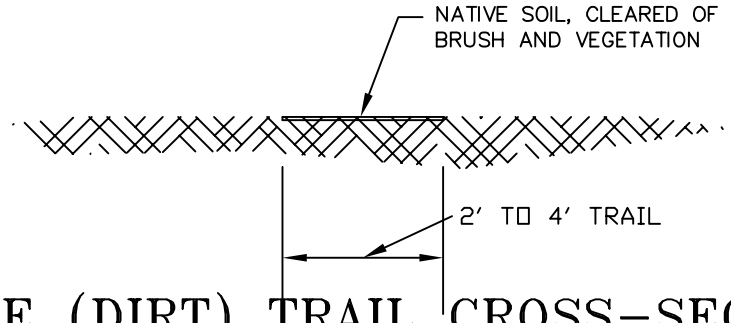

CLASS E (DIRT) TRAIL CROSS-SECTION

N.T.S.

STATEMENT OF USE

THIS DOCUMENT AND ANY ILLUSTRATIONS HEREON ARE PROVIDED AS STANDARD CONSTRUCTION DETAILS WITHIN ALPINE CITY. DEVEATION FROM THIS DOCUMENT REQUIRES APPROVAL OF ALPINE CITY, ALPINE CITY CORPRTATION CAN NOT BE HELD LIABLE FOR MISSUSE OR CHANGES REGARDING THIS DOCUMENT.

REVISION

NO.		BY	APRL	DATE

ALPINE CITY
ESTABLISHED 1850

CAD FILE: E:\ENGINEERING\STANDARD DRAWINGS\2010 UPDATED (CURRENT)\6 CLASS C & D TRAIL CROSS-SECTIONS

CLASS C, D, & E TRAIL CROSS-SECTIONS

ALPINE CITY
20 NORTH MAIN
ALPINE, UT 84004

STANDARD DRAWING NUMBER:	6
PLOT SCALE:	N.T.S.
DRAWN BY:	WJM
DESIGN BY:	
CHECKED BY:	
ADOPTED DATE:	10/13/05

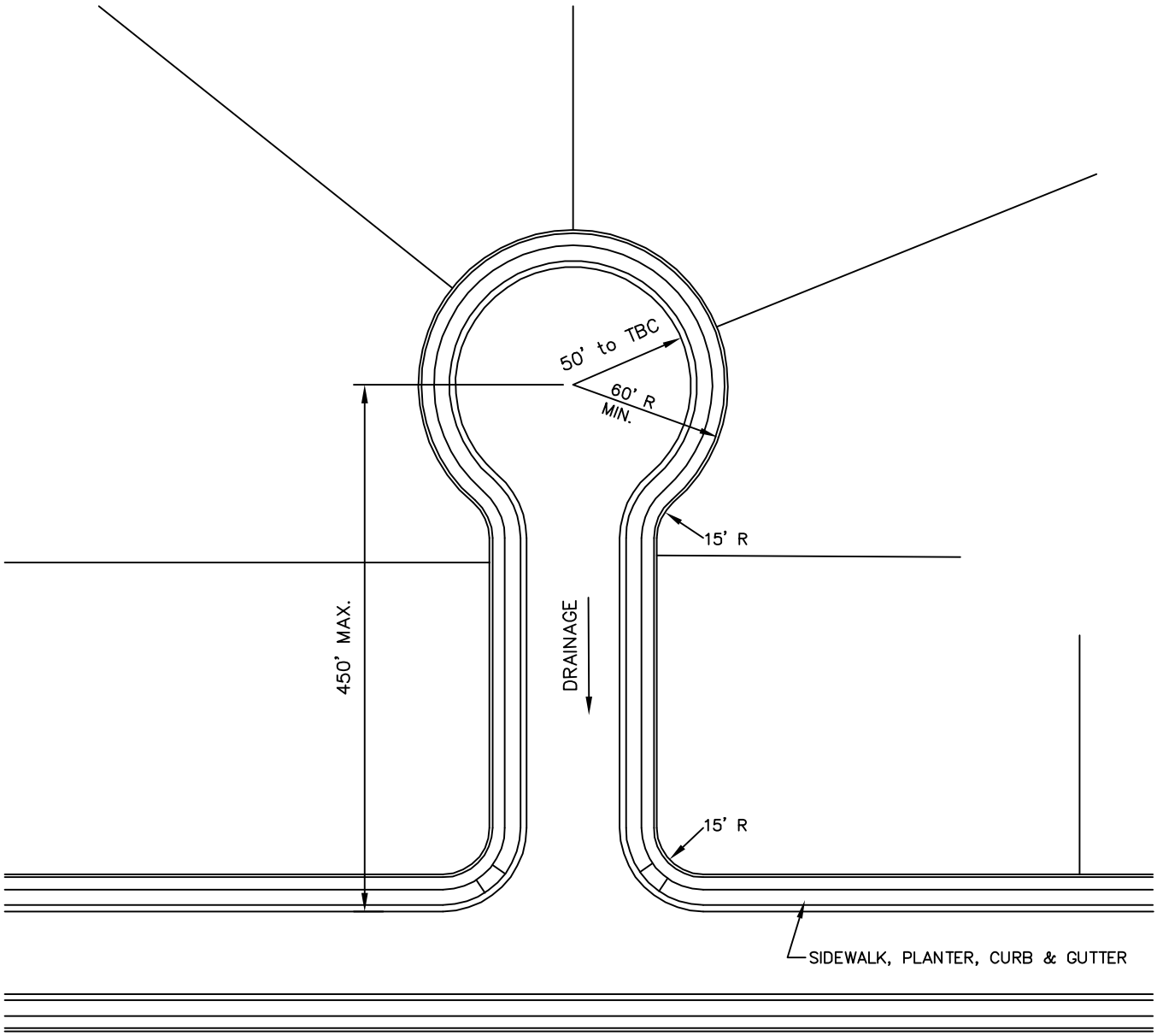

CUL–DE–SAC DETAIL

N.T.S.

STATEMENT OF USE

THIS DOCUMENT AND ANY ILLUSTRATIONS HEREON ARE PROVIDED AS STANDARD CONSTRUCTION DETAILS WITHIN ALPINE CITY. DEVEATION FROM THIS DOCUMENT REQUIRES APPROVAL OF ALPINE CITY, ALPINE CITY CORPRTATION CAN NOT BE HELD LIABLE FOR MISSUSE OR CHANGES REGARDING THIS DOCUMENT.

REVISION

NO.		BY	APRL	DATE

ALPINE CITY
ESTABLISHED 1850

CAD FILE: E:\ENGINEERING\STANDARD DRAWINGS\2015 UPDATED\7 CUL-DE-SAC DETAIL

CUL-DE-SAC DETAIL

ALPINE CITY
20 NORTH MAIN
ALPINE, UT 84004

STANDARD DRAWING NUMBER:	7
PLOT SCALE:	N.T.S.
DRAWN BY:	BDB
DESIGN BY:	
CHECKED BY:	
ADOPTED DATE:	10/13/05

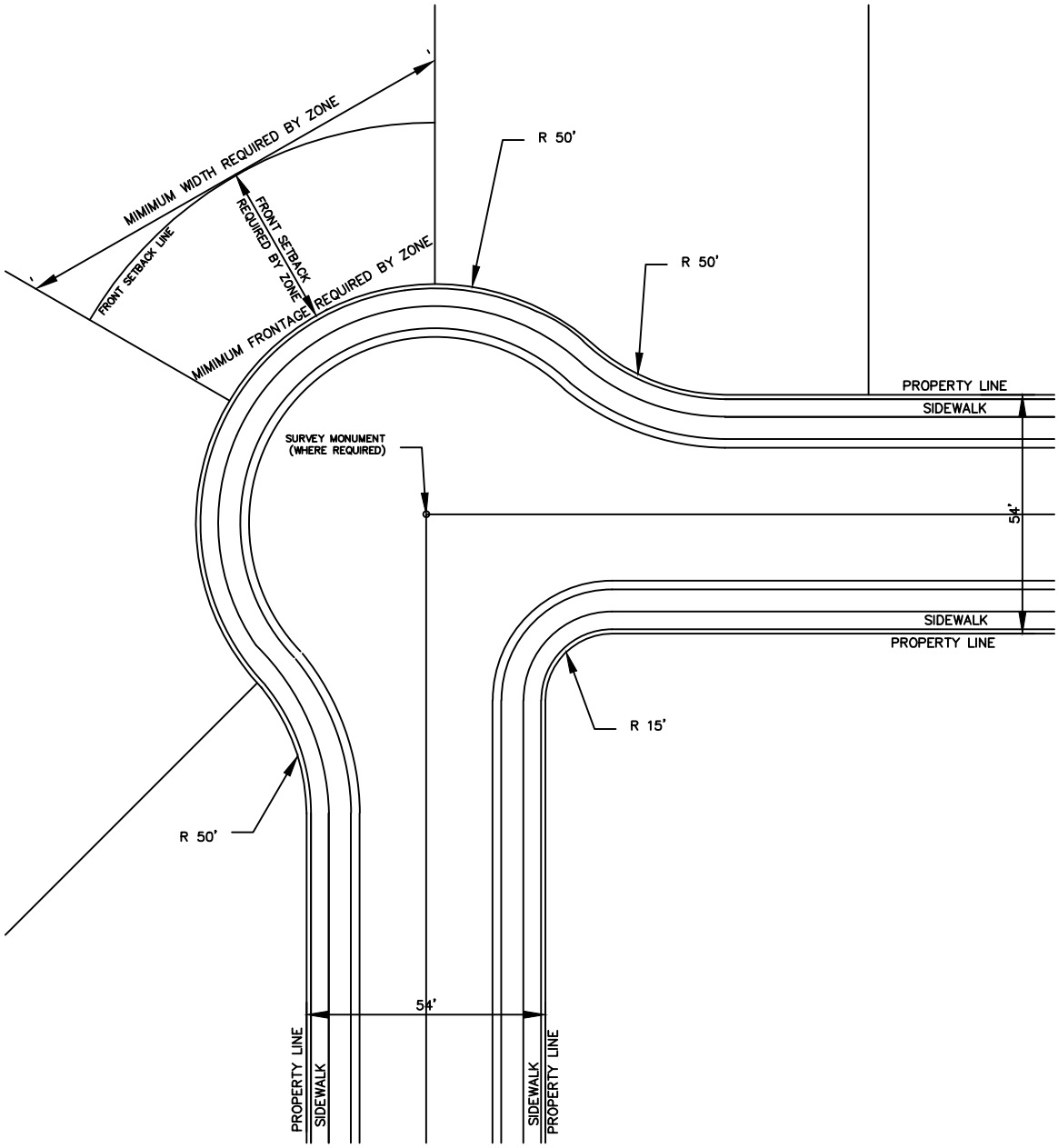

KNUCKLE DETAIL

N.T.S.

STATEMENT OF USE

THIS DOCUMENT AND ANY ILLUSTRATIONS HEREON ARE PROVIDED AS STANDARD CONSTRUCTION DETAILS WITHIN ALPINE CITY. DEVEATION FROM THIS DOCUMENT REQUIRES APPROVAL OF ALPINE CITY, ALPINE CITY CORPRTATION CAN NOT BE HELD LIABLE FOR MISSUSE OR CHANGES REGARDING THIS DOCUMENT.

REVISION

NO.		BY	APRL	DATE

ALPINE CITY
ESTABLISHED 1850

CAD FILE: E:\ENGINEERING\STANDARD DRAWINGS\2015 UPDATED\8 KNUCKLE DETAIL

KNUCKLE DETAIL

ALPINE CITY
20 NORTH MAIN
ALPINE, UT 84004

STANDARD DRAWING NUMBER: 8

PLOT SCALE:	N.T.S.
DRAWN BY:	BDB
DESIGN BY:	
CHECKED BY:	
ADOPTED DATE:	10/11/05

FRONT, REAR, AND SIDE YARDS

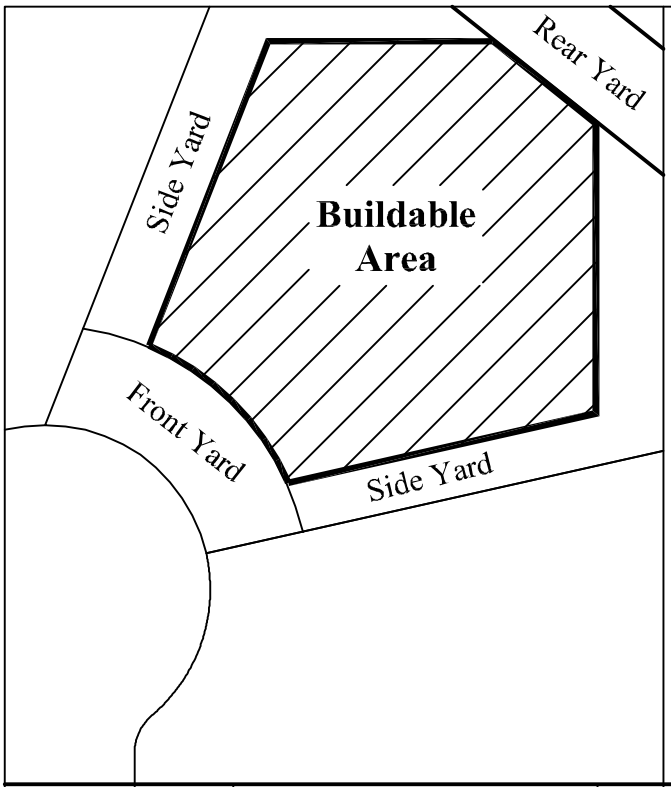

Figure A:
Cul-de-Sac
or
Irregular Shaped Lot

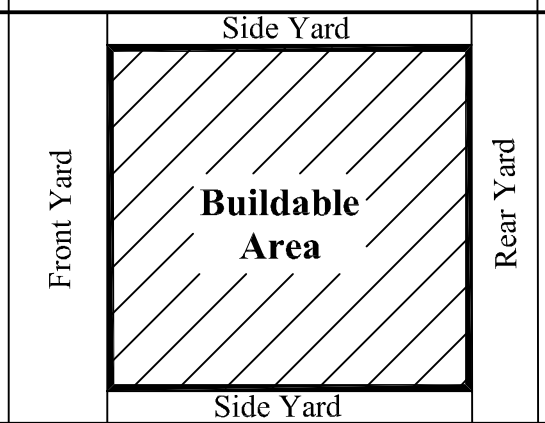

Figure B:
Interior Lot
(Typical)

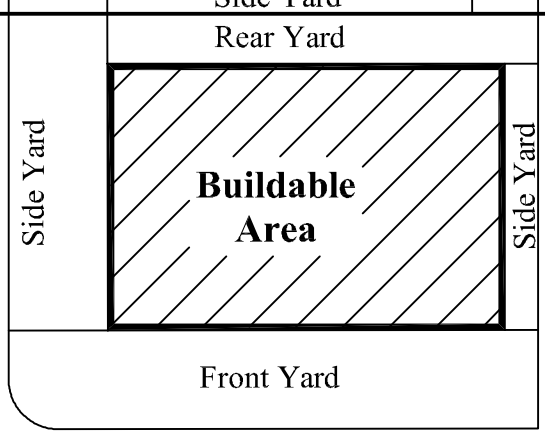

Figure C:
Corner Lot
(Typical)

STATEMENT OF USE

THIS DOCUMENT AND ANY ILLUSTRATIONS HEREON ARE PROVIDED AS STANDARD CONSTRUCTION DETAILS WITHIN ALPINE CITY. DEVEATION FROM THIS DOCUMENT REQUIRES APPROVAL OF ALPINE CITY, ALPINE CITY CORPRTATION CAN NOT BE HELD LIABLE FOR MISSUSE OR CHANGES REGARDING THIS DOCUMENT.

REVISION

NO.		BY	APRL	DATE

ALPINE CITY
ESTABLISHED 1850

CAD FILE: E:\ENGINEERING\STANDARD DRAWINGS\2015 UPDATED\9 SETBACKS

Standard Setbacks

ALPINE CITY
20 NORTH MAIN
ALPINE, UT 84004

STANDARD DRAWING NUMBER: 9

PLOT SCALE:	N.T.S.
DRAWN BY:	WJM
DESIGN BY:	
CHECKED BY:	
ADOPTED DATE:	4/14/04

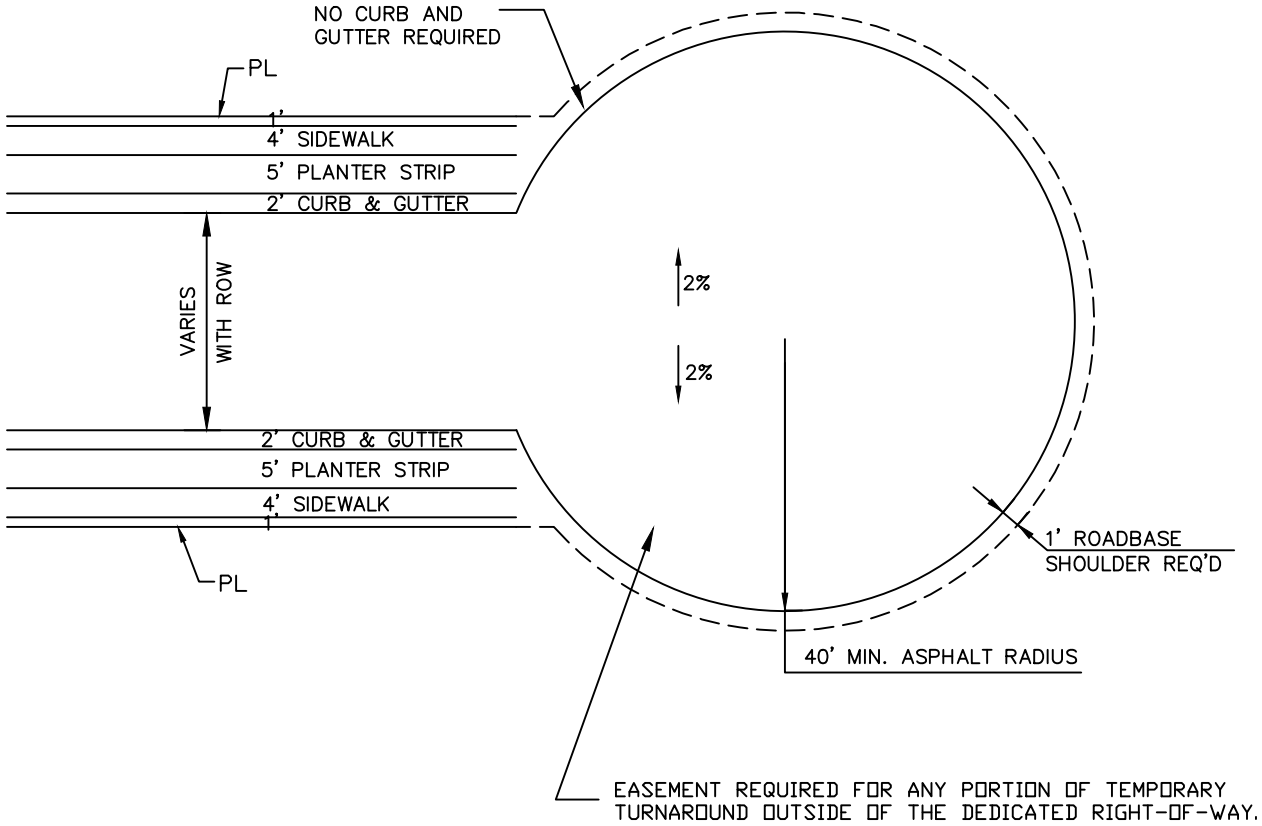

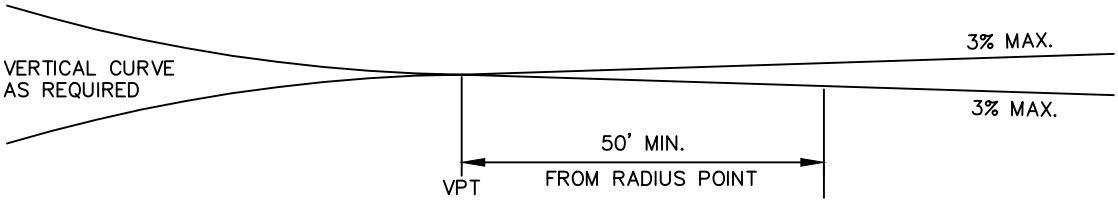

GENERAL CONSTRUCTION NOTES:

1. SUBGRADE SHALL CONFORM TO CITY CONSTRUCTION STANDARDS, SEE STREET CROSS SECTION DETAIL 1.
2. 8" MIN. CRUSHED GRAVEL BASE COURSE.
3. 3" MIN. COMPACTED PLANT MIX ASPHALT SURFACING.

TEMPORARY TURNAROUND

NTS

STATEMENT OF USE

THIS DOCUMENT AND ANY ILLUSTRATIONS HEREON ARE PROVIDED AS STANDARD CONSTRUCTION DETAILS WITHIN ALPINE CITY. DEVEATION FROM THIS DOCUMENT REQUIRES APPROVAL OF ALPINE CITY, ALPINE CITY CORPRTATION CAN NOT BE HELD LIABLE FOR MISSUSE OR CHANGES REGARDING THIS DOCUMENT.

REVISION

NO.		BY	APRL	DATE

ALPINE CITY
ESTABLISHED 1850

CAD FILE: E:\ENGINEERING\STANDARD DRAWINGS\2015 UPDATED (CURRENT)\10 TEMPORARY TURNAROUND

TEMPORARY TURNAROUND

ALPINE CITY
20 NORTH MAIN
ALPINE, UT 84004

STANDARD DRAWING NUMBER: 10

PLOT SCALE:	N.T.S.
DRAWN BY:	BDB
DESIGN BY:	
CHECKED BY:	
ADOPTED DATE:	10/18/05

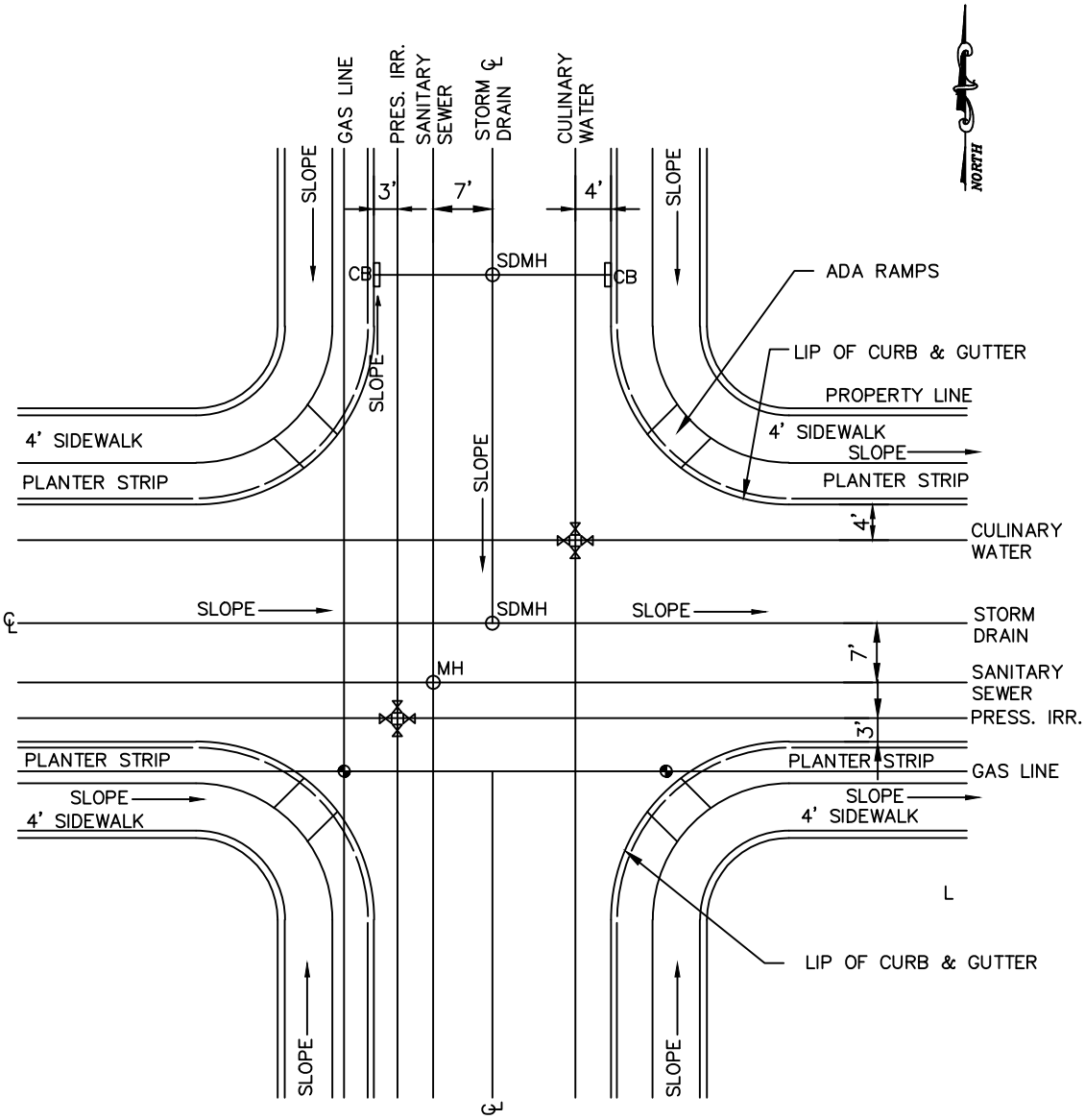

STANDARD STREET INTERSECTION AND UTILITY LOCATION

N.T.S.

STATEMENT OF USE

THIS DOCUMENT AND ANY ILLUSTRATIONS HEREON ARE PROVIDED AS STANDARD CONSTRUCTION DETAILS WITHIN ALPINE CITY. DEVEATION FROM THIS DOCUMENT REQUIRES APPROVAL OF ALPINE CITY, ALPINE CITY CORPRTATION CAN NOT BE HELD LIABLE FOR MISSUSE OR CHANGES REGARDING THIS DOCUMENT.

REVISION

NO.		BY	APRL	DATE

ALPINE CITY
ESTABLISHED 1850

CAD FILE: D:\ENGINEERING\STANDARD DRAWINGS\2005 UPDATED\11 INTERSECTION AND UTILITY LOCATION

STANDARD STREET INTERSECTION AND UTILITY LOCATION

ALPINE CITY
20 NORTH MAIN
ALPINE, UT 84004

STANDARD DRAWING NUMBER:	11
PLOT SCALE:	N.T.S.
DRAWN BY:	BDB
DESIGN BY:	
CHECKED BY:	
ADOPTED DATE:	10/13/05

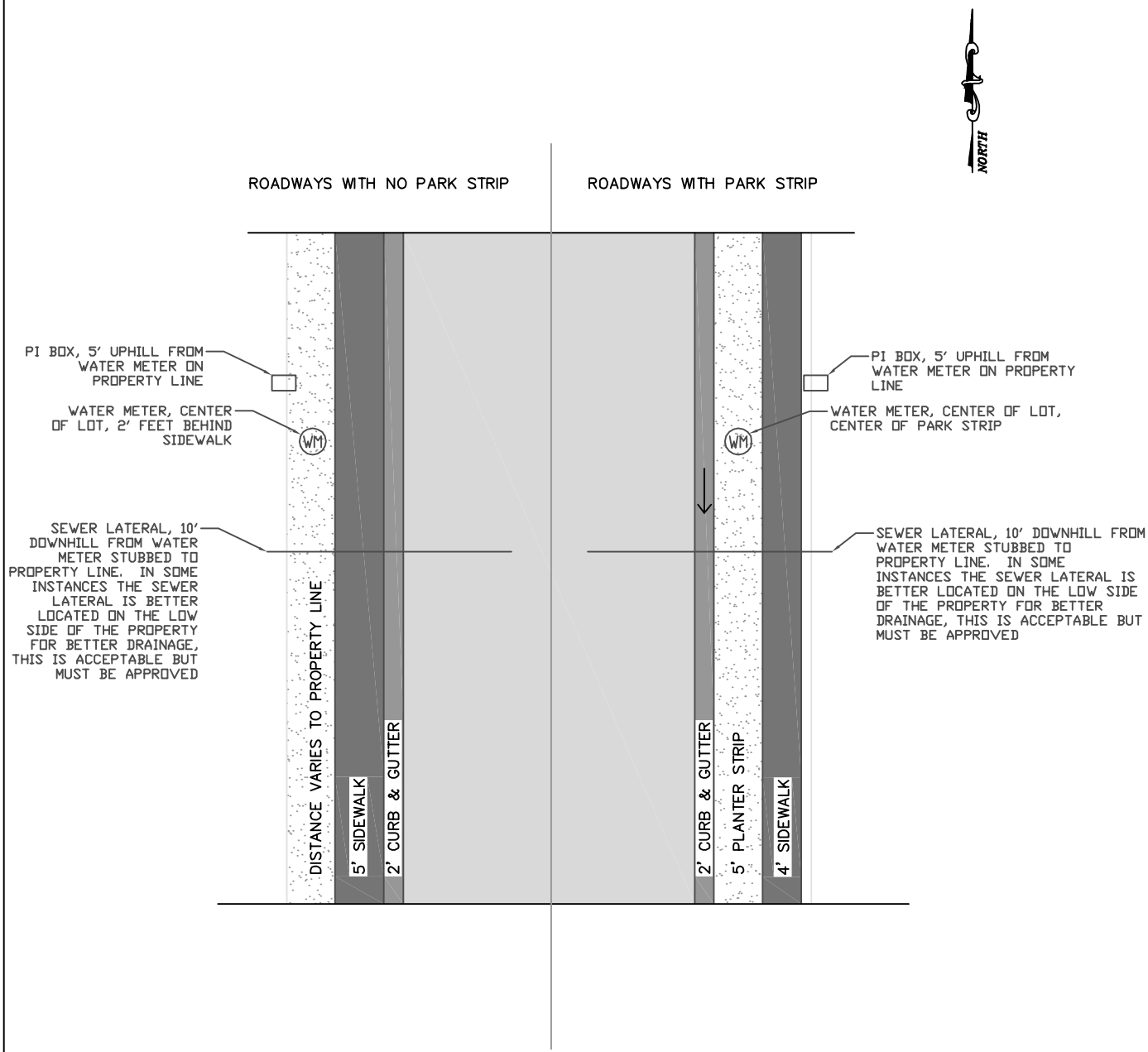

STANDARD LOT UTILITY LOCATIONS

N.T.S.

STATEMENT OF USE

THIS DOCUMENT AND ANY ILLUSTRATIONS HEREON ARE PROVIDED AS STANDARD CONSTRUCTION DETAILS WITHIN ALPINE CITY. DEVEATION FROM THIS DOCUMENT REQUIRES APPROVAL OF ALPINE CITY, ALPINE CITY CORPRTATION CAN NOT BE HELD LIABLE FOR MISSUSE OR CHANGES REGARDING THIS DOCUMENT.

REVISION

NO.		BY	APRL	DATE

ALPINE CITY
ESTABLISHED 1850

CAD FILE: B:\ENGINEERING\STANDARD DRAWINGS\2015 UPDATED\12 LOT UTILITY LOCATIONS

STANDARD LOT UTILITY LOCATIONS

ALPINE CITY
20 NORTH MAIN
ALPINE, UT 84004

STANDARD DRAWING NUMBER: 12

PLOT SCALE:	N.T.S.
DRAWN BY:	BDB
DESIGN BY:	
CHECKED BY:	
ADOPTED DATE:	10/13/05

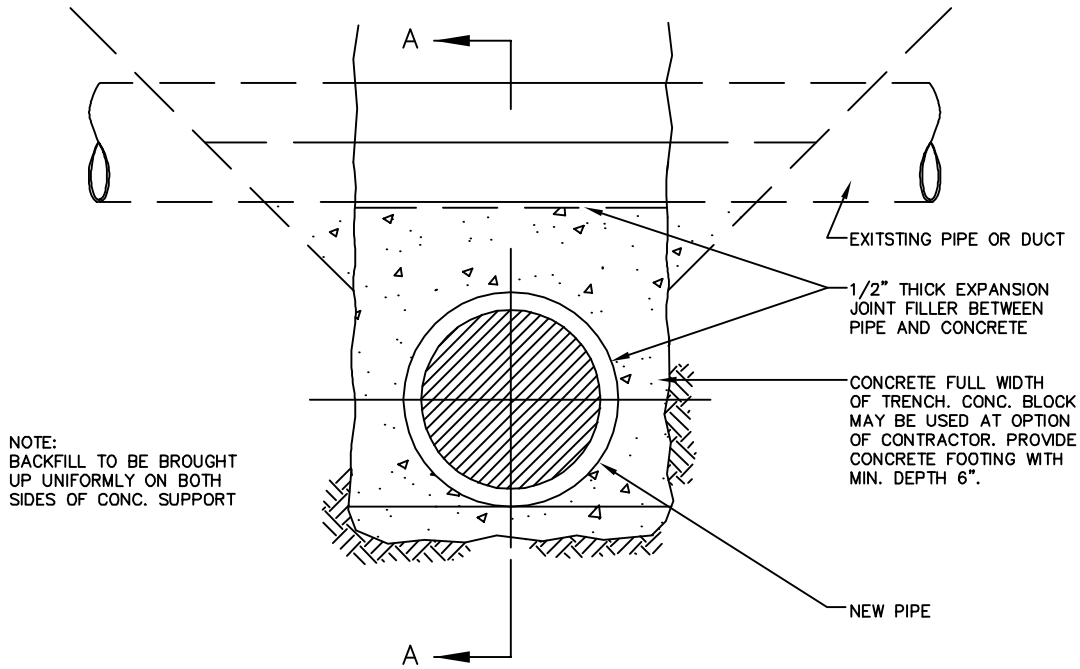

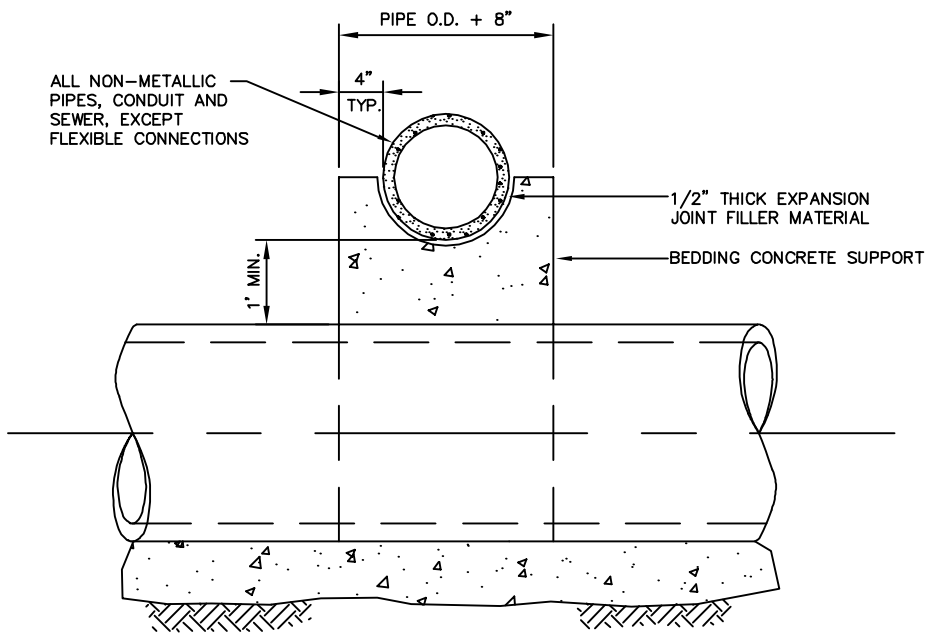

SECTION A-A

UTILITY CONFLICT

N.T.S.

STATEMENT OF USE

THIS DOCUMENT AND ANY ILLUSTRATIONS HEREON ARE PROVIDED AS STANDARD CONSTRUCTION DETAILS WITHIN ALPINE CITY. DEVEATION FROM THIS DOCUMENT REQUIRES APPROVAL OF ALPINE CITY, ALPINE CITY CORPRTATION CAN NOT BE HELD LIABLE FOR MISSUSE OR CHANGES REGARDING THIS DOCUMENT.

REVISION

NO.		BY	APRL	DATE

ALPINE CITY
ESTABLISHED 1850

CAD FILE: E:\ENGINEERING\STANDARD DRAWINGS\2015 UPDATED\13 UTILCF

UTILITY CONFLICT

ALPINE CITY
20 NORTH MAIN
ALPINE, UT 84004

STANDARD DRAWING NUMBER:	13
PLOT SCALE:	N.T.S.
DRAWN BY:	WJM
DESIGN BY:	
CHECKED BY:	
ADOPTED DATE:	4/14/04

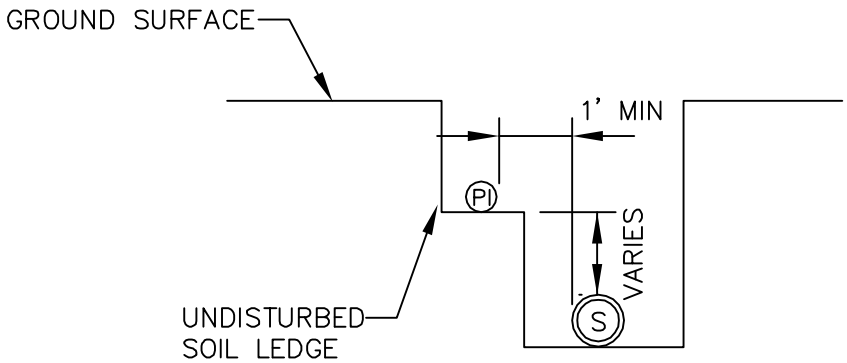

NOTE:
ALL PLUMBING PRACTICES SHALL CONFORM TO THE PLUMBING CODE ADOPTED BY ALPINE CITY

SEWER & PI LATERALS IN COMMON TRENCH

N.T.S.

STATEMENT OF USE

THIS DOCUMENT AND ANY ILLUSTRATIONS HEREON ARE PROVIDED AS STANDARD CONSTRUCTION DETAILS WITHIN ALPINE CITY. DEVEATION FROM THIS DOCUMENT REQUIRES APPROVAL OF ALPINE CITY, ALPINE CITY CORPRTATION CAN NOT BE HELD LIABLE FOR MISSUSE OR CHANGES REGARDING THIS DOCUMENT.

REVISION

NO.		BY	APRL	DATE

ALPINE CITY
ESTABLISHED 1850

CAD FILE: D:\ENGINEERING\STANDARD DRAWINGS\2010 UPDATED\14 UTILITIES IN SAME TRENCH

CITY UTILITY LATERALS IN SAME TRENCH

ALPINE CITY
20 NORTH MAIN
ALPINE, UT 84004

STANDARD DRAWING NUMBER: 14

PLOT SCALE:	N.T.S.
DRAWN BY:	WJM
DESIGN BY:	
CHECKED BY:	
ADOPTED DATE:	4/14/04

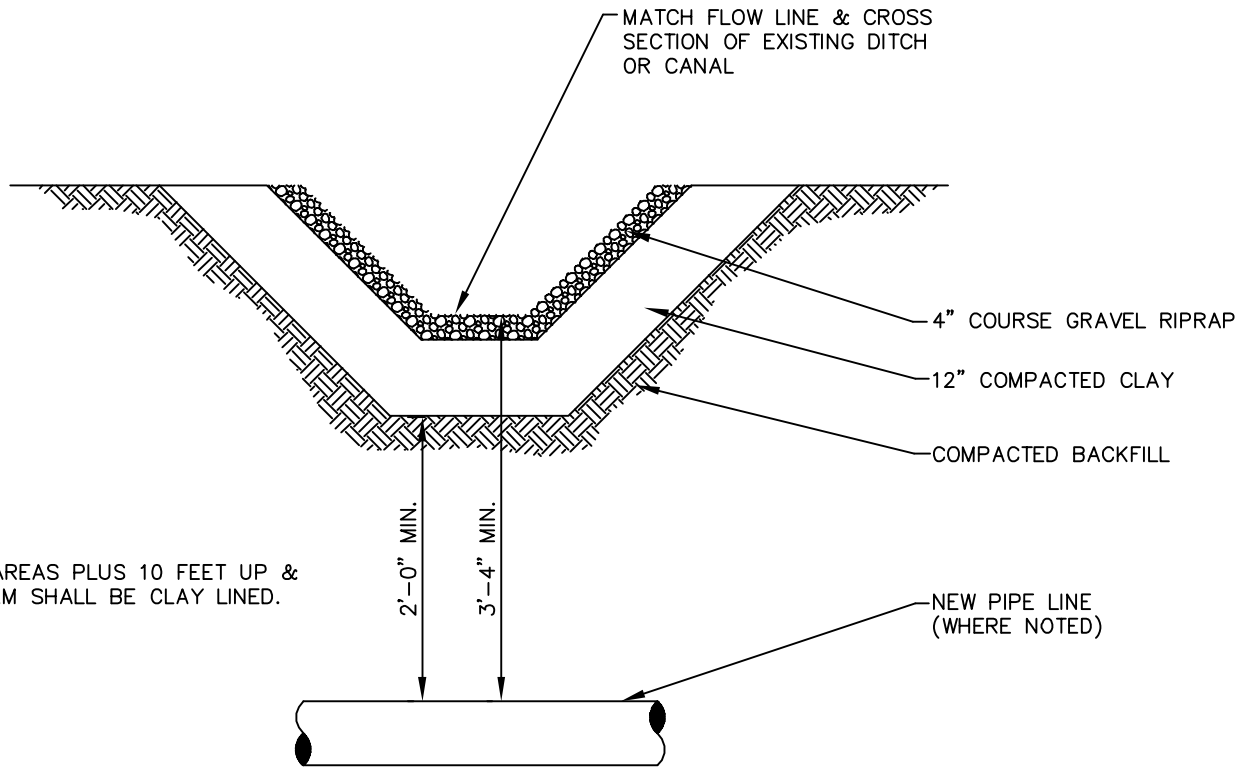

NOTE:
DISTURBED AREAS PLUS 10 FEET UP & DOWN STREAM SHALL BE CLAY LINED.

DITCH CROSSING

N.T.S.

STATEMENT OF USE

THIS DOCUMENT AND ANY ILLUSTRATIONS HEREON ARE PROVIDED AS STANDARD CONSTRUCTION DETAILS WITHIN ALPINE CITY. DEVEATION FROM THIS DOCUMENT REQUIRES APPROVAL OF ALPINE CITY, ALPINE CITY CORPRTATION CAN NOT BE HELD LIABLE FOR MISSUSE OR CHANGES REGARDING THIS DOCUMENT.

REVISION

NO.		BY	APRL	DATE

ALPINE CITY
ESTABLISHED 1850

CAD FILE: E:\ENGINEERING\STANDARD DRAWINGS\2015 UPDATED\15 DITCH CROSSING

DITCH CROSSING

ALPINE CITY
20 NORTH MAIN
ALPINE, UT 84004

STANDARD DRAWING NUMBER:	15
PLOT SCALE:	N.T.S.
DRAWN BY:	WJM
DESIGN BY:	
CHECKED BY:	
ADOPTED DATE:	4/14/04

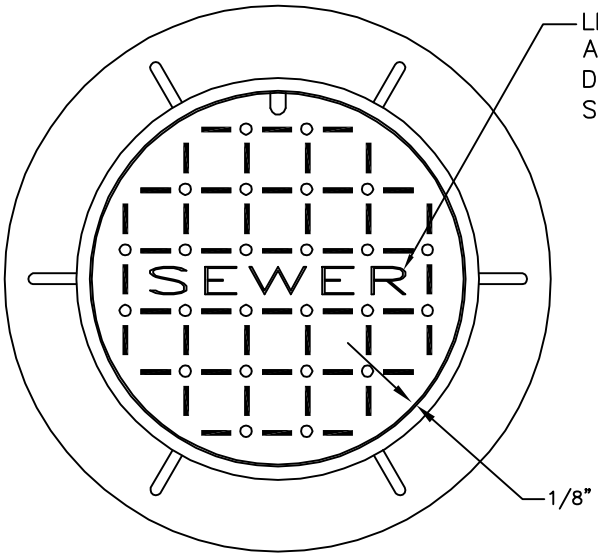

PLAN OF COVER AND RING

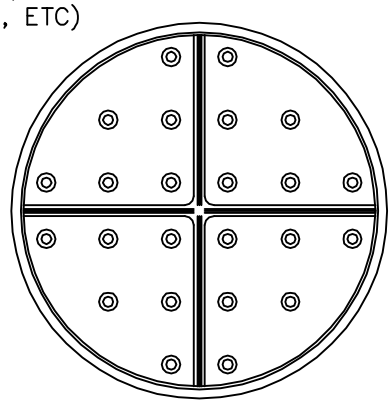

BOTTOM VIEW OF COVER

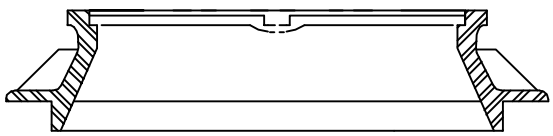

SECTIONS

D&L A-1180 OR APPROVED EQUAL

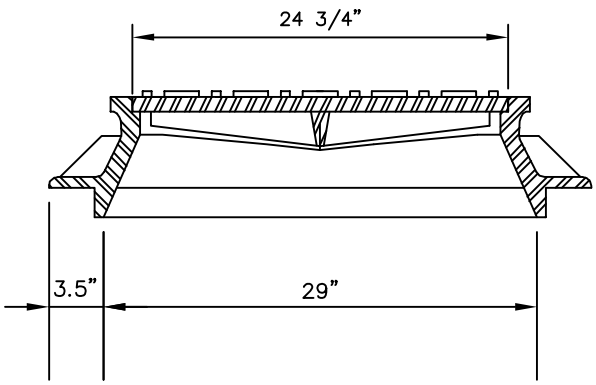

HEAVY DUTY, 400 LB. MINIMUM, MANHOLE RING AND COVER

N.T.S.

STATEMENT OF USE

THIS DOCUMENT AND ANY ILLUSTRATIONS HEREON ARE PROVIDED AS STANDARD CONSTRUCTION DETAILS WITHIN ALPINE CITY. DEVEATION FROM THIS DOCUMENT REQUIRES APPROVAL OF ALPINE CITY, ALPINE CITY CORPRTATION CAN NOT BE HELD LIABLE FOR MISSUSE OR CHANGES REGARDING THIS DOCUMENT.

REVISION

NO.		BY	APRL	DATE

ALPINE CITY
ESTABLISHED 1850

CAD FILE: D:\ENGINEERING\STANDARD DRAWINGS\2015 UPDATED\16 TYPICAL MANHOLE RING & COVER

MANHOLE RING & COVER (typical)

ALPINE CITY
20 NORTH MAIN
ALPINE, UT 84004

STANDARD DRAWING NUMBER:	16
PLOT SCALE:	N.T.S.
DRAWN BY:	WJM
DESIGN BY:	
CHECKED BY:	
ADOPTED DATE:	4/14/04

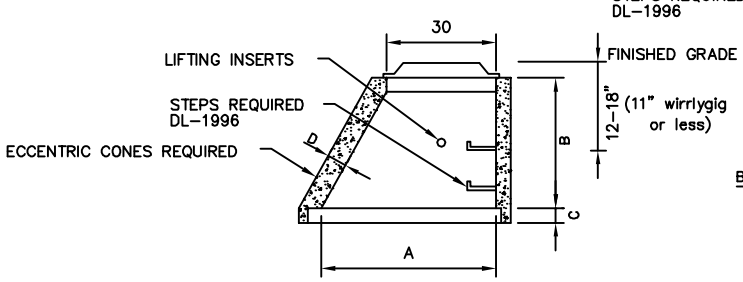

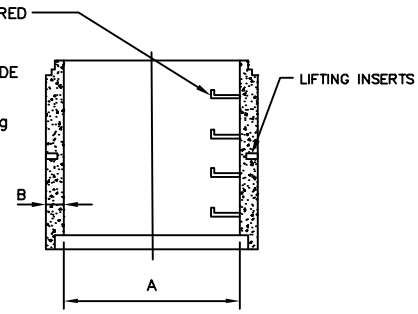

SIZE A (INCHES)	HEIGHT B (INCHES)	FLANGE C (INCHES)	WALL D (INCHES)	WEIGHT (LBS. EA.)
48	36	4	5	2720
60	39	6	6	4300

USE 5' DIA. MIN. FOR ALL PIPE 14" & LARGER USE 4' MIN. DIA. FOR ALL PIPE UP TO AND INCLUDING 12" DIA. UNLESS 3 OR ENTER THE MANHOLE. FOR ALL MANHOLES 15' OR DEPTH FROM RIM TO INV., USE 5' DIA. MANHOLE.

SIZE A (INCHES)	WALL B (INCHES)	WEIGHT (LBS. EA.)
48	5	900
60	6	1380

DROP PIPE INSTALLED IN CONCRETE

*NOTE:
MINIMUM AS DIRECTED BY CITY ENGINEER

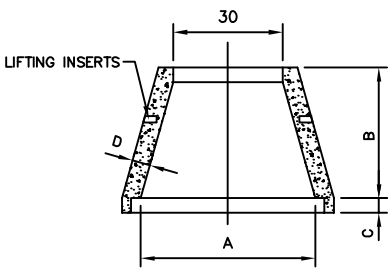

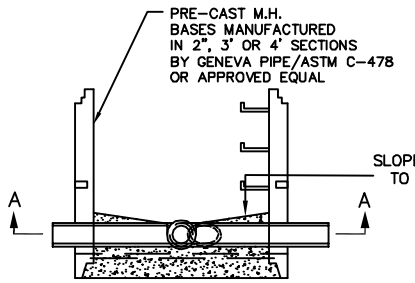

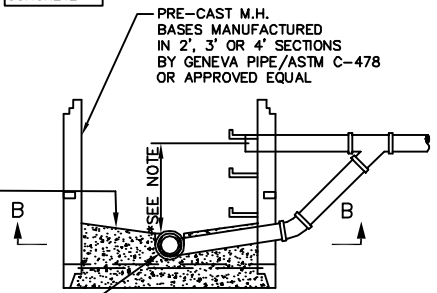

PRESEAL OR FORSHEDA GASKET SYSTEM. LINE AND GRADE AS SHOWN ON PROJECT PLAN.

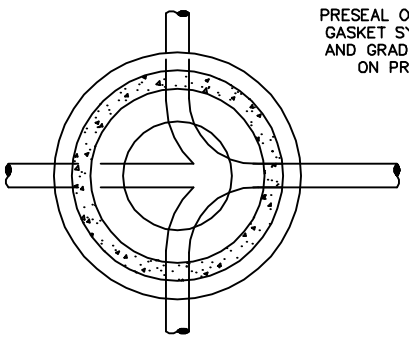

SECTION A–A

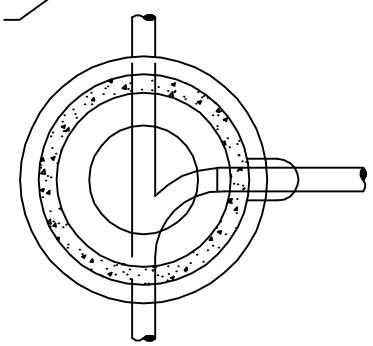

SECTION B–B

TYPICAL JUNCTION MANHOLE

N.T.S.

TYPICAL DROP MANHOLE

N.T.S.

NOTE: USE OF DROP MANHOLES REQUIRES APPROVAL OF CITY ENGINEER AND PUBLIC WORKS DIRECTOR. FOR ALL OTHER SPECIFICATIONS, SEE APWA.

STATEMENT OF USE

THIS DOCUMENT AND ANY ILLUSTRATIONS HEREON ARE PROVIDED AS STANDARD CONSTRUCTION DETAILS WITHIN ALPINE CITY. DEVEATION FROM THIS DOCUMENT REQUIRES APPROVAL OF ALPINE CITY, ALPINE CITY CORPRTATION CAN NOT BE HELD LIABLE FOR MISSUSE OR CHANGES REGARDING THIS DOCUMENT.

REVISION

NO.		BY	APRL	DATE

ALPINE CITY
ESTABLISHED 1850

CAD FILE: E:\ENGINEERING\STANDARD DRAWINGS\2015 UPDATED (CURRENT)\17 SEWER TYPICAL MANHOLES

SEWER MANHOLE (TYPICAL)

ALPINE CITY
20 NORTH MAIN
ALPINE, UT 84004

STANDARD DRAWING NUMBER:	17
PLOT SCALE:	N.T.S.
DRAWN BY:	WJM
DESIGN BY:	
CHECKED BY:	
ADOPTED DATE:	4/14/04

NOTES:

1. A CLEANOUT IS REQUIRED NEXT TO THE BUILDING.
2. ADDITIONAL CLEANOUTS REQUIRED BETWEEN THE BUILDING AND SEWER MAIN AT MAXIMUM 100 FOOT INTERVALS.
3. THE COMBO SHALL CONSIST OF CAST IRON, ABS MATERIAL (OR WHITE SCH40 DWV) FOR RISER.
4. FERNCO COUPLERS (AS SHOWN) SHALL BE USED WHEN CONNECTING CAST IRON TO RISER OR SDR-35 LATERAL PIPE.
5. ALL CLEANOUTS SHALL HAVE CAST IRON CAPS.
6. ALL SEWER LATERALS SHALL BE SDR-35 PIPE, BEING LAID WITH THE BELL END OF THE PIPE IN THE UP HILL DIRECTION.
7. ALL SEWER LATERALS SHALL BE BEDDED WITH 3/4" MINUS GRAVEL.
8. BACKFILL MATERIAL SHALL BE ENGINEERED FILL WITHIN CITY RIGHT OF WAYS, AS CLASSIFIED IN ALPINE CITY STANDARDS AND SPECIFICATIONS.
9. BACKFILL MATERIAL AROUND PIPE SHALL BE COMPACTED TO 95% OF DENSITY AS MEASURED BY AASHTO T-99.
10. SEWER LATERAL MUST BE INSPECTED BY AN AUTHORIZED REPRESENTATIVE OF THE CITY PRIOR TO BACKFILLING TRENCH.
11. A TIE SKETCH SHOWING THE LOCATION OF ALL SEWER LATERALS MUST BE SUBMITTED TO THE CITY.
12. THE CITY SHALL BE NOTIFIED 24 HOURS PRIOR TO WHEN A SEWER LATERAL INSPECTION IS NEEDED.
13. ALL APPROPRIATE EXCAVATION PERMITS MUST BE OBTAINED FROM THE CITY AND OTHER AGENCY PRIOR TO ANY EXCAVATION.
14. ALL APPROPRIATE IMPACT FEES MUST BE PAID PRIOR TO CONNECTING TO THE SEWER.
15. MARK END OF LATERAL STUB WITH 2x4 POST PAINTED GREEN. ALL OTHER MARKERS MUST BE PRE-APPROVED PRIOR TO USE.

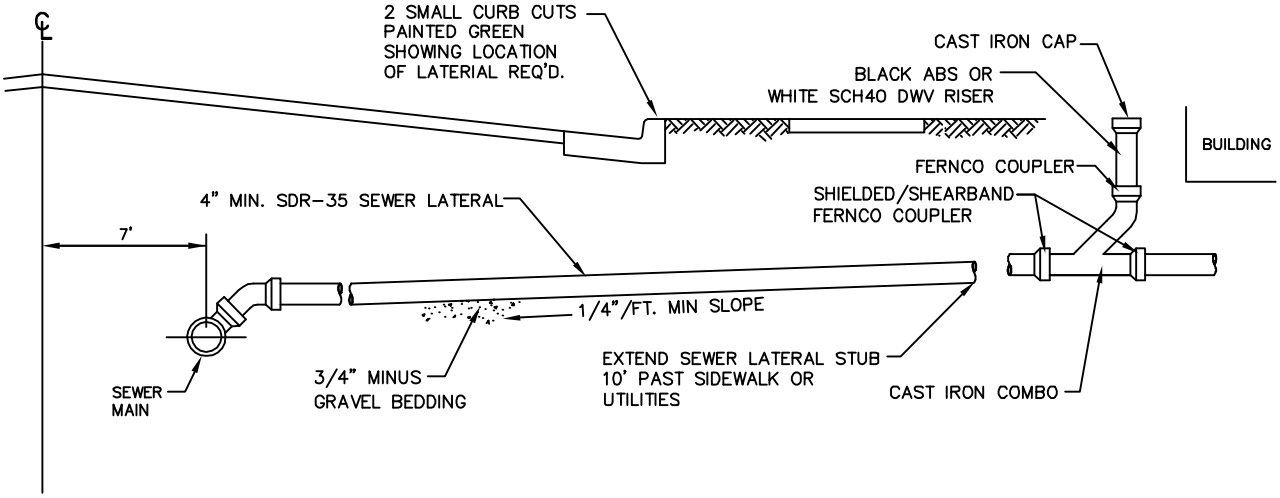

TYPICAL SEWER SERVICE CONN.

N.T.S.

STATEMENT OF USE

THIS DOCUMENT AND ANY ILLUSTRATIONS HEREON ARE PROVIDED AS STANDARD CONSTRUCTION DETAILS WITHIN ALPINE CITY. DEVEATION FROM THIS DOCUMENT REQUIRES APPROVAL OF ALPINE CITY, ALPINE CITY CORPRTATION CAN NOT BE HELD LIABLE FOR MISSUSE OR CHANGES REGARDING THIS DOCUMENT.

REVISION

NO.		BY	APRL	DATE

ALPINE CITY
ESTABLISHED 1850

CAD FILE:

TYPICAL SEWER SERVICE CONN.

ALPINE CITY
20 NORTH MAIN
ALPINE, UT 84004

STANDARD DRAWING NUMBER: 17a

PLOT SCALE:	N.T.S.
DRAWN BY:	WJM
DESIGN BY:	
CHECKED BY:	
ADOPTED DATE:	4/14/04

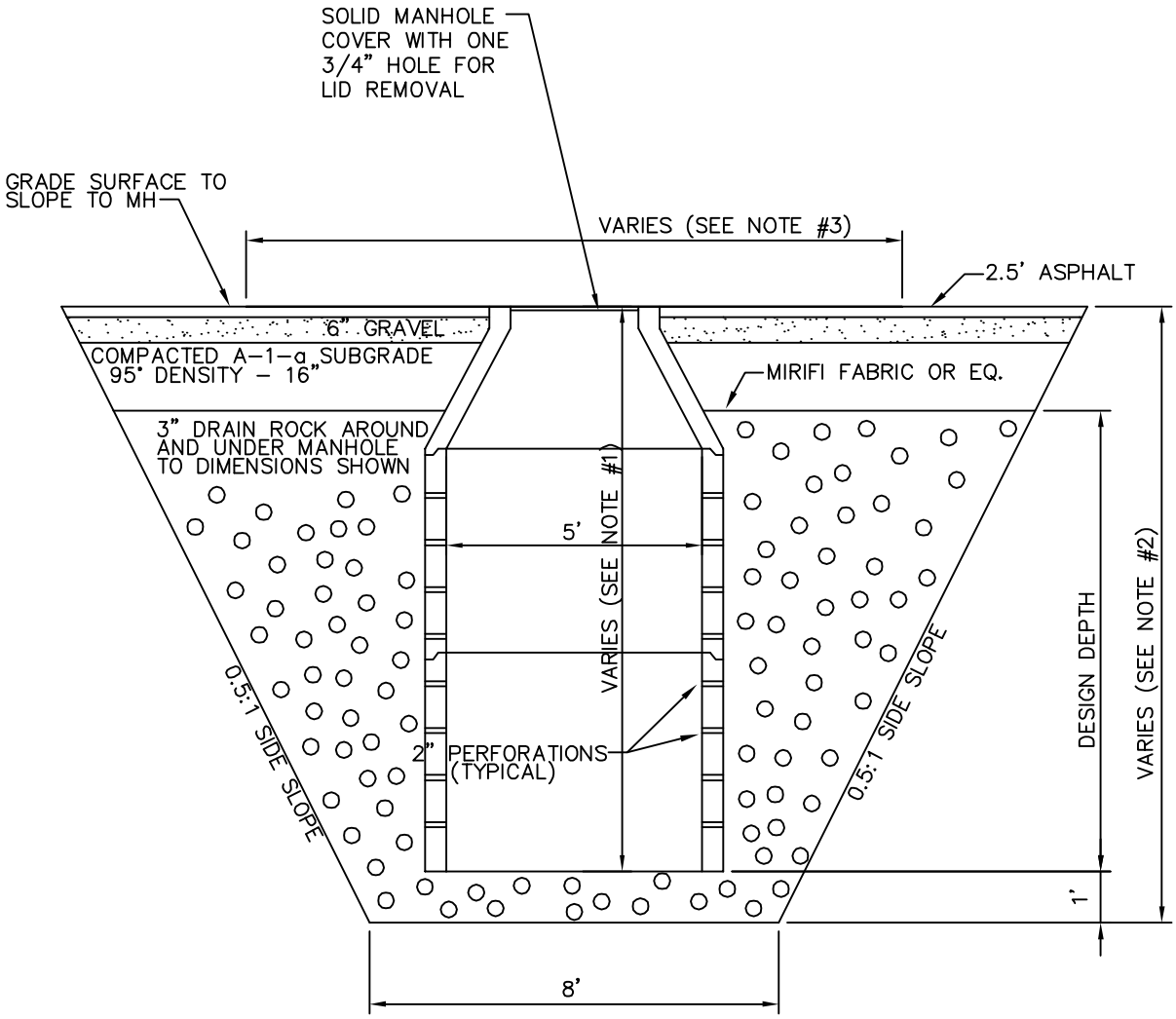

NOTES:
#1. DESIGN DEPTH + 2'
#2. DESIGN DEPTH + 3'
#3. DESIGN DEPTH + 11'

STORM DRAINAGE SUMP

N.T.S.

STATEMENT OF USE

THIS DOCUMENT AND ANY ILLUSTRATIONS HEREON ARE PROVIDED AS STANDARD CONSTRUCTION DETAILS WITHIN ALPINE CITY. DEVEATION FROM THIS DOCUMENT REQUIRES APPROVAL OF ALPINE CITY, ALPINE CITY CORPRTATION CAN NOT BE HELD LIABLE FOR MISSUSE OR CHANGES REGARDING THIS DOCUMENT.

REVISION

NO.		BY	APRL	DATE

ALPINE CITY
ESTABLISHED 1850

CAD FILE: E:\ENGINEERING\STANDARD DRAWINGS\2015 UPDATED (CURRENT)\18 STMSUMP

TYPICAL STORM DRAINAGE SUMP

ALPINE CITY
20 NORTH MAIN
ALPINE, UT 84004

STANDARD DRAWING NUMBER:	18
PLOT SCALE:	N.T.S.
DRAWN BY:	WJM
DESIGN BY:	
CHECKED BY:	
ADOPTED DATE:	4/14/04

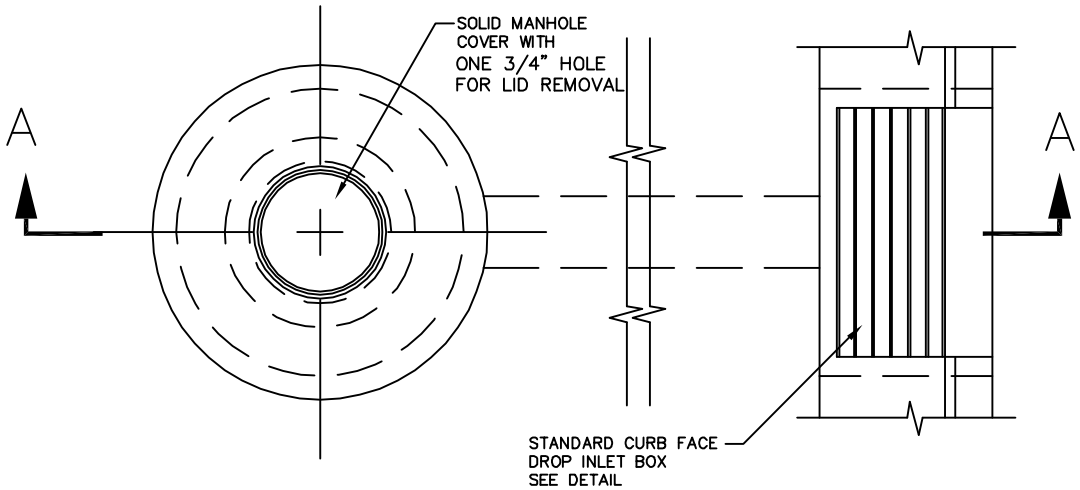

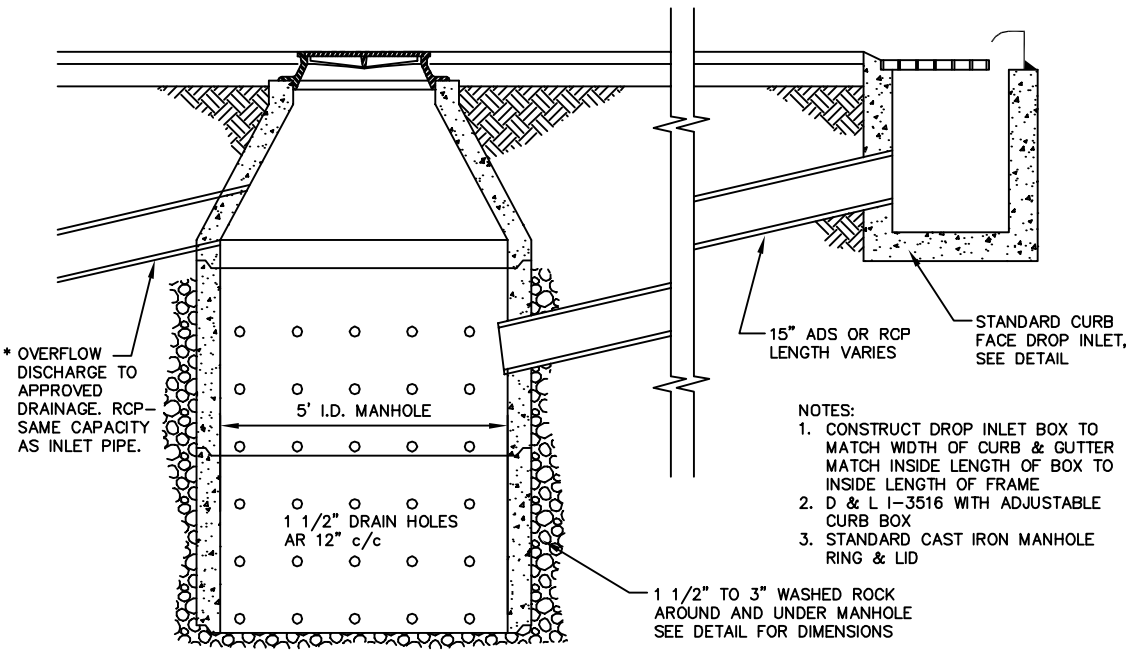

NOTES:
1. CONSTRUCT DROP INLET BOX TO MATCH WIDTH OF CURB & GUTTER MATCH INSIDE LENGTH OF BOX TO INSIDE LENGTH OF FRAME
2. D & L I-3516 WITH ADJUSTABLE CURB BOX
3. STANDARD CAST IRON MANHOLE RING & LID

* MAY BE REQ'D BY CITY ENGINEER

SECTION A-A

SUMP DISPOSAL

N.T.S.

NOTE: ONLY ALLOWED IN CERTAIN CIRCUMSTANCES. PRE-TREATMENT REQ'D

STATEMENT OF USE

THIS DOCUMENT AND ANY ILLUSTRATIONS HEREON ARE PROVIDED AS STANDARD CONSTRUCTION DETAILS WITHIN ALPINE CITY. DEVEATION FROM THIS DOCUMENT REQUIRES APPROVAL OF ALPINE CITY, ALPINE CITY CORPRTATION CAN NOT BE HELD LIABLE FOR MISSUSE OR CHANGES REGARDING THIS DOCUMENT.

REVISION

NO.		BY	APRL	DATE

ALPINE CITY
ESTABLISHED 1850

CAD FILE: E:\ENGINEERING\STANDARD DRAWINGS\2015 UPDATED\19 SMPDISP

SUMP DISPOSAL
(Typical)

ALPINE CITY
20 NORTH MAIN
ALPINE, UT 84004

STANDARD DRAWING NUMBER:	19
PLOT SCALE:	N.T.S.
DRAWN BY:	WJM
DESIGN BY:	
CHECKED BY:	
ADOPTED DATE:	4/14/04

NOTE:
#4 REBAR SPACED AT
A MINIMUM OF 12" O.C. HORIZ.
AND 8" O.C. VERTICAL.
14" OVERLAP OR REBAR
REQUIRED.

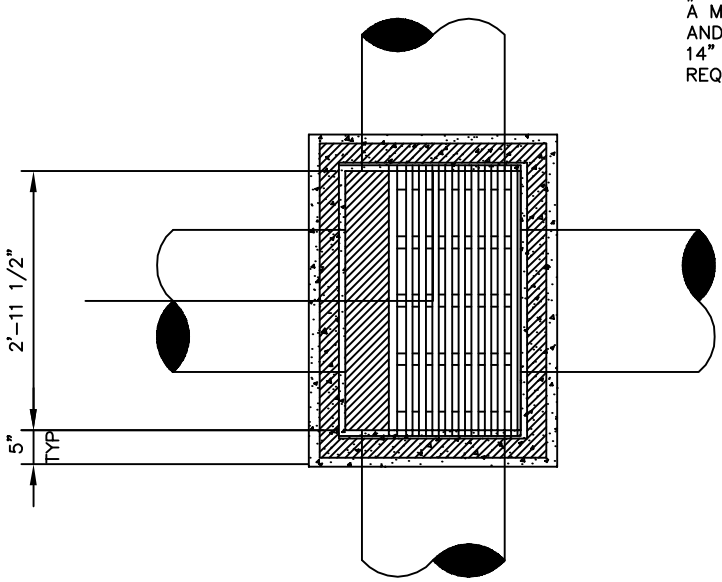

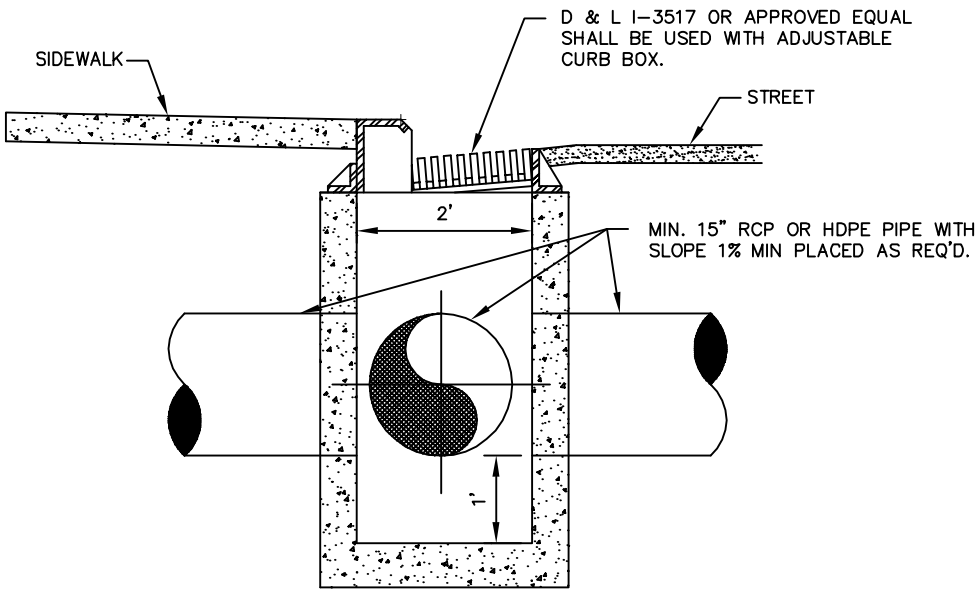

CURB FACE DROP INLET BOX

N.T.S.

STATEMENT OF USE

THIS DOCUMENT AND ANY ILLUSTRATIONS HEREON ARE PROVIDED AS STANDARD CONSTRUCTION DETAILS WITHIN ALPINE CITY. DEVEATION FROM THIS DOCUMENT REQUIRES APPROVAL OF ALPINE CITY, ALPINE CITY CORPRTATION CAN NOT BE HELD LIABLE FOR MISSUSE OR CHANGES REGARDING THIS DOCUMENT.

REVISION

NO.		BY	APRL	DATE

ALPINE CITY
ESTABLISHED 1850

CAD FILE: E:\ENGINEERING\STANDARD DRAWINGS\2015 UPDATED\20 DROPINLT

CURB FACE DROP INLET BOX (Typical)

ALPINE CITY
20 NORTH MAIN
ALPINE, UT 84004

STANDARD DRAWING NUMBER:	20
PLOT SCALE:	N.T.S.
DRAWN BY:	WJM
DESIGN BY:	
CHECKED BY:	
ADOPTED DATE:	4/14/04

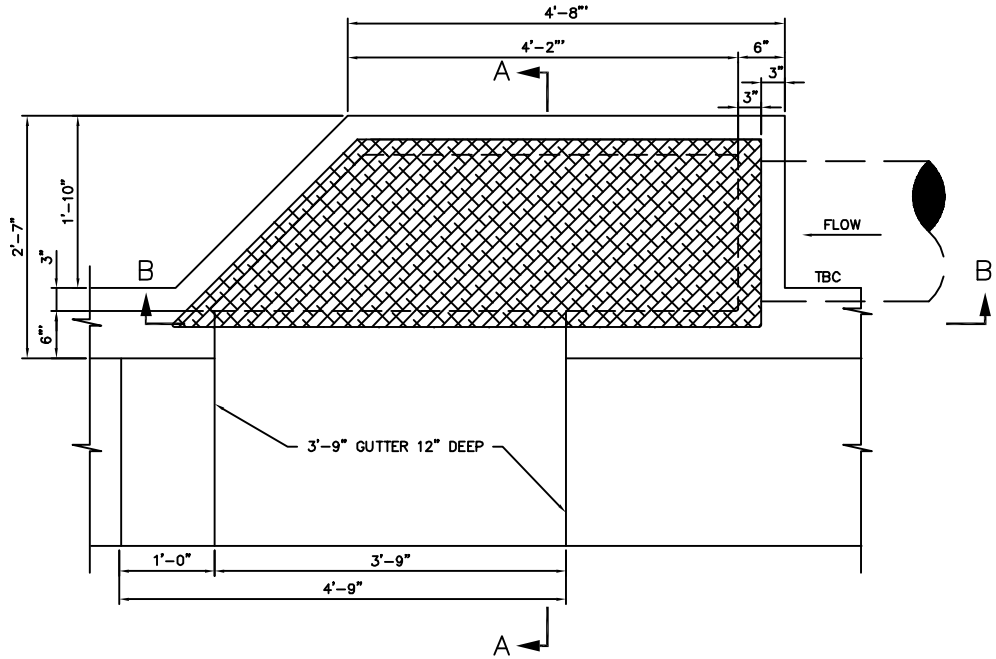

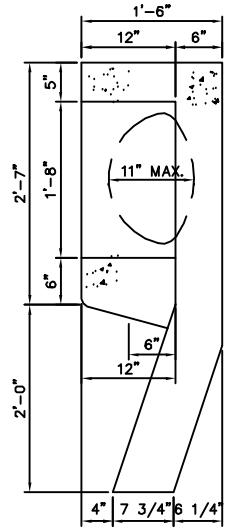

SECTION A-A

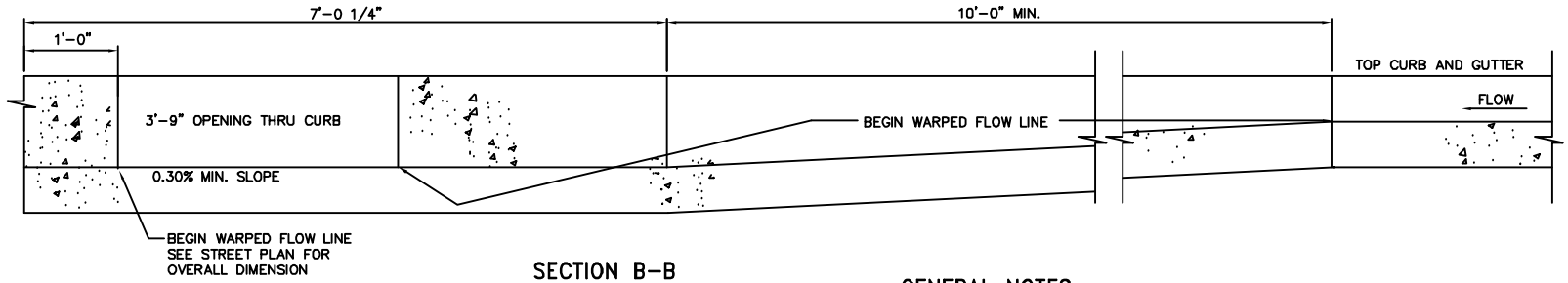

SECTION B-B

GENERAL NOTES

1. ALL MATERIALS, CONSTRUCTION, AND WORKMANSHIP SHALL BE IN ACCORDANCE WITH ALPINE CITY SPECIFICATIONS AND AS DIRECTED BY THE ALPINE CITY ENGINEER OR HIS REPRESENT.
2. ALL CONCRETE TO BE 4000 P.S.I. @ 28 DAYS.
3. UNDER CONDITIONS WHERE PIPE SIZE, PIPE TYPE, OR EARTH COVER IS CRITICAL USE MODIFIED OUTLET BOX.
4. 1/4" PLATE SHALL BE PLACED ON THE OULET AS A COVER. THE PLAT SHALL BE PAINTED GREY

DIPSTONE OUTLET

N.T.S.

STATEMENT OF USE

THIS DOCUMENT AND ANY ILLUSTRATIONS HEREON ARE PROVIDED AS STANDARD CONSTRUCTION DETAILS WITHIN ALPINE CITY. DEVEATION FROM THIS DOCUMENT REQUIRES APPROVAL OF ALPINE CITY, ALPINE CITY CORPRTATION CAN NOT BE HELD LIABLE FOR MISSUSE OR CHANGES REGARDING THIS DOCUMENT.

REVISION

NO.	BY	DATE
	APRIL	

ALPINE CITY
ESTABLISHED 1850

CAD FILE: E:\ENGINEERING\STANDARD DRAWINGS\2015 UPDATED\21 DIPSTONE OUTLET

DIPSTONE OUTLET

ALPINE CITY
20 NORTH MAIN
ALPINE, UT 84004

STANDARD DRAWING NUMBER: 21

PLOT SCALE:	N.T.S.
DRAWN BY:	WJM
DESIGN BY:	
CHECKED BY:	
ADOPTED DATE:	4/1/04

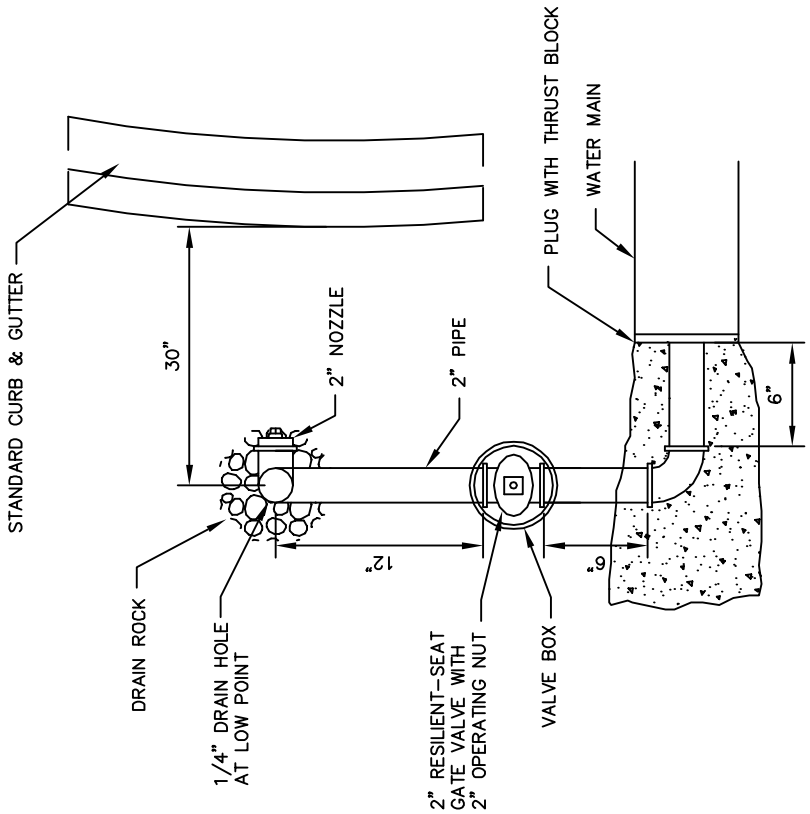

PLAN VIEW

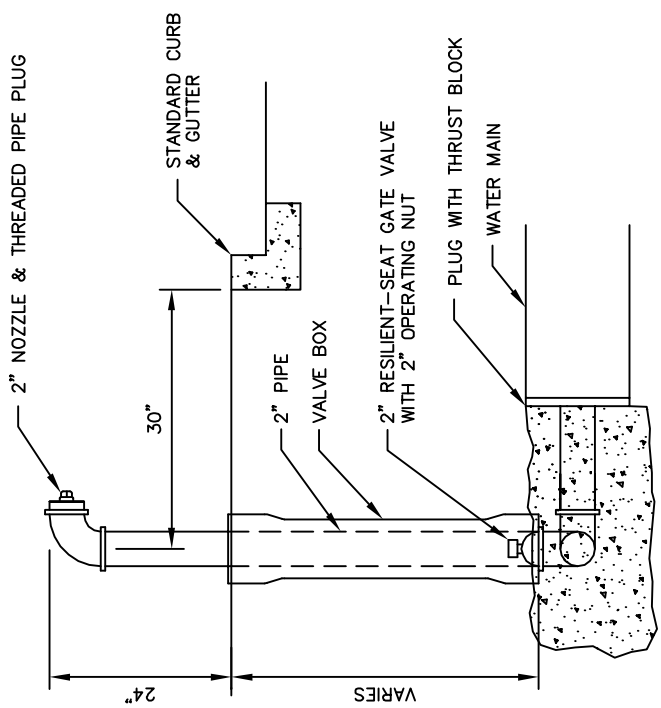

PROFILE

FLUSH VALVE

N.T.S.

STATEMENT OF USE

THIS DOCUMENT AND ANY ILLUSTRATIONS HEREON ARE PROVIDED AS STANDARD CONSTRUCTION DETAILS WITHIN ALPINE CITY. DEVEATION FROM THIS DOCUMENT REQUIRES APPROVAL OF ALPINE CITY, ALPINE CITY CORPRTATION CAN NOT BE HELD LIABLE FOR MISSUSE OR CHANGES REGARDING THIS DOCUMENT.

REVISION

NO.		BY	APRL	DATE

ALPINE CITY
ESTABLISHED 1850

CAD FILE: E:\ENGINEERING\STANDARD DRAWINGS\2015 UPDATED\22 FLUSHVAL

FLUSH VALVE (Typical)

ALPINE CITY
20 NORTH MAIN
ALPINE, UT 84004

STANDARD DRAWING NUMBER:	22
PLOT SCALE:	N.T.S.
DRAWN BY:	WJM
DESIGN BY:	
CHECKED BY:	
ADOPTED DATE:	4/14/04

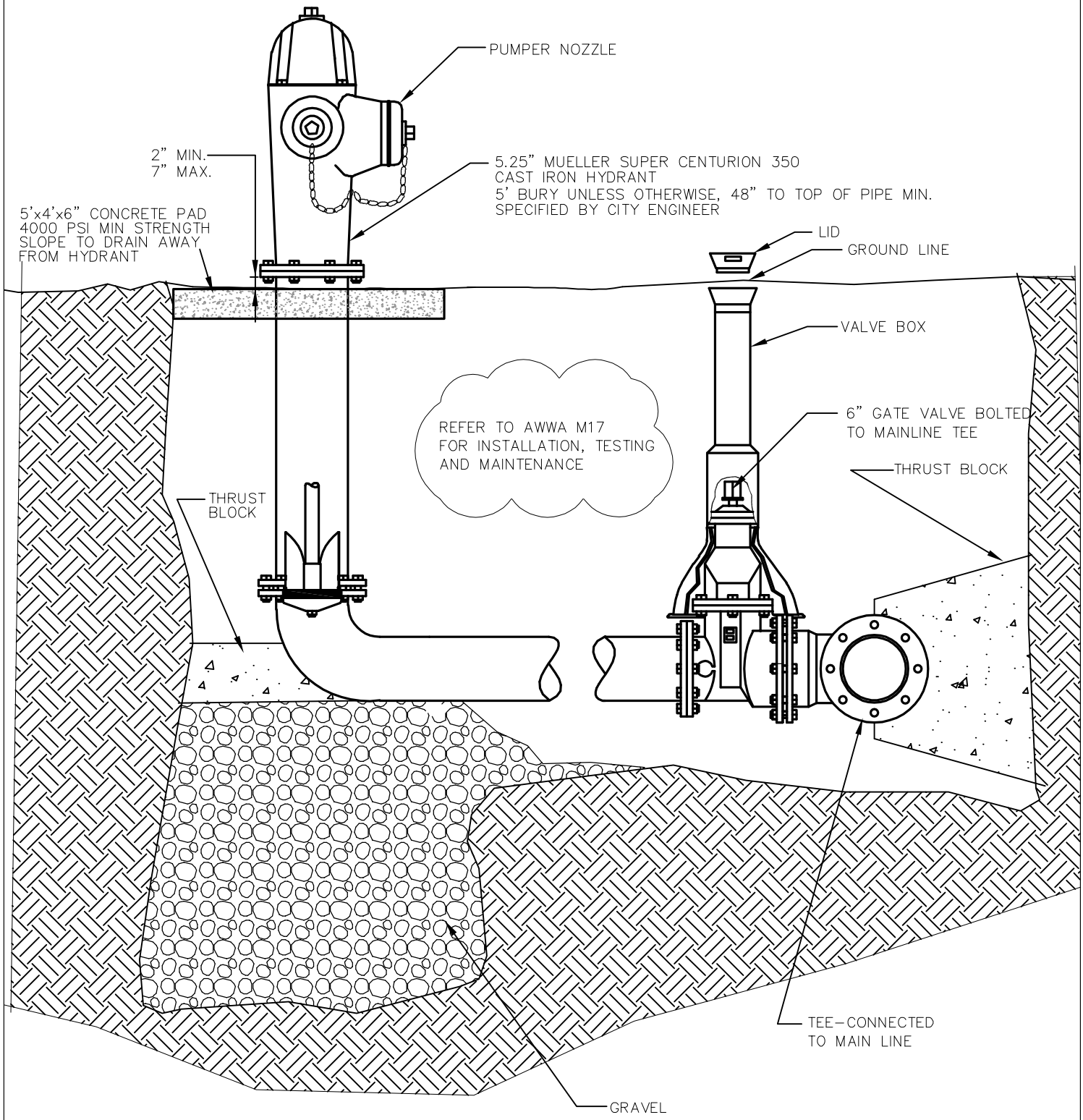

STANDARD FIRE HYDRANT DETAIL

N.T.S.

STATEMENT OF USE

THIS DOCUMENT AND ANY ILLUSTRATIONS HEREON ARE PROVIDED AS STANDARD CONSTRUCTION DETAILS WITHIN ALPINE CITY. DEVEATION FROM THIS DOCUMENT REQUIRES APPROVAL OF ALPINE CITY, ALPINE CITY CORPRTATION CAN NOT BE HELD LIABLE FOR MISSUSE OR CHANGES REGARDING THIS DOCUMENT.

REVISION

NO.		BY	APRL.	DATE

ALPINE CITY
ESTABLISHED 1850

CAD FILE: \engineering\standard drawings\2015 details\Std 18.dwg

TYPICAL FIRE HYDRANT

ALPINE CITY
20 NORTH MAIN
ALPINE, UT 84004

STANDARD DRAWING NUMBER:	23
PLOT SCALE:	N.T.S.
DRAWN BY:	WJM
DESIGN BY:	
CHECKED BY:	
ADOPTED DATE:	4/14/04

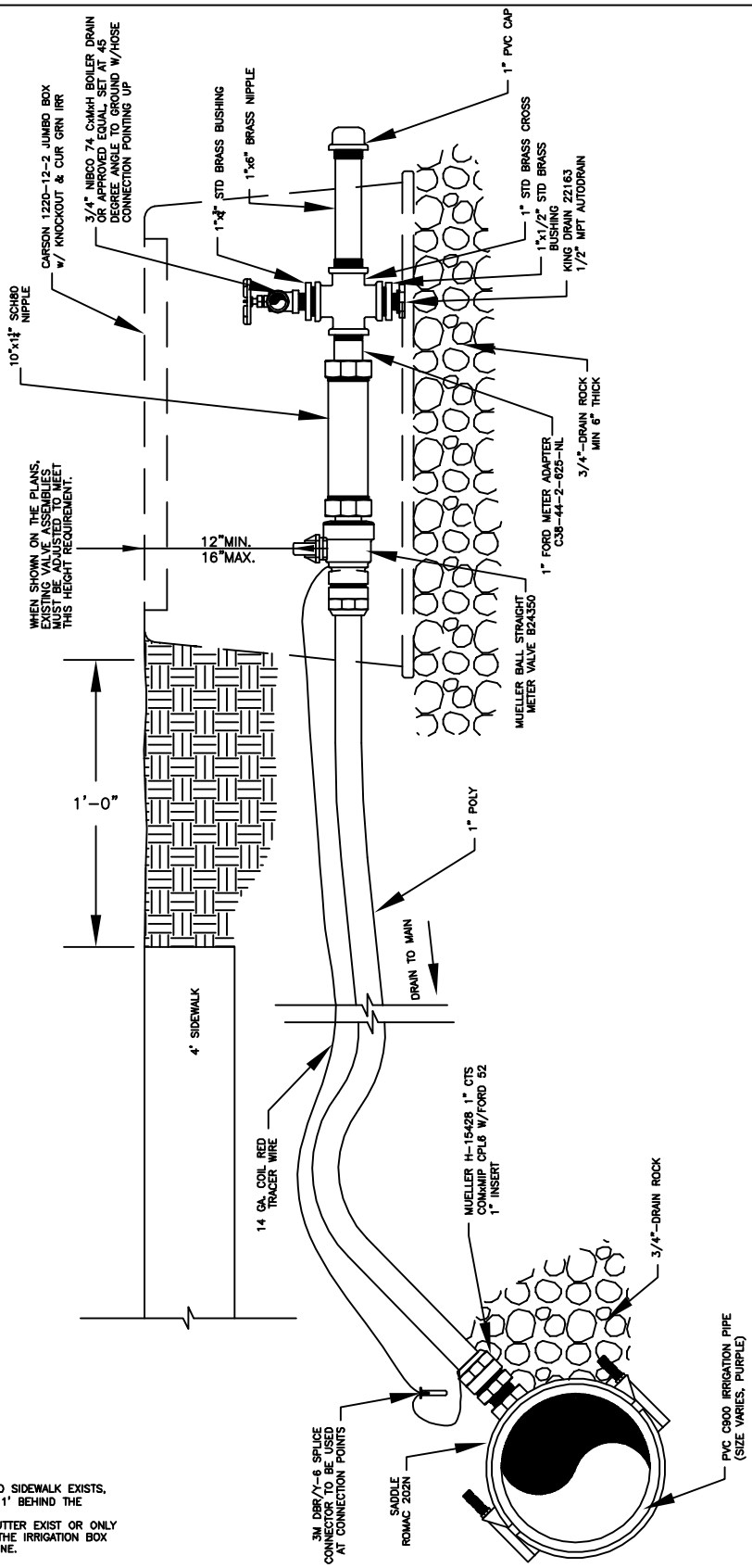

NOTES:

1. WHERE COMBINATION CURB, GUTTER, AND SIDEWALK EXISTS, THE IRRIGATION BOX SHALL BE PLACED 1' BEHIND THE SIDEWALK.
   IN LOCATIONS, WHERE NO CURB AND GUTTER EXIST OR ONLY CURB AND GUTTER WITHOUT SIDEWALK, THE IRRIGATION BOX SHALL BE PLACED ON THE PROPERTY LINE.

STATEMENT OF USE

THIS DOCUMENT AND ANY ILLUSTRATIONS HEREON ARE PROVIDED AS STANDARD CONSTRUCTION DETAILS WITHIN ALPINE CITY. DEVEATION FROM THIS DOCUMENT REQUIRES APPROVAL OF ALPINE CITY, ALPINE CITY CORPRTATION CAN NOT BE HELD LIABLE FOR MISSUSE OR CHANGES REGARDING THIS DOCUMENT.

REVISION

NO.		BY	APRL	DATE

ALPINE CITY
ESTABLISHED 1850

CAD FILE: \Engineering\Standard Drawings\2015\PI CONNECTION 8K.dwg

Pressurized Irrigation Distribution System

ALPINE CITY
20 NORTH MAIN
ALPINE, UT 84004

STANDARD DRAWING NUMBER: 24

PLOT SCALE:	N.T.S.
DRAWN BY:	B.D.B.
DESIGN BY:	
CHECKED BY:	
ADOPTED DATE:	8/10/05

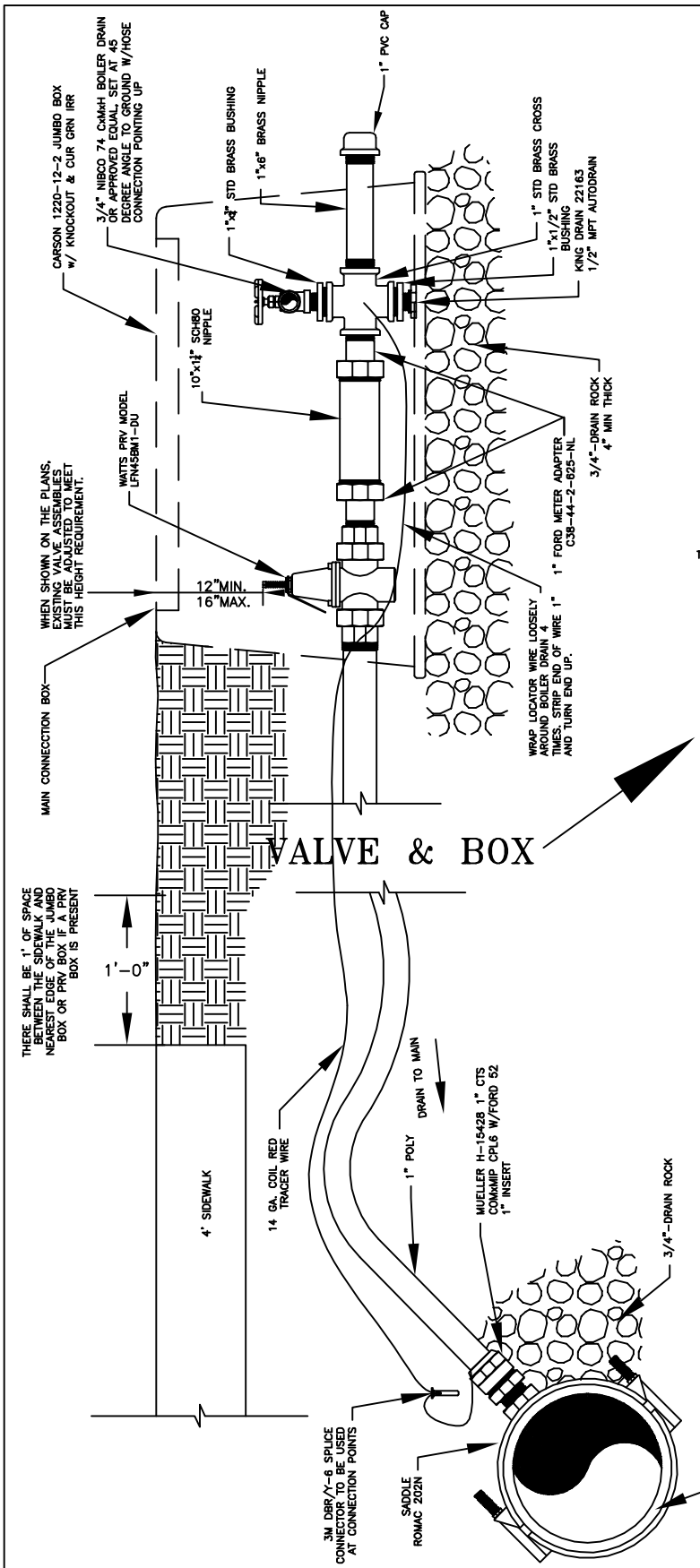

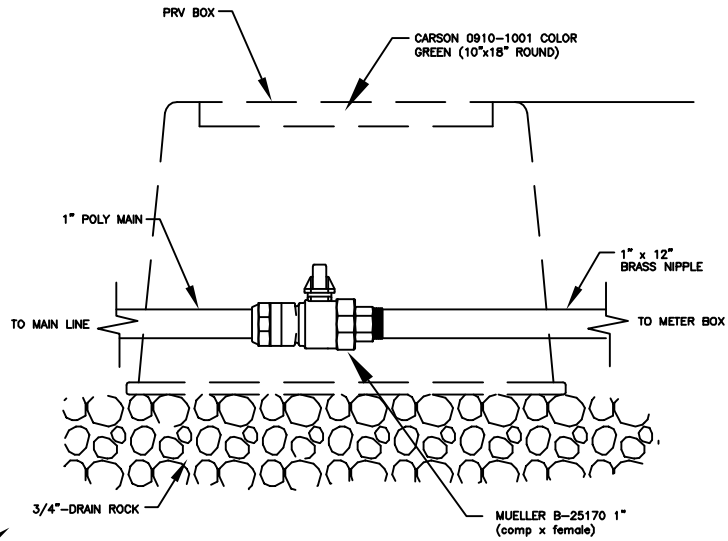

NOTES:

1. WHERE COMBINATION CURB, GUTTER, AND SIDEWALK EXISTS, THE IRRIGATION BOX SHALL BE PLACED 1' BEHIND THE SIDEWALK.
2. IN LOCATIONS, WHERE NO CURB AND GUTTER EXIST OR ONLY CURB AND GUTTER WITHOUT SIDEWALK, THE IRRIGATION BOX SHALL BE PLACED ON THE PROPERTY LINE.
   COORDINATE W/ ALPINE CITY R.W.
3. ALL FITTINGS TO BE AS SPECIFIED OR APPROVED EQUAL.
4. PIPE DOPE TO BE USED ON ALL THREADED FITTINGS.
   (RECTOR SEAL T PLUS 2 TEFLON ENRICHED THREAD SEALANT.)

STATEMENT OF USE

THIS DOCUMENT AND ANY ILLUSTRATIONS HEREON ARE PROVIDED AS STANDARD CONSTRUCTION DETAILS WITHIN ALPINE CITY. DEVEATION FROM THIS DOCUMENT REQUIRES APPROVAL OF ALPINE CITY, ALPINE CITY CORPRTATION CAN NOT BE HELD LIABLE FOR MISSUSE OR CHANGES REGARDING THIS DOCUMENT.

REVISION

NO.		BY	APRL	DATE

ALPINE CITY
ESTABLISHED 1850

CAD FILE: \Engineering\Standard Drawings\2015\PI CONNECTION 66.dwg

Pressurized Irrigation System w/PRV

ALPINE CITY
20 NORTH MAIN
ALPINE, UT 84004

STANDARD DRAWING NUMBER: 25

PLOT SCALE:	N.T.S.
DRAWN BY:	B.D.B.
DESIGN BY:	
CHECKED BY:	
ADOPTED DATE:	8/10/05

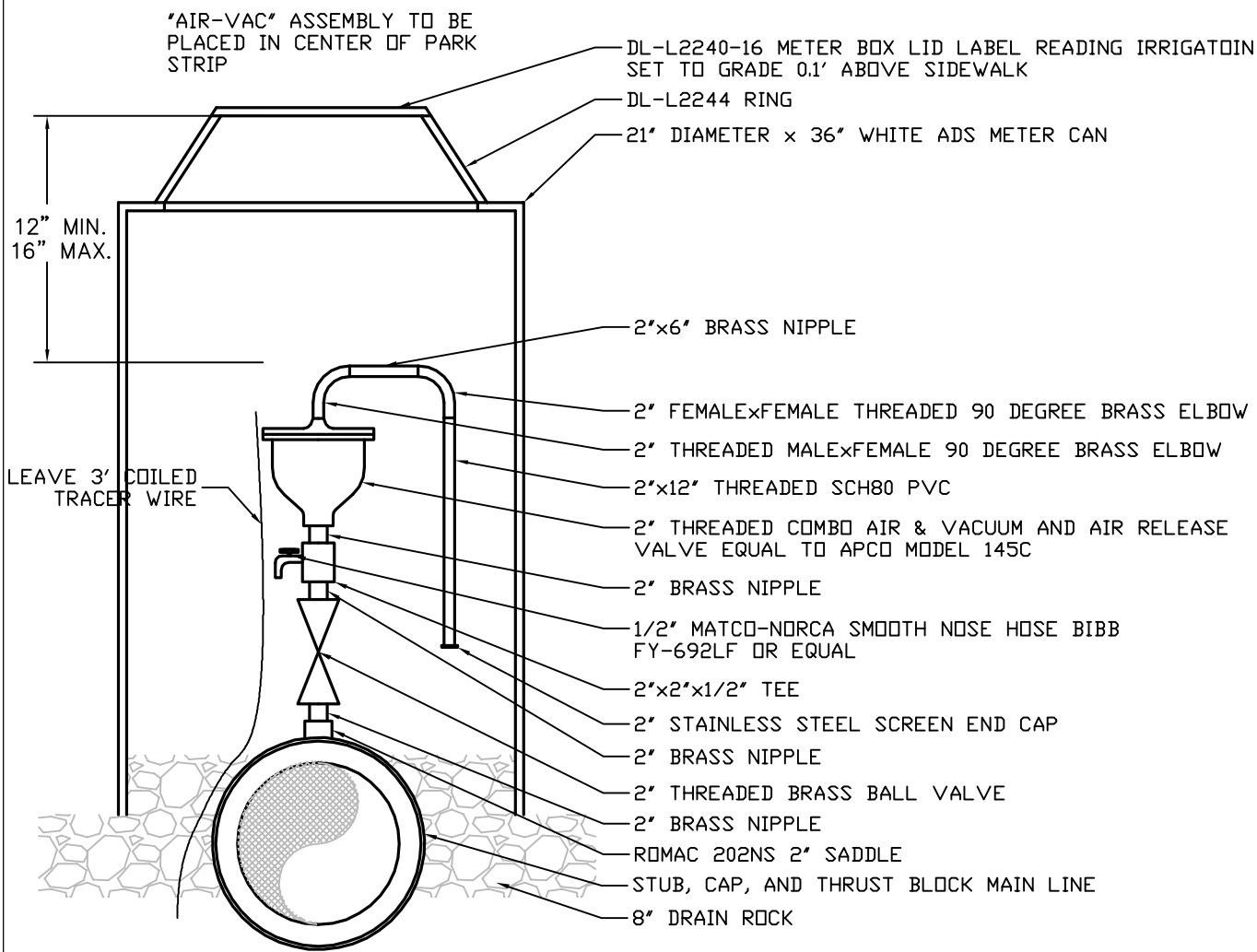

STATEMENT OF USE

THIS DOCUMENT AND ANY ILLUSTRATIONS HEREON ARE PROVIDED AS STANDARD CONSTRUCTION DETAILS WITHIN ALPINE CITY. DEVEATION FROM THIS DOCUMENT REQUIRES APPROVAL OF ALPINE CITY, ALPINE CITY CORPRTATION CAN NOT BE HELD LIABLE FOR MISSUSE OR CHANGES REGARDING THIS DOCUMENT.

REVISION

NO.		BY	APRL.	DATE

ALPINE CITY
ESTABLISHED 1850

CAD FILE:E:\ENGINEERING\STANDARD DRAWINGS\2015 UPDATED (CURRENT)\26 PI AIRVAC

SECONDARY WATER AIR-VAC ASSEMBLY

ALPINE CITY
20 NORTH MAIN
ALPINE, UT 84004

STANDARD DRAWING NUMBER:	26
PLOT SCALE:	N.T.S.
DRAWN BY:	WJM
DESIGN BY:	
CHECKED BY:	
ADOPTED DATE:	12/7/18

NOTE: METER BOX, COVER, COPPERSETTER, CORPORATION STOP, & SERVICE LINES TO BE FURNISHED AND INSTALLED BY DEVELOPER.

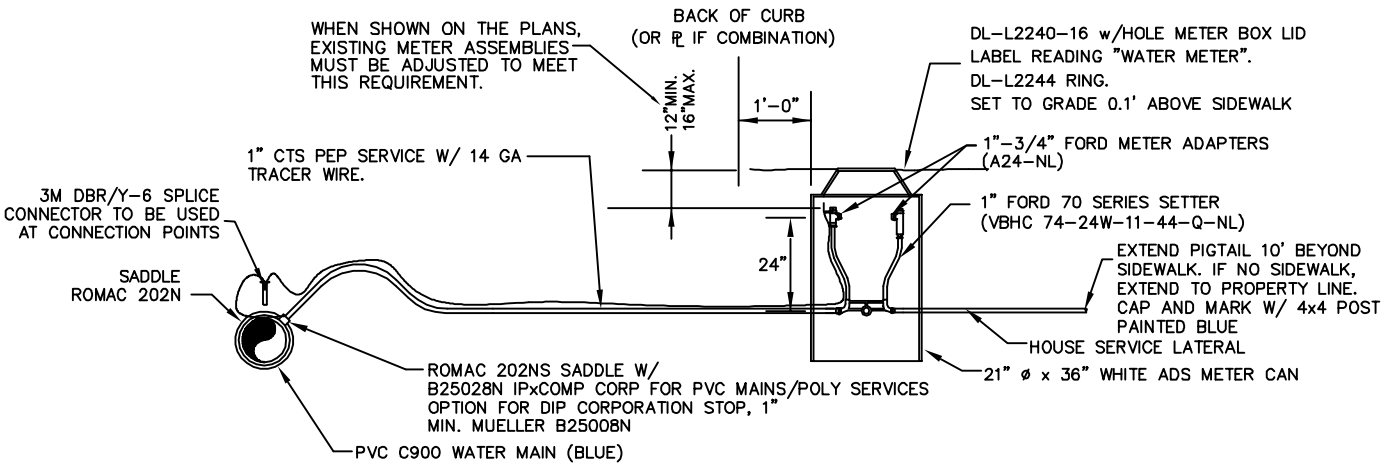

1" WATER SERVICE CONNECTION

N.T.S.

NOTE: METER BOX, COVER, COPPERSETTER, CORPORATION STOP, & SERVICE LINES TO BE FURNISHED AND INSTALLED BY DEVELOPER.

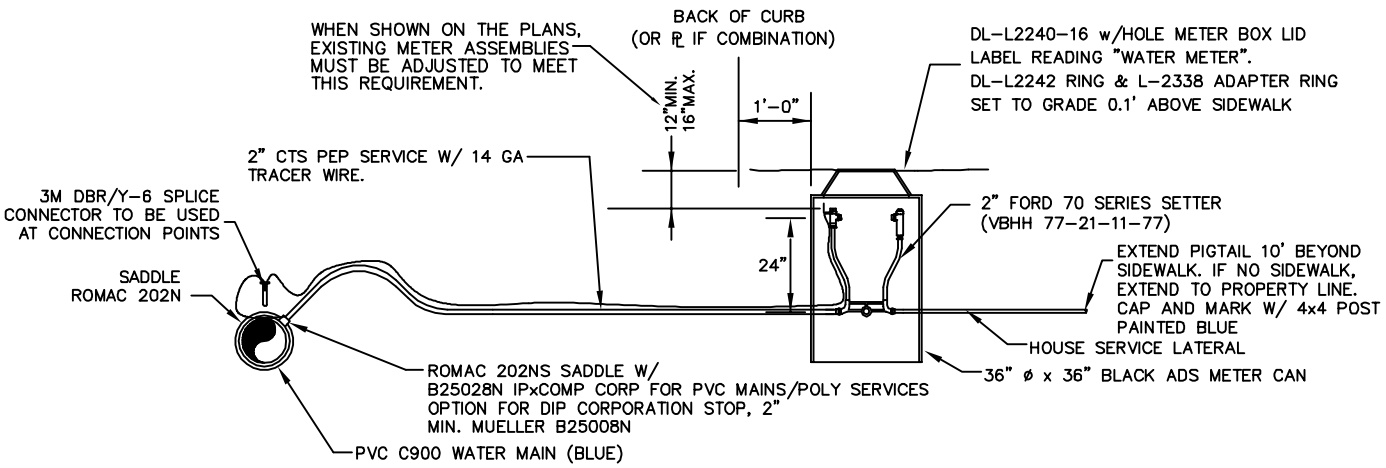

NOTE: FOR 1.5" SERVICES: ALL PARTS SHOWN ABOVE ARE THE SAME EXCEPT THE SERVICE LINE AND SETTER, WHICH WOULD BOTH BE CHANGED TO 1.5"

1.5" & 2" WATER SERVICE CONNECTIONS

N.T.S.

STATEMENT OF USE

THIS DOCUMENT AND ANY ILLUSTRATIONS HEREON ARE PROVIDED AS STANDARD CONSTRUCTION DETAILS WITHIN ALPINE CITY. DEVEATION FROM THIS DOCUMENT REQUIRES APPROVAL OF ALPINE CITY, ALPINE CITY CORPRTATION CAN NOT BE HELD LIABLE FOR MISSUSE OR CHANGES REGARDING THIS DOCUMENT.

REVISION

NO.		BY	APRL	DATE

ALPINE CITY
ESTABLISHED 1850

CAD FILE: E:\ENGINEERING\STANDARD DRAWINGS\2015 UPDATED (CURRENT)\27 WATER SERVICES

WATER SERVICE CONNECTION DETAIL

ALPINE CITY
20 NORTH MAIN
ALPINE, UT 84004

STANDARD DRAWING NUMBER:	27
PLOT SCALE:	N.T.S.
DRAWN BY:	WJM
DESIGN BY:	
CHECKED BY:	
ADOPTED DATE:	4/14/04

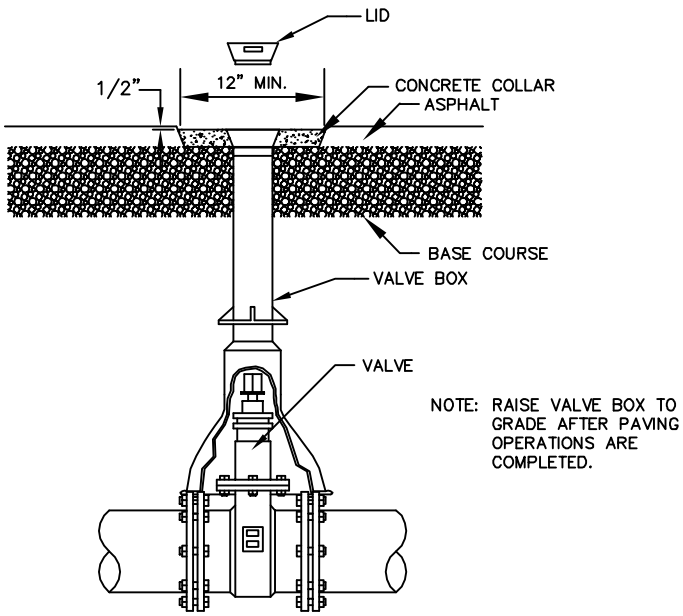

VALVE BOX COLLAR DETAIL

N.T.S.

STATEMENT OF USE

THIS DOCUMENT AND ANY ILLUSTRATIONS HEREON ARE PROVIDED AS STANDARD CONSTRUCTION DETAILS WITHIN ALPINE CITY. DEVEATION FROM THIS DOCUMENT REQUIRES APPROVAL OF ALPINE CITY, ALPINE CITY CORPRTATION CAN NOT BE HELD LIABLE FOR MISSUSE OR CHANGES REGARDING THIS DOCUMENT.

REVISION

NO.		BY	APRL	DATE

ALPINE CITY
ESTABLISHED 1850

CAD FILE: E:\ENGINEERING\STANDARD DRAWINGS\2015 UPDATED (CURRENT)\27A VALVE BOX

VALVE BOX DETAIL

ALPINE CITY
20 NORTH MAIN
ALPINE, UT 84004

STANDARD DRAWING NUMBER: 27a

PLOT SCALE:	N.T.S.
DRAWN BY:	WJM
DESIGN BY:	
CHECKED BY:	
ADOPTED DATE:	4/14/04

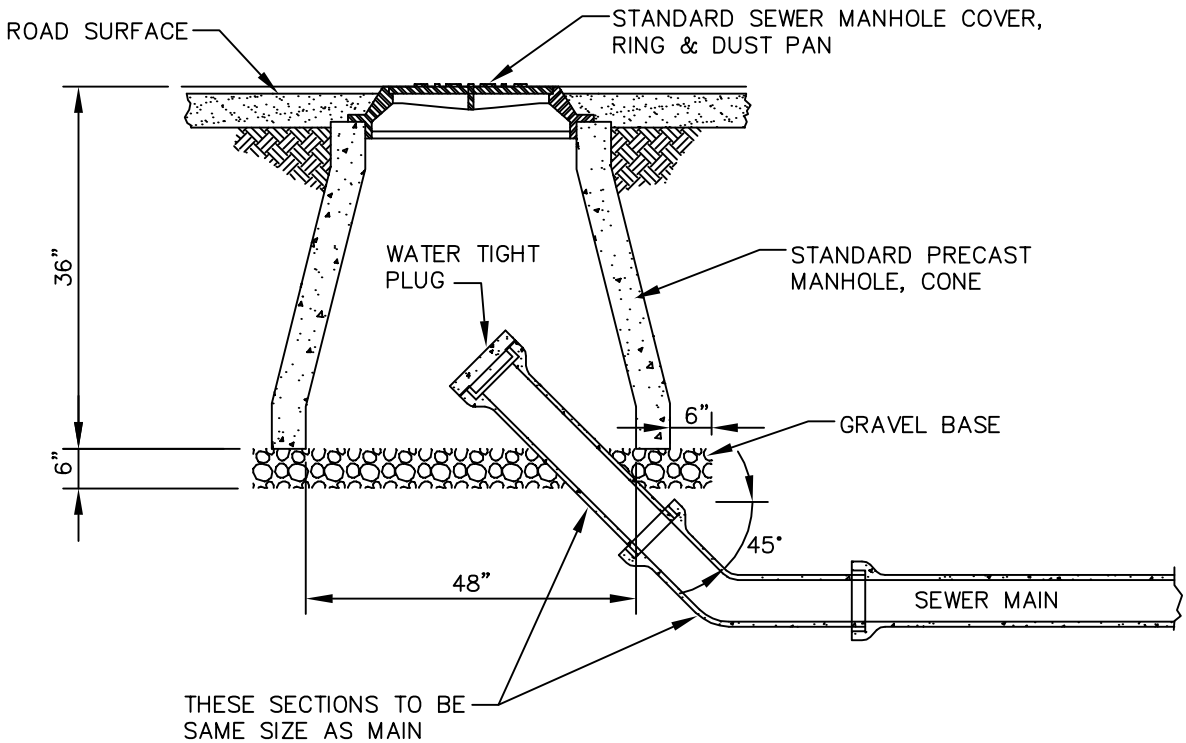

TEMPORARY SEWER MAIN CLEANOUT

N.T.S.

STATEMENT OF USE

THIS DOCUMENT AND ANY ILLUSTRATIONS HEREON ARE PROVIDED AS STANDARD CONSTRUCTION DETAILS WITHIN ALPINE CITY. DEVEATION FROM THIS DOCUMENT REQUIRES APPROVAL OF ALPINE CITY, ALPINE CITY CORPRTATION CAN NOT BE HELD LIABLE FOR MISSUSE OR CHANGES REGARDING THIS DOCUMENT.

REVISION

NO.		BY	APRL	DATE

ALPINE CITY
ESTABLISHED 1850

CAD FILE: E:\ENGINEERING\STANDARD DRAWINGS\2015 UPDATED (CURRENT)\28 SEWCNOUT

TEMPORARY SEWER MAIN CLEANOUT

ALPINE CITY
20 NORTH MAIN
ALPINE, UT 84004

STANDARD DRAWING NUMBER:	28
PLOT SCALE:	N.T.S.
DRAWN BY:	WJM
DESIGN BY:	
CHECKED BY:	
ADOPTED DATE:	4/14/04

ALPINE CITY
ESTABLISHED 1850

PUBLIC OPEN SPACE

SIGN SPECIFICATIONS

- SIGN TO BE 18"x24"
- PRINTED WITH BLACK LETTERS, WHITE BACKGROUND
- LAMINATED AND STAPLED TO PLYWOOD
- WIRED TO T-POSTS
- SPACED ONE PER JOB SITE IN A VISIBLE LOCATION IF MORE THAN 300' OF FENCING REQ'D, ONE SIGN TO BE PLACED EVERY 300'

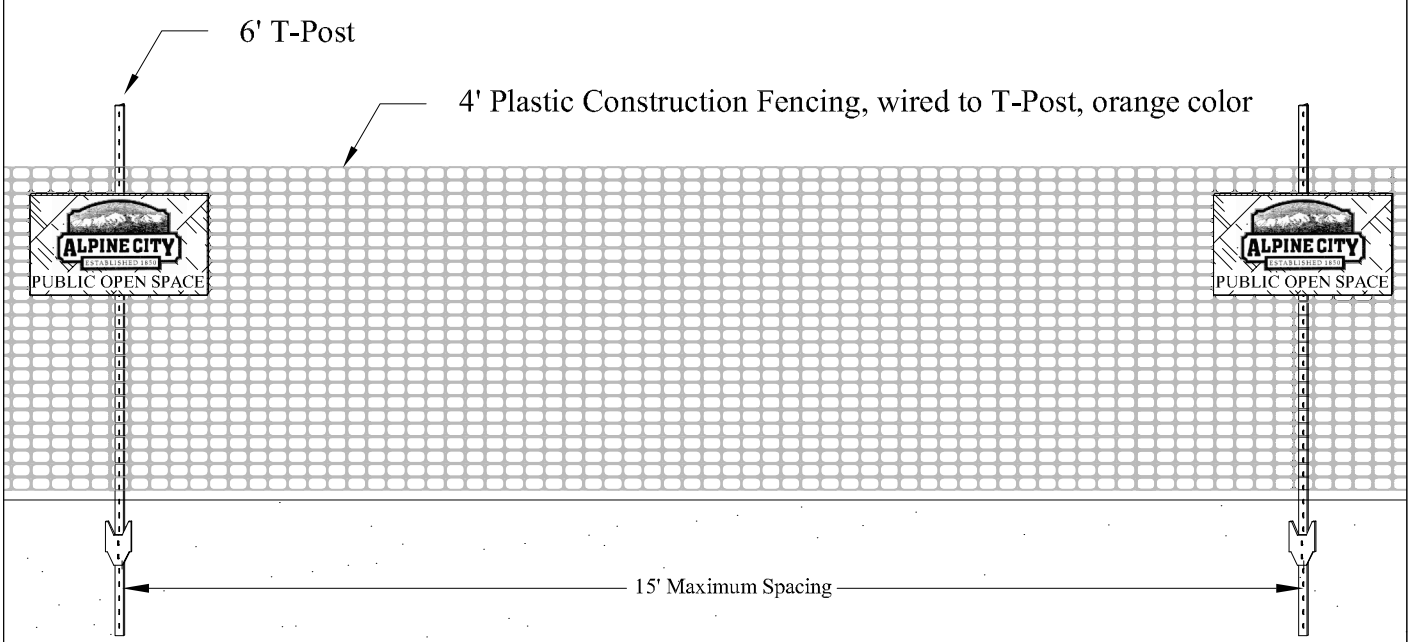

STATEMENT OF USE

THIS DOCUMENT AND ANY ILLUSTRATIONS HEREON ARE PROVIDED AS STANDARD CONSTRUCTION DETAILS WITHIN ALPINE CITY. DEVEATION FROM THIS DOCUMENT REQUIRES APPROVAL OF ALPINE CITY, ALPINE CITY CORPRTATION CAN NOT BE HELD LIABLE FOR MISSUSE OR CHANGES REGARDING THIS DOCUMENT.

REVISION

NO.		BY	APRL	DATE

ALPINE CITY
ESTABLISHED 1850

CAD FILE: D:\ENGINEERING\STANDARD DRAWINGS\2015 UPDATED (CURRENT)\29 PUBLIC OPEN SPACE FENCING

PUBLIC OPEN SPACE FENCING

ALPINE CITY
20 NORTH MAIN
ALPINE, UT 84004

STANDARD DRAWING NUMBER:	29
PLOT SCALE:	N.T.S.
DRAWN BY:	WJM
DESIGN BY:	
CHECKED BY:	
ADOPTED DATE:	4/14/04

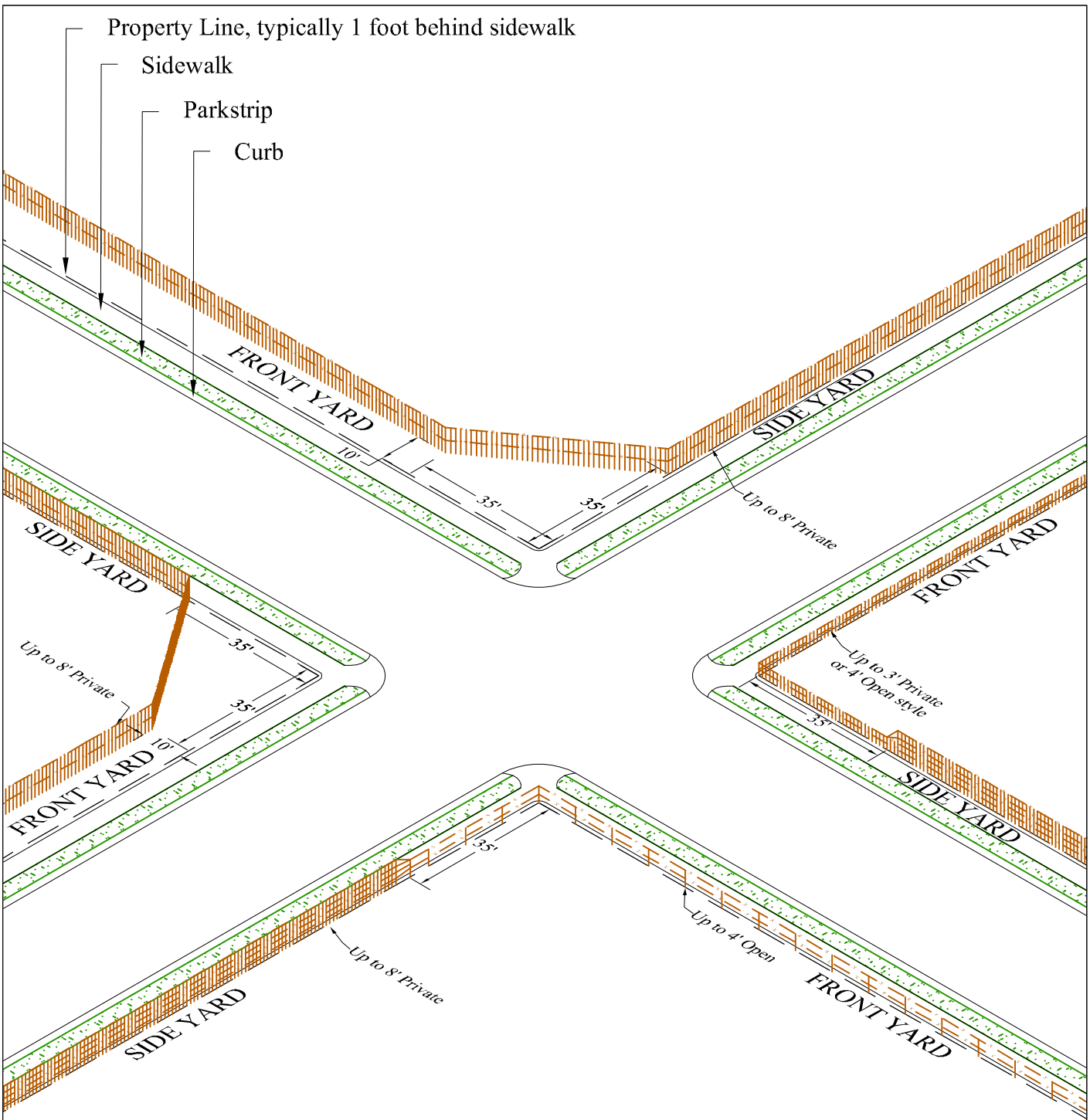

NOTE: SEE DEVELOPMENT CODE SECTION 3.21.6
ALL PARTS OF THE FENCE TO BE PLACED NO CLOSER THAN 1 FOOT BEHIND SIDEWALK (OR ON PROPERTY LINES) WITH HEIGHTS AS SHOWN. FREE BUILDING PERMIT REQUIRED.

STATEMENT OF USE

THIS DOCUMENT AND ANY ILLUSTRATIONS HEREON ARE PROVIDED AS STANDARD CONSTRUCTION DETAILS WITHIN ALPINE CITY. DEVEATION FROM THIS DOCUMENT REQUIRES APPROVAL OF ALPINE CITY, ALPINE CITY CORPRTATION CAN NOT BE HELD LIABLE FOR MISSUSE OR CHANGES REGARDING THIS DOCUMENT.

REVISION

NO.		BY	APRL.	DATE

ALPINE CITY
ESTABLISHED 1850

CAD FILE: E:\ENGINEERING\STANDARD DRAWINGS\2015 UPDATED (CURRENT)\30 FENCING REGULATIONS

FENCING REGULATIONS

ALPINE CITY
20 NORTH MAIN
ALPINE, UT 84004

STANDARD DRAWING NUMBER:	30
PLOT SCALE:	N.T.S.
DRAWN BY:	WJM
DESIGN BY:	
CHECKED BY:	
ADOPTED DATE:	4/14/04

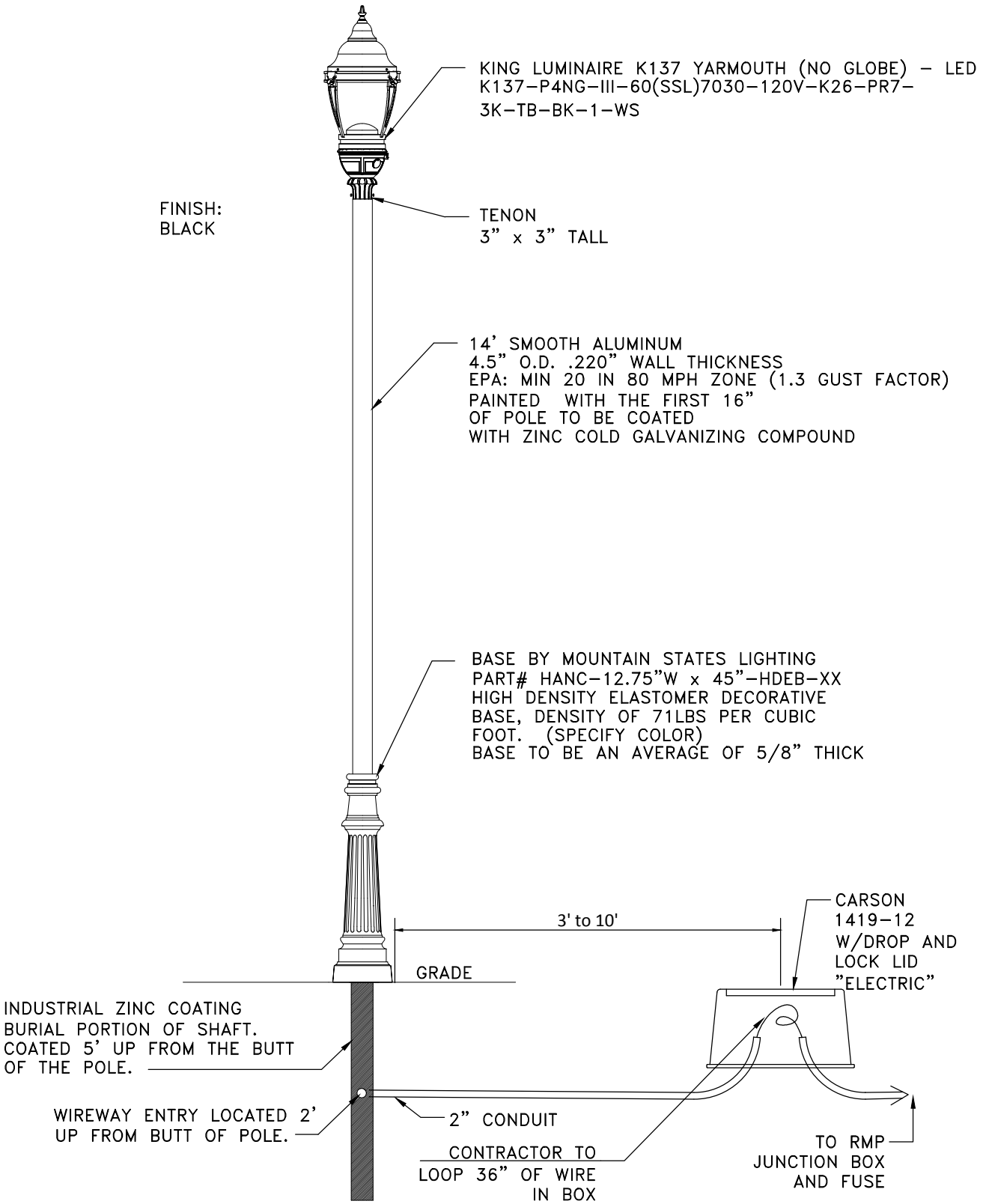

STATEMENT OF USE

THIS DOCUMENT AND ANY ILLUSTRATIONS HEREON ARE PROVIDED AS STANDARD CONSTRUCTION DETAILS WITHIN ALPINE CITY. DEVEATION FROM THIS DOCUMENT REQUIRES APPROVAL OF ALPINE CITY, ALPINE CITY CORPRTATION CAN NOT BE HELD LIABLE FOR MISSUSE OR CHANGES REGARDING THIS DOCUMENT.

REVISION

NO.		BY	APRL.	DATE

ALPINE CITY
ESTABLISHED 1850

CAD FILE: E:\ENGINEERING\STANDARD SPECIFICATIONS AND DRAWINGS\2020 CITY SPEC AND DETAILS (PROPOSED)\CITY DETAILS\31 RESIDENTIAL POLE ASSEMBLY

RESIDENTIAL STREET LIGHT

ALPINE CITY
20 NORTH MAIN
ALPINE, UT 84004

STANDARD DRAWING NUMBER:	31
PLOT SCALE:	N.T.S.
DRAWN BY:	WJM
DESIGN BY:	
CHECKED BY:	
ADOPTED DATE:	DRAFT

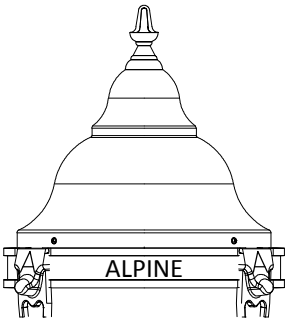

ENLARGED FIXTURE TOP

NOTE!!
IF DEPTH CANNOT BE MET MASS MUST BE EQUIVALENT TO MASS SHOWN

FINISH;
BLACK

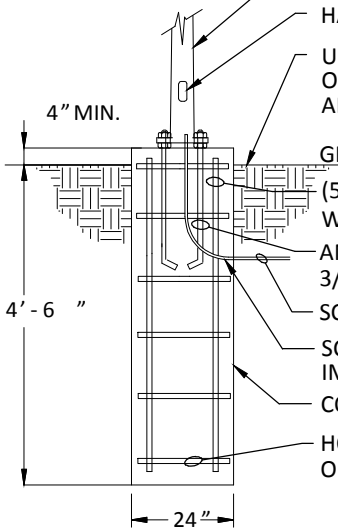

CONCRETE BASE DETAIL

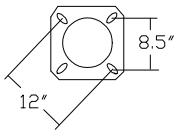

ANCHOR BASE DETAIL
12"BOLT CIRCLE
ANCHOR BOLTS: 3/4"x 18"

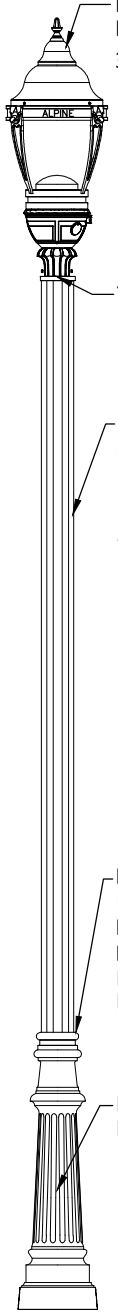

KING LUMINAIRE K137 YARMOUTH (NO GLOBE) - LED
K137-P4NG-III-100(SSL)7030-120V-K26-PR7-
3K-TB-BK-1-WS

TENON 3"X3" TALL

14' EXTRUDED FLUTED ALUMINUM
5.0" O.D. .250" WALL THICKNESS
EPA MIN 20 IN 80 MPH ZONE (1.3 GUST FACTOR)
PAINTED WITH THE FIRST 16"
OF POLE TO BE COATED
WITH ZINC COLD GALVANIZING COMPOUND

BASE BY MOUNTAIN STATES
PART# HANC-12.75"W x 45"-HDEB-BK
HIGH DENSITY ELASTOMER DECORATIVE
BASE, DENSITY OF 71LBS PER CUBIC
DENSITY: 71LBS PER CUBIC FOOT.
BASE TO BE AN AVERAGE OF 5/8" THICK

HANDHOLE LOCATED 12" ABOVE GRADE
BEHIND TWO-PIECE DECORATIVE BASE.

** SEE DETAIL 31 **
FOR REQUIRED
JUNCTION BOX
AT BASE

STATEMENT OF USE

THIS DOCUMENT AND ANY ILLUSTRATIONS HEREON ARE PROVIDED AS STANDARD CONSTRUCTION DETAILS WITHIN ALPINE CITY. DEVEATION FROM THIS DOCUMENT REQUIRES APPROVAL OF ALPINE CITY, ALPINE CITY CORPRTATION CAN NOT BE HELD LIABLE FOR MISSUSE OR CHANGES REGARDING THIS DOCUMENT.

REVISION

NO.		BY	APRL.	DATE

ALPINE CITY
ESTABLISHED 1850

CAD FILE: 31A STREET LIGHT ALPINE CURRENT ARTERIAL POLE ASSEMBLY 9-23-20

DOWNTOWN STREET LIGHT

ALPINE CITY
20 NORTH MAIN
ALPINE, UT 84004

STANDARD DRAWING NUMBER: 31a

PLOT SCALE:	N.T.S.
DRAWN BY:	WJM
DESIGN BY:	
CHECKED BY:	
ADOPTED DATE:	12/7/18

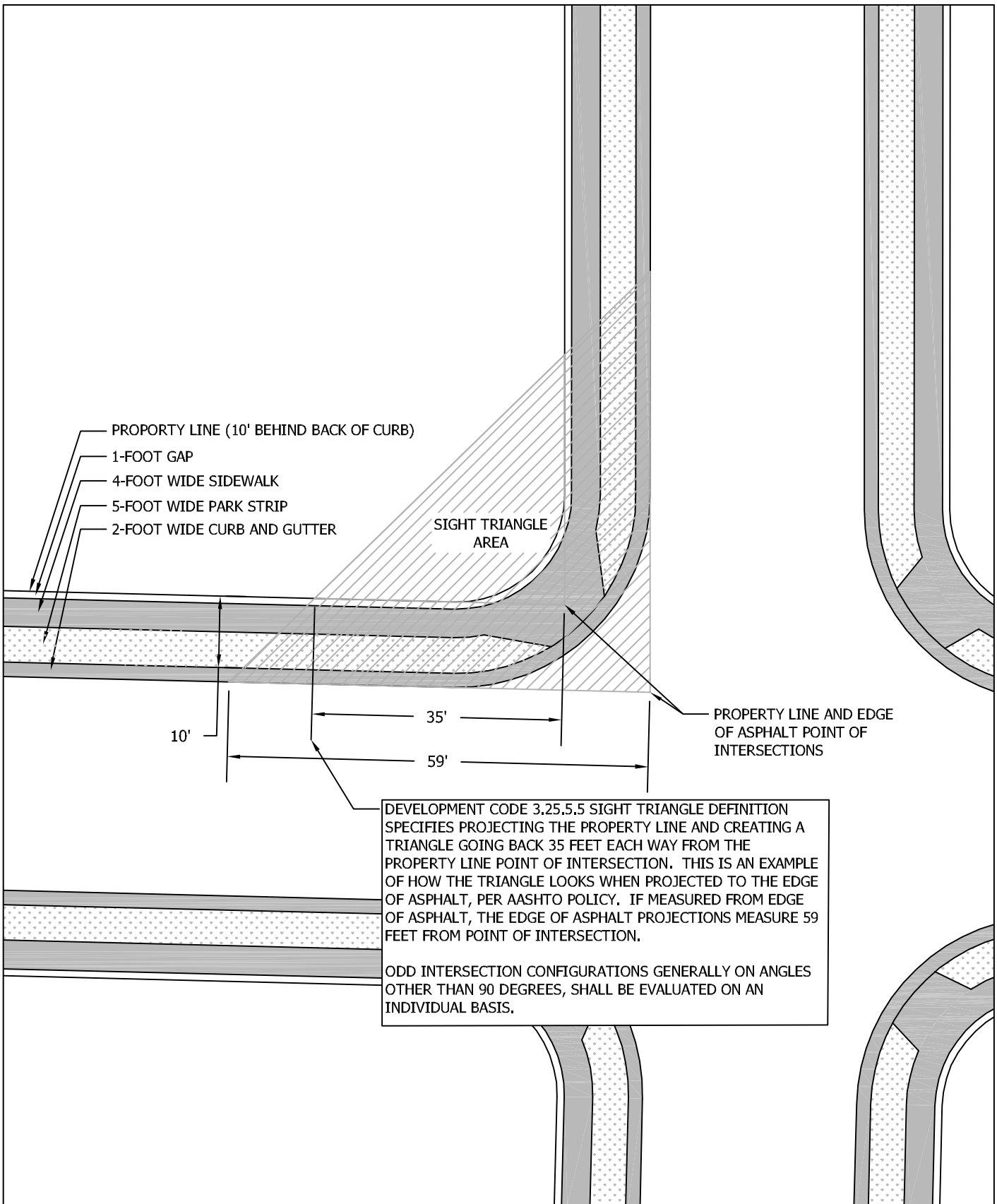

DEVELOPMENT CODE 3.25.5.5 SIGHT TRIANGLE DEFINITION SPECIFIES PROJECTING THE PROPERTY LINE AND CREATING A TRIANGLE GOING BACK 35 FEET EACH WAY FROM THE PROPERTY LINE POINT OF INTERSECTION. THIS IS AN EXAMPLE OF HOW THE TRIANGLE LOOKS WHEN PROJECTED TO THE EDGE OF ASPHALT, PER AASHTO POLICY. IF MEASURED FROM EDGE OF ASPHALT, THE EDGE OF ASPHALT PROJECTIONS MEASURE 59 FEET FROM POINT OF INTERSECTION.

ODD INTERSECTION CONFIGURATIONS GENERALLY ON ANGLES OTHER THAN 90 DEGREES, SHALL BE EVALUATED ON AN INDIVIDUAL BASIS.

STATEMENT OF USE

THIS DOCUMENT AND ANY ILLUSTRATIONS HEREON ARE PROVIDED AS STANDARD CONSTRUCTION DETAILS WITHIN ALPINE CITY. DEVEATION FROM THIS DOCUMENT REQUIRES APPROVAL OF ALPINE CITY. ALPINE CITY CORPRTATION CAN NOT BE HELD LIABLE FOR MISSUSE OR CHANGES REGARDING THIS DOCUMENT.

REVISION

NO.		BY	APRL	DATE

ALPINE CITY
ESTABLISHED 1850

CAD FILE: E:\ENGINEERING\STANDARD DRAWINGS\2010 UPDATED (CURRENT)\32 SIGHT TRIANGLE

SIGHT TRIANGLE

ALPINE CITY
20 NORTH MAIN
ALPINE, UT 84004

STANDARD DRAWING NUMBER: 32

PLOT SCALE:	N.T.S.
DRAWN BY:	J.M.
DESIGN BY:	
CHECKED BY:	
ADOPTED DATE:	10/13/11

PASTURE GRASS MIX

20 lbs CABIN BLEND AND 5 lbs ROCKY MOUNTAIN WILDFLOWER MIX PER ACRE

CABIN BLEND	
SPECIES	% BY WEIGHT
MOUNTAIN BROME	30
SLENDER WHEATGRASS	25
SANDBERG BLUEGRASS	5
BIG BLUEGRASS	5
SHEEP FESCUE	5
WESTERN WHEATGRASS	20
BEARDLESS BLUEBUNCH WHEATGRASS	10

ROCKY MOUNTAIN WILDFLOWER MIX	
SPECIES	% BY WEIGHT
BLUE FLAX	9
PURPLE CONEFLOWER	10
BLACKEYED SUSAN	2
CALIFORNIA POPPY	11
WALLFLOWER	6
FIREWHEEL	7
WILD LUPINE	10
LANCE-LEAVED COREOPSIS	8
PRAIRIE CONEFLOWER	2
MEXICAN HAT	2
FLANDERS POPPY	2
YELLOW COSMOS	5
BACHELOR BUTTON	6
PLAINS COREOPSIS	2
MOUNTAIN PHLOX	1
ROCKY MOUNTAIN IRIS	3
MOUNTAIN LUPINE	6
SHOWY GOLDENEYE	3
BLANKET FLOWER	6

WETLANDS/STREAM BANK GRASS MIX

15 LBS PER ACRE

WETLAND/STREAMBANK MIX	
SPECIES	% BY WEIGHT
INLAND SALTGRASS	13.3
WESTERN WHEATGRASS	13.3
STREAMBANK WHEATGRASS	13.3
NEBRASKA SEDGE	20
BLUEJOINT REEDGRASS	1.67
BEAKED SEDGE	20
BALTIC RUSH	1.67
MEADOW SEDGE	16.67

STATEMENT OF USE

THIS DOCUMENT AND ANY ILLUSTRATIONS HEREON ARE PROVIDED AS STANDARD CONSTRUCTION DETAILS WITHIN ALPINE CITY. DEVEATION FROM THIS DOCUMENT REQUIRES APPROVAL OF ALPINE CITY, ALPINE CITY CORPRTATION CAN NOT BE HELD LIABLE FOR MISSUSE OR CHANGES REGARDING THIS DOCUMENT.

REVISION

NO.		BY	APRL.	DATE

ALPINE CITY
ESTABLISHED 1850

CAD FILE: E:\ENGINEERING\STANDARD DRAWINGS\2015 UPDATED (CURRENT)\33 SEED MIXTURES

STANDARD SEED MIXTURES

ALPINE CITY
20 NORTH MAIN
ALPINE, UT 84004

STANDARD DRAWING NUMBER: 33

PLOT SCALE:	N.T.S.
DRAWN BY:	WJM
DESIGN BY:	
CHECKED BY:	
ADOPTED DATE:	12/7/18

PER DEVELOPMENT CODE 4.07.190, ALL IRRIGATION COMPANY DITCHES ARE REQUIRED TO BE PIPED UNDERGROUND AS PART OF DEVELOPMENT.

THE MINIMUM PIPE SIZE FOR IRRIGATION CO. NEEDS IS AS FOLLOWS:
WEST FIELD DITCH - 36 INCHES
NORTH FIELD DITCH - 30 INCHES
FORT DITCH - 30 INCHES
EAST FIELD DITCH - 36 INCHES
HIGH BENCH DITCH - 30 INCHES

THE SIZING OF PIPES FOR ALL DITCHES MUST ALSO CONSIDER THE NEEDS OF THE CITY. COORDINATION WITH ALPINE CITY IS REQUIRED.

ALL PIPED DITCHES SHOULD USE REINFORCED CONCRETE PIPE FOR ROAD CROSSINGS AND WHERE DEPTHS ARE LESS THAN 2 FEET OR MORE THAN 8 FEET DEEP TO THE TOP OF PIPE.

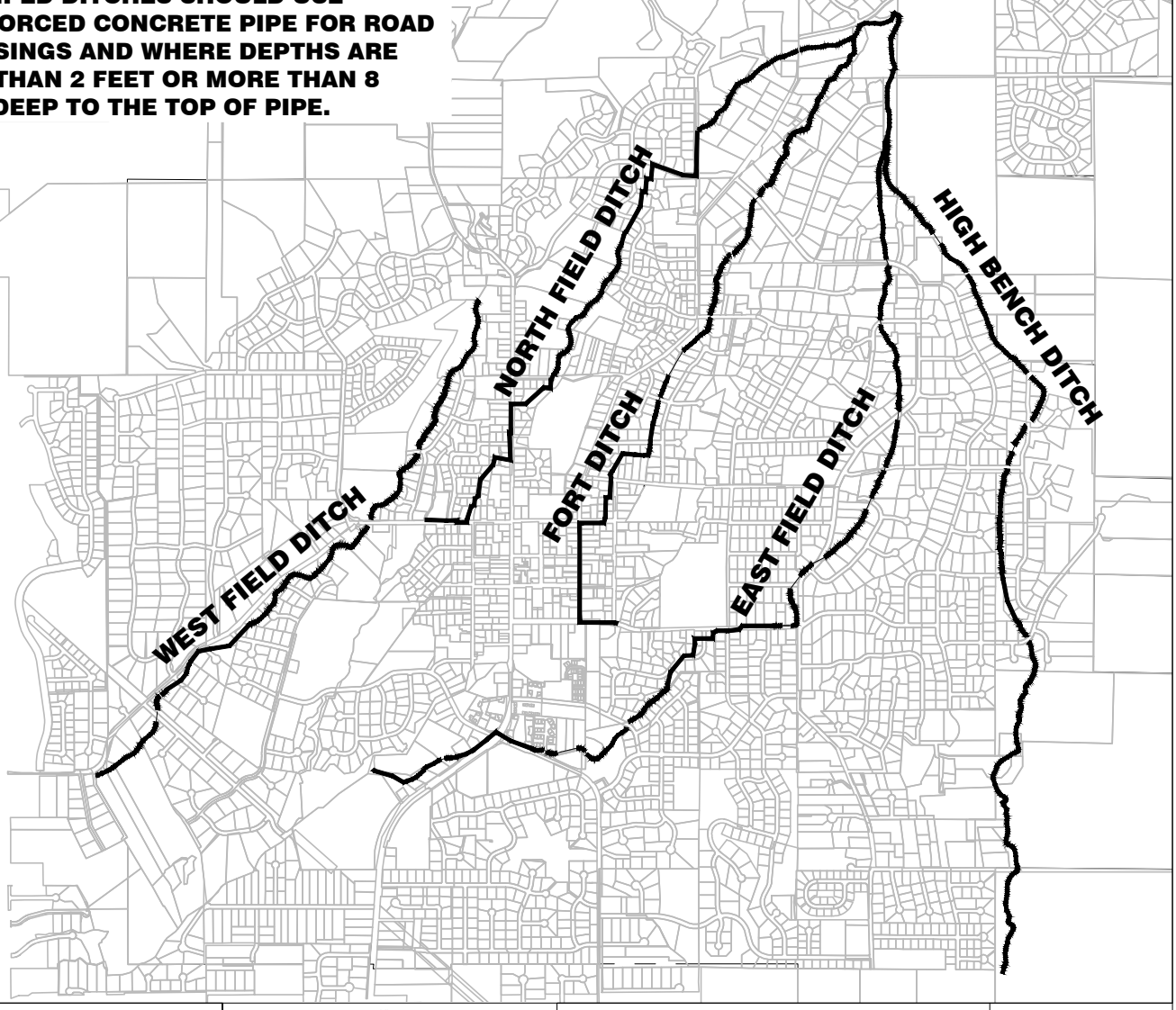

STATEMENT OF USE

THIS DOCUMENT AND ANY ILLUSTRATIONS HEREON ARE PROVIDED AS STANDARD CONSTRUCTION DETAILS WITHIN ALPINE CITY. DEVEATION FROM THIS DOCUMENT REQUIRES APPROVAL OF ALPINE CITY, ALPINE CITY CORPRTATION CAN NOT BE HELD LIABLE FOR MISSUSE OR CHANGES REGARDING THIS DOCUMENT.

REVISION

NO.		BY	APRL.	DATE

ALPINE CITY
ESTABLISHED 1850

CAD FILE: E:\ENGINEERING\STANDARD DRAWINGS\2015 UPDATED (CURRENT)\34 IRRIGATION COMPANY DITCHES

IRRIGATION CO. DITCHES

ALPINE CITY
20 NORTH MAIN
ALPINE, UT 84004

STANDARD DRAWING NUMBER: 34

PLOT SCALE:	N.T.S.
DRAWN BY:	WJM
DESIGN BY:	
CHECKED BY:	
ADOPTED DATE:	12/7/18

RESOLUTION NO. R2020-16

ADOPTING CONSTRUCTION STANDARDS SPECIFICATIONS AND DETAILS

A RESOLUTION ADOPTING UPDATED CONSTRUCTION STANDARDS SPECIFICATIONS AND DETAILS FOR THE CITY OF ALPINE.

WHEREAS, the Planning Commission of Alpine City has certified Construction Standards Specifications and Details, and

WHEREAS, the City Council deems it to be in the best interest and general welfare of the City of Alpine to adopt said Construction Standards Specifications and Details;

THEREFORE, be it resolved by the City Council of the City of Alpine that the Construction Standards Specifications and Details dated October 13, 2020 is hereby adopted as the Construction Standards Specifications and Details of the City of Alpine.

This resolution shall become effective immediately upon its passage.

Dated this _____ day of October 2020.

_____
TROY STOUT, MAYOR

ATTEST:

_____
BONNIE COOPER, CITY RECORDER

ALPINE PLANNING COMMISSION AGENDA

SUBJECT: Discussion – Ordinance 2020-19 Outdoor Lighting

FOR CONSIDERATION ON: 6 October 2020

PETITIONER: Staff

ACTION REQUESTED BY PETITIONER: Review and discuss the proposed ordinance.

BACKGROUND INFORMATION:

Staff have prepared a draft ordinance based on past Planning Commission meeting discussions. If the Planning Commission approves of the proposed ordinance a public hearing will be scheduled for the following meeting.

STAFF RECOMMENDATION:
Review and discuss the proposed ordinance.

3.XX.100 OUTDOOR LIGHTING (DRAFT)

1. **Sport Courts.** All lighting shall be directed downward and shall not spill on to an adjacent property. Light operating hours shall be restricted to 7:00 am - 10:00 pm.

2. **House and Accessory Structures**. All lighting shall be directed downward and shall not spill on to an adjacent property. Light operating hours shall be restricted to 7:00 am - 12:00 pm. Security lighting that is on a timer shall be exempt from operating hour restrictions.

ALPINE PLANNING COMMISSION AGENDA

SUBJECT: Discussion – Ordinance 2020-20 Garage Doors

FOR CONSIDERATION ON: 6 October 2020

PETITIONER: Staff

ACTION REQUESTED BY PETITIONER: Review and discuss the proposed ordinance.

BACKGROUND INFORMATION:

Staff have prepared a draft ordinance based on feedback from the Mayor. Planning Commission should review and discuss the ordinance and decide if this is something they would like to move forward with. If the Planning Commission approves of the proposed ordinance a public hearing will be scheduled for the following meeting.

STAFF RECOMMENDATION:
Review and discuss the proposed ordinance.

ALPINE CITY
ORDINANCE 2020-20

AN ORDINANCE ADOPTING AMENDMENTS TO ARTICLE 3.02.090, 3.03.100, 3.04.100 AND 3.05.100 OF THE ALPINE CITY DEVELOPMENT CODE PERTAINING TO GARAGE DOOR RESTRICTIONS.

WHEREAS, The City Council of Alpine, Utah has deemed it in the best interest of Alpine City to amend the ordinance to set forth restrictions for garage doors on a home in Alpine City; and

WHEREAS, > the Alpine City Planning Commission has reviewed the proposed Amendments to the Development Code, held a public hearing, and has forwarded a recommendation to the City Council; and

WHEREAS, the Alpine City Council has reviewed the proposed Amendments to the Development Code:

NOW THEREFORE, be it ordained by the Council of Alpine City, in the State of Utah, as follows: The amendments to Article 3.02.090, 3.03.100, 3.04.100 and 3.05.100 contained in the attached document will supersede Article 3.02.090, 3.03.100, 3.04.100 and 3.05.100 as previously adopted. This ordinance shall take effect upon posting.

SECTION 1: **AMENDMENT** "3.02.090 Special Provisions" of the Alpine City Development Code is hereby *amended* as follows:

AMENDMENT

3.02.090 Special Provisions

1. **Heliports**. The installation of a heliport for the use of a helicopter or other manned rotary wing aircrafts capable of vertical takeoff or landing is prohibited.
2. **Short Term Rentals.** Short Term Rentals are prohibited.
3. **Garage Doors**. The width of an attached garage facing the street may not exceed fifty percent (50%) of the width of the front facade of the house. The width of the garage is equal to the width of the garage door, or in the case of multiple garage doors, the sum of the widths of each garage door plus the width of any intervening wall elements between garage doors. Each lot shall be limited to a maximum of two (2) large "RV-style" garage doors facing the street.

(Ord. 2015-02, 02/10/15)

SECTION 2: **AMENDMENT** "3.03.100 Special Provisions" of the Alpine City Development Code is hereby *amended* as follows:

AMENDMENT

3.03.100 Special Provisions

1. **Heliports**. The installation of a heliport for the use of a helicopter or other manned rotary wing aircrafts capable of vertical takeoff or landing is prohibited.
2. **Short Term Rentals.** Short Term Rentals are prohibited.
3. **Garage Doors**. The width of an attached garage facing the street may not exceed fifty percent (50%) of the width of the front facade of the house. The width of the garage is equal to the width of the garage door, or in the case of multiple garage doors, the sum of the widths of each garage door plus the width of any intervening wall elements between garage doors. Each lot shall be limited to a maximum of two (2) large "RV-style" garage doors facing the street.

(Ord. 95-24, 11/14/95; Ord. 2014-11, 6/24/14)

SECTION 3: **AMENDMENT** "3.04.100 Special Provisions" of the Alpine City Development Code is hereby *amended* as follows:

AMENDMENT

3.04.100 Special Provisions

1. **Heliports**. The installation of a heliport for the use of a helicopter or other manned rotary wing aircrafts capable of vertical takeoff or landing is prohibited.
2. **Short Term Rentals**. Short Term Rentals are prohibited.
3. **Garage Doors**. The width of an attached garage facing the street may not exceed fifty percent (50%) of the width of the front facade of the house. The width of the garage is equal to the width of the garage door, or in the case of multiple garage doors, the sum of the widths of each garage door plus the width of any intervening wall elements between garage doors. Each lot shall be limited to a maximum of two (2) large "RV-style" garage doors facing the street.

(CR-1 Created by Ord. 91-01, 4/9/91 and amended by Ord. 95-04, 2/3/95; Ord. 2014-11, 6/24/14)

SECTION 4: **AMENDMENT** "3.05.100 Special Provisions" of the Alpine City Development Code is hereby *amended* as follows:

AMENDMENT

3.05.100 Special Provisions

1. **Heliports**. The installation of a heliport for the use of a helicopter or other manned rotary wing aircrafts capable of vertical takeoff or landing is prohibited.
2. **Short Term Rentals**. Short Term Rentals are prohibited.
3. **Garage Doors**. The width of an attached garage facing the street may not exceed fifty percent (50%) of the width of the front facade of the house. The width of the garage is equal to the width of the garage door, or in the case of multiple garage doors, the sum of the widths of each garage door plus the width of any intervening wall elements between garage doors. Each lot shall be limited to a maximum of two (2) large "RV-style" garage doors facing the street.

(Ord. 95-28, 11/28/95)

PASSED AND ADOPTED BY THE ALPINE CITY COUNCIL
_____.

	AYE	NAY	ABSENT	ABSTAIN
Lon Lott	_____	_____	_____	_____
Carla Merrill	_____	_____	_____	_____
Gregory Gordon	_____	_____	_____	_____
Jason Thelin	_____	_____	_____	_____
Jessica Smuin	_____	_____	_____	_____

Presiding Officer

_____
Troy Stout, Mayor, Alpine City

Attest

_____
Bonnie Cooper, City Recorder Alpine City

ALPINE CITY
ORDINANCE 2020-20

AN ORDINANCE ADOPTING AMENDMENTS TO ARTICLE 3.02.090, 3.03.100, 3.04.100 AND 3.05.100 OF THE ALPINE CITY DEVELOPMENT CODE PERTAINING TO GARAGE DOOR RESTRICTIONS.

WHEREAS, The City Council of Alpine, Utah has deemed it in the best interest of Alpine City to amend the ordinance to set forth restrictions for garage doors on a home in Alpine City; and

WHEREAS, > the Alpine City Planning Commission has reviewed the proposed Amendments to the Development Code, held a public hearing, and has forwarded a recommendation to the City Council; and

WHEREAS, the Alpine City Council has reviewed the proposed Amendments to the Development Code:

NOW THEREFORE, be it ordained by the Council of Alpine City, in the State of Utah, as follows: The amendments to Article 3.02.090, 3.03.100, 3.04.100 and 3.05.100 contained in the attached document will supersede Article 3.02.090, 3.03.100, 3.04.100 and 3.05.100 as previously adopted. This ordinance shall take effect upon posting.

SECTION 1: **AMENDMENT** "3.02.090 Special Provisions" of the Alpine City Development Code is hereby *amended* as follows:

AMENDMENT

3.02.090 Special Provisions

1. **Heliports**. The installation of a heliport for the use of a helicopter or other manned rotary wing aircrafts capable of vertical takeoff or landing is prohibited.
2. **Short Term Rentals.** Short Term Rentals are prohibited.
3. **Garage Doors**. The width of an attached garage facing the street may not exceed fifty percent (50%) of the width of the front facade of the house. The width of the garage is equal to the width of the garage door, or in the case of multiple garage doors, the sum of the widths of each garage door plus the width of any intervening wall elements between garage doors. Each lot shall be limited to a maximum of two (2) large "RV-style" garage doors facing the street.

(Ord. 2015-02, 02/10/15)

SECTION 2: **<u>AMENDMENT</u>** "3.03.100 Special Provisions" of the Alpine City Development Code is hereby *amended* as follows:

AMENDMENT

3.03.100 Special Provisions

1. **Heliports**. The installation of a heliport for the use of a helicopter or other manned rotary wing aircrafts capable of vertical takeoff or landing is prohibited.
2. **Short Term Rentals.** Short Term Rentals are prohibited.
3. **Garage Doors**. The width of an attached garage facing the street may not exceed fifty percent (50%) of the width of the front facade of the house. The width of the garage is equal to the width of the garage door, or in the case of multiple garage doors, the sum of the widths of each garage door plus the width of any intervening wall elements between garage doors. Each lot shall be limited to a maximum of two (2) large "RV-style" garage doors facing the street.

(Ord. 95-24, 11/14/95; Ord. 2014-11, 6/24/14)

SECTION 3: **<u>AMENDMENT</u>** "3.04.100 Special Provisions" of the Alpine City Development Code is hereby *amended* as follows:

AMENDMENT

3.04.100 Special Provisions

1. **Heliports**. The installation of a heliport for the use of a helicopter or other manned rotary wing aircrafts capable of vertical takeoff or landing is prohibited.
2. **Short Term Rentals**. Short Term Rentals are prohibited.
3. **Garage Doors**. The width of an attached garage facing the street may not exceed fifty percent (50%) of the width of the front facade of the house. The width of the garage is equal to the width of the garage door, or in the case of multiple garage doors, the sum of the widths of each garage door plus the width of any intervening wall elements between garage doors. Each lot shall be limited to a maximum of two (2) large "RV-style" garage doors facing the street.

(CR-1 Created by Ord. 91-01, 4/9/91 and amended by Ord. 95-04, 2/3/95; Ord. 2014-11, 6/24/14)

SECTION 4: **<u>AMENDMENT</u>** "3.05.100 Special Provisions" of the Alpine City Development Code is hereby *amended* as follows:

AMENDMENT

3.05.100 Special Provisions

1. **Heliports**. The installation of a heliport for the use of a helicopter or other manned rotary wing aircrafts capable of vertical takeoff or landing is prohibited.
2. **Short Term Rentals**. Short Term Rentals are prohibited.
3. **Garage Doors**. The width of an attached garage facing the street may not exceed fifty percent (50%) of the width of the front facade of the house. The width of the garage is equal to the width of the garage door, or in the case of multiple garage doors, the sum of the widths of each garage door plus the width of any intervening wall elements between garage doors. Each lot shall be limited to a maximum of two (2) large "RV-style" garage doors facing the street.

(Ord. 95-28, 11/28/95)

PASSED AND ADOPTED BY THE ALPINE CITY COUNCIL
_____.

	AYE	**NAY**	**ABSENT**	**ABSTAIN**
Lon Lott	_____	_____	_____	_____
Carla Merrill	_____	_____	_____	_____
Gregory Gordon	_____	_____	_____	_____
Jason Thelin	_____	_____	_____	_____
Jessica Smuin	_____	_____	_____	_____

Presiding Officer

_____
Troy Stout, Mayor, Alpine City

Attest

_____
Bonnie Cooper, City Recorder Alpine City

ALPINE PLANNING COMMISSION AGENDA

SUBJECT: Discussion – Ordinance 2020-21 Trail Committee

FOR CONSIDERATION ON: 6 October 2020

PETITIONER: Staff

ACTION REQUESTED BY PETITIONER: Review and discuss the proposed ordinance.

BACKGROUND INFORMATION:

Staff have prepared a draft ordinance and are seeking feedback from the Planning Commission. If the Planning Commission approves of the proposed ordinance a public hearing will be scheduled for the following meeting.

STAFF RECOMMENDATION:
Review and discuss the proposed ordinance.

(DRAFT) TRAILS ADVISORY COMMITTEE

Sec. ???. - **Creation; composition; appointment; compensation**.

(a) There is hereby established an advisory committee to be known as the "Alpine City Trails Advisory Committee."

(b) The committee shall derive its authority from, and be administered by, the City Council.

(c) The committee shall be appointed by the City Council and shall consist of five voting members and two non-voting members as follows:

(1) Five citizens of Alpine City with preference given to the following makeup:

a. One representative from Alpine City Planning Commission or Alpine City Council;

b. Four citizens at large and one citizen who is interested in equestrian activities.

(2) The representative of the city planning department shall be a nonvoting member;

(3) A representative of the city public works department, who shall be a nonvoting member; and

(d) The voting members of the committee shall be appointed for terms of four years; provided, however, that city officials and employees who serve in their official capacity on the committee shall be exempt from the term limitations pursuant to subsection 2-306(b); and provided further that the first appointed members shall have staggered terms with three citizen members being appointed for four years; and two citizen members being appointed for three years.

(e) The members of the committee shall serve without compensation.

Sec. ???. - **Removal of members**.

Any member of the committee may be removed by majority vote (3 votes) of the committee.

Sec. ???. - **Election of officers; adoption of rules and regulations; meetings**.

(a) The committee shall elect annually a chairman, a vice-chairman, and a secretary from among its members.

(b) The committee shall establish its own set of bylaws, rules and regulations. The bylaws, rules and regulations shall be adopted by a 2/3 vote of the members present at any regular or special meeting of the committee at which a quorum is present. A quorum shall be deemed to consist of a majority of the voting members of the committee.

(c) The committee shall meet several times a year and shall determine its meeting schedule, including the number of meetings, dates, times, and places. The committee shall also meet at least twice annually with appropriate city staff to discuss prioritization of facilities.

Sec. ???. - **Duties and purpose**.

The committee shall act in an advisory capacity to the City Council in carrying out the City Trail Master Plan adopted by the City Council, and such other duties as may be assigned to the committee by the City Council, and shall make its recommendations to the City Council.

ALPINE CITY PLANNING COMMISSION AGENDA

SUBJECT: Discussion – Training Materials

FOR CONSIDERATION ON: 6 October 2020

PETITIONER: Chair of Planning Commission

ACTION REQUESTED BY PETITIONER: Review and discuss draft training materials.

BACKGROUND INFORMATION:

In July 2020, City Councilwoman Jessica Smuin shared training videos from the Land Use Academy of Utah with the Planning Commission. Planning Commissioner Alan MacDonald has since drafted training material, based on the videos, for discussion.

The Planning Commission briefly discussed this item at the August 18, 2020 Planning Commission meeting. The item was tabled and Jane Griener, Chair of the Planning Commission, asked that the Planning Commission go through the document and make notes and any additions that would improve the document and it would return for further discussion. The item was again tabled at the September 15, 2020 meeting to allow time for the Planning Commission to review the Rules of Order adopted in 2019.

STAFF RECOMMENDATION:
Review and discuss draft training materials.

ALPINE CITY PLANNING COMMISSION
Rules of Order

Recognizing the Planning Commission needs a systematic way of doing business, this document outlines rules of procedure to provide for the orderly conduct of City business by the Planning Commission, with the objective of providing for full, open, and comprehensive debate of issues brought before the Planning Commission for action in a forum open to the public, and which encourages citizens' awareness of Planning Commission activities.

The following may be referred to as the Alpine City's Rules of Order. Each Rule is followed by a recommended Procedure and Purpose to explain the Rule and guide the Chair and Commission members in its intended application.

RULE NO. 1: **The meeting is governed by the agenda and the agenda constitutes the Planning Commission's agreed-upon roadmap for the meeting.**

PROCEDURE. Each agenda item can be handled by the Chair in the following basic format:

First, the Chair should clearly announce the agenda item and should clearly state what the agenda item subject is.

Second, following that agenda format, the Chair should invite the appropriate person or persons to report on the item, including any recommendation that they might have. The appropriate person or persons may be the Chair, a member of the Planning Commission, a staff person, or an invited person charged with providing input on the agenda item.

Third, the Chair should ask members of the Planning Commission if they have any technical questions of clarification. At this point, members of the Planning Commission may ask clarifying questions to the person or persons who reported on the item, and that person or persons should be given time to respond.

Fourth, the Chair should invite public comments if at a formal public hearing and should open the public hearing for public input. If numerous members of the public indicate a desire to speak to the subject, the Chair may limit the time of public speakers. At the conclusion of the public comments, the Chair should announce that the public hearing is closed. For a regularly scheduled agenda item, the Chair may invite public comment.

Fifth, the Chair should invite a motion. The Chair should announce the name of the member of the Planning Commission who makes the motion.

Sixth, the Chair should determine if any member of the Planning Commission wishes to second the motion. The Chair should announce the name of the member of the

Planning Commission who seconds the motion. If there is no second then the item will be deemed concluded without decision

Seventh, if the motion is made and seconded, the Chair should make sure everyone understands the motion. This is done in one of three ways: (1) The Chair can ask the maker of the motion to repeat it. (2) The Chair can repeat the motion. (3) The Chair can ask the person taking minutes to repeat the motion.

Eighth, the Chair should now invite discussion of the motion by the Planning Commission. If there is no desired discussion, or after the discussion has ended, the Chair should announce that the Planning Commission will vote on the motion. If there has been no discussion or very brief discussion, then the vote on the motion should proceed immediately and there is no need to repeat the motion. If there has been substantial discussion, then it is normally best to make sure everyone understands the motion by repeating it.

Ninth, the Chair should announce the result of the vote and should announce what action (if any) the Planning Commission has taken.

PURPOSE OF THE RULE: All meetings must comply with the Utah Open and Public Meetings Act which requires that a notice and an agenda for a public meeting be prepared in advance of the meeting and that no final action be taken on any item that is not on the agenda. In addition the Act requires that the minutes of the meeting contain certain minimum information including the name of any member of the Planning Commission speaking on an issue, the substance of what the member says, an accurate description of any action taken by the Planning Commission and the voting record of each individual member of the Planning Commission.

RULE NO 2: Any matter that requires a Planning Commission decision shall be brought before the Planning Commission by motion.

PROCEDURE. The procedure for any motion shall be as follows: First, the Chair should recognize the member of the Planning Commission. Second, the member of the Planning Commission makes a motion by preceding the member's desired approach with the words: "I move . . . . "
So, a typical motion might be: "I move that we give the City Attorney a raise in pay."

The Chair usually initiates the motion by either (1) Inviting the members of the Planning Commission to make a motion. "A motion at this time would be in order." (2) Suggesting a motion to the members of the Planning Commission. "A motion would be in order that we give the City Attorney a raise in pay." (3) Making the motion. As noted, the Chair has every right as a member of the Planning Commission to make a motion, but should normally do so only if the Chair wishes to make a motion on an item but is convinced that no other member of the Planning Commission is willing to step forward to do so at a particular time. (4) Reading a motion suggested by the City Staff.

PURPOSE OF THE RULE. The purpose of this rule is to limit items under discussion to those and only those that the Planning Commission members want to discuss; give clarity as to what is being decided; and to make sure everyone,

including the person taking the minutes actually knows and can remember what the ultimate outcome of any discussion and debate is.

RULE NO 3: One question at a time and one speaker at a time.

PROCEDURE: Only one question will be discussed at a time. The question may have several motions.

There will only be one speaker at a time. Anyone who wishes to speak must raise their hand first after the current speaker finishes. The Chair will call upon the person by name. Once a member has been recognized, he has been granted "the floor" and may begin speaking. The speaker may not be interrupted except as allowed by these rules.

If a Planning Commission member wishes to ask a question during their time and retain the floor to speak after the question has been answered they may indicate so before posing the question by saying something similar to "I have additional comments and wish to retain the floor after this question has been answered."

PURPOSE OF THE RULE. The purpose is to focus on only one question and to allow Planning Commission members the ability to express their points of consideration without losing their train of thought and to completely finish without fear of interruption.

RULE NO 4: The Chair may use General Consent (also known as Unanimous Consent) with all motions.

PROCEDURE: When the Chair feels the Planning Commission is all in agreement, the Chair asks if there are any objections to the motion to amend, withdraw, or any motions in Rule No. 7. The Chair pauses and if there are no objections states that the motion is approved. If there is any objection then the motion is put to a regular vote. A Planning Commission member may object simply because he or she feels it is important to have a formal vote.

Example: The Chair states, "If there is no objection, we will recess for 10 minutes, [pause to see if any member objects]. There being no objection, we will recess for 10 minutes.

If a member objects by stating, "I object" the matter is then put to a vote.

The Chair states, "An objection being made, the question is shall we recess for 10 minutes? As many as are in favor, say Aye. Those opposed, say No. The Ayes have it and we will recess for 10 minutes."

PURPOSE OF THE RULE. General consent is helpful in expediting general routine business or when the Chair senses the Planning Commission is in agreement. General consent allows flexibility of the rules while protecting the right of the majority to decide and the minority to be heard.

RULE NO 5: There are only three basic forms of motions allowed: Initial Motions, Motions to Amend, and Substitute Motions.

PROCEDURE: The initial motion. The initial motion is the one that puts forward an item for the Planning Commission's consideration. An initial motion might be: "I move that we give the City Attorney a pat on the back."

The motion to amend**.** If a member wants to change the initial motion that is before the Planning Commission, they would move to amend it. A motion to amend might be: "I move that we amend the motion to give the attorney a kick in the butt." A motion to amend takes the initial motion which is before the Planning Commission and seeks to change it in some way. The motion to amend must be germane to the initial motion. The motion to amend must not be the same as a negative vote on the initial motion.

The substitute motion. If a member wants to completely do away with the initial motion that is before the Planning Commission, and put a new motion before the Planning Commission, they would move a substitute motion. A substitute motion might be: "I move a substitute motion that we get a new City Attorney."

PURPOSE OF THE RULE. "Motions to amend" and "substitute motions" are often confused. But they are quite different, and their effect (if passed) is quite different. A motion to amend seeks to retain the basic motion on the floor, but modify it in some way. A substitute motion seeks to throw out the basic motion on the floor, and substitute a new and different motion for it. The decision as to whether a motion is really a "motion to amend" or a "substitute motion" is left to the Chair. So that if a member makes what that member calls a "motion to amend", but the Chair determines that it is really a "substitute motion", then the Chair's designation governs.

RULE NO 6. There can be up to three motions on the floor at the same time and no more than three. The Chair can reject a fourth motion until the Chair has dealt with the three that are on the floor and has resolved them.

*PROCEDURE***:** When there are two or three motions on the floor (after motions and seconds) at the same time, the vote should proceed first on the last motion that is made. So, for example, assume the first motion is a basic "motion to give the City Attorney a pat on the back." During the discussion of this motion, a member might make a second motion to "amend the main motion to give the City Attorney a kick in the butt." And perhaps, during that discussion, a member makes yet a third motion as a "substitute motion that we just get rid of the City Attorney." The proper procedure would be as follows:

First, the Chair would deal with the third (the last) motion on the floor, the substitute motion. After discussion and debate, a vote would be taken first on the third motion. If the substitute motion passed, it would be a substitute for the basic motion and would eliminate it. The first motion would be moot, as would the second motion (which sought to amend the first motion), and the action on the agenda item would be completed on the passage by the Planning Commission of the third motion (the substitute motion). No vote would be taken on the first or second motions. On the

other hand, if the substitute motion (the third motion) failed then the Chair would proceed to consideration of the second (now, the last) motion on the floor, the motion to amend.

Second, if the substitute motion failed, the Chair would now deal with the second (now, the last) motion on the floor, the motion to amend. The discussion and debate would focus strictly on the amendment (should the City Attorney be kicked in the butt). If the motion to amend passed the Chair would now move to consider the main motion (the first motion) as amended. If the motion to amend failed the Chair would now move to consider the main motion (the first motion) in its original format, not amended.

Third, the Chair would now deal with the first motion that was placed on the floor. The original motion would either be in its original format (pat on the back), or, if amended, would be in its amended format (kick in the butt). And the question on the floor for discussion and decision would be what part of the City Attorney's anatomy would be subject to assault.

PURPOSE OF THE RULE: Too many motions on the same subject can cause confusion as to what the end result is and in the official record. Limiting the number of motions to no more than three at a time, allows for enough debate and parliamentary maneuvering to satisfy those who want to be clever while allowing the slow to still keep up.

RULE NO 7: The debate can continue as long as members of the Planning Commission wish to discuss an item, subject to the Chair determining it is time to move on and take action by using General Consent to limit debate or by a proper motion by a Planning Commission member to limit the debate. The following motions are not debatable—a motion to adjorn; a motion to recess; a motion to fix a time to adjourn; a motion to table; and a motion to limit debate.

PROCEDURE. There are exceptions to the general rule of free and open debate on motions. The exceptions all apply when there is a desire of the Planning Commission to move on. The following motions are not debatable (that is, when the following motions are made and seconded, the Chair must immediately call for a vote of the Planning Commission without debate on the motion):

A motion to adjourn. This motion, if passed, requires the Planning Commission to immediately adjourn to its next regularly scheduled meeting. It requires a simple majority vote.

A motion to recess. This motion, if passed, requires the Planning Commission to immediately take a recess. The length should be set in the motion which may be a few minutes or an hour. It requires a simple majority vote.

A motion to fix the time to adjourn. This motion, if passed, requires the Planning Commission to adjourn the meeting at the specific time set in the motion. For example, the motion might be: "I move we adjourn this meeting at midnight." It requires a simple majority vote.

A motion to table. This motion, if passed, requires discussion of the agenda item to be halted and the agenda item to be placed on "hold". The motion can contain a specific time in which the item can come back to the Planning Commission: "I move we table this item until our regular meeting in October." Or the motion can contain no specific time for the return of the item, in which case the matter will not be placed back on an agenda for a future Planning Commission meeting except at the order of the Chair or the request of any two Planning Commission members. A motion to table an item requires a simple majority vote.

A motion to limit debate. The most common form of this motion is to say: "I move the previous question" or "I move the question" or "I call the question." When a member of the Planning Commission makes such a motion, the member is really saying: "I've had enough debate. Let's get on with the vote". When such a motion is made, the Chair should ask for a second, stop debate, and vote on the motion to limit debate. The motion to limit debate requires a simple majority vote of the Planning Commission.

PURPOSE OF THE RULE. Debate and discussion are important until they are not. When a matter is chewed on enough it should be swallowed. This rule allows the Chair by General Consent or the majority of the Planning Commission to end the debate, after a reasonable time. It also keeps those in a minority position on an issue from filibustering until they get their way.

RULE NO 8: The Chair and Planning Commission members shall adhere to the code of conduct.

PROCEDURE. The Chair, as chair of the meeting, is primarily responsible to see that debate and discussion of an agenda item focuses on the agenda item and the policy in question, not the personalities of the members of the Planning Commission. There are, however, exceptions that are intended to assist the Chair in keeping order to the meeting. A speaker may be interrupted by a Planning Commission member only for the following reasons and in the form set forth below:

*Privilege***.** The proper interruption would be: "point of privilege." The Chair would then ask the interrupter to "state your point." Appropriate points of privilege relate to anything that would interfere with the normal comfort or safety of the meeting or when the reputation of the Planning Commission or any individual is at stake. For example, the room may be too hot or too cold, a blowing fan might interfere with a person's ability to hear, or the speaker may be misrepresenting an individual's remarks

Order. The proper interruption would be: "point of order." Again, the Chair would ask the interrupter to "state your point." Appropriate points of order relate to anything that would not be considered appropriate conduct of the meeting. For example, if the Chair moved on to a vote on a motion that permits debate without allowing that discussion or debate.

Appeal. If the Chair makes a ruling that a member of the Planning Commission disagrees with, that member may appeal the ruling of the Chair. If the motion is

seconded, and after debate, if it passes by a simple majority vote, then the ruling of the Chair is deemed reversed.

Call for orders of the day. This is simply another way of saying, "Let's return to the agenda." If a member believes that the Planning Commission has drifted from the agreed-upon agenda, such a call may be made. It does not require a vote, and when the Chair discovers that the agenda has not been followed, the Chair simply reminds the Planning Commission to return to the agenda item properly before them. If the Chair fails to do so, the Chair's determination may be appealed.

Withdraw a motion. To withdraw a motion, the maker of the motion on the floor states, "I request that my motion be withdrawn." The motion to withdraw a motion requires a simple majority vote.

*PURPOSE OF THE RULE***.** Debate and discussion should be focused, but free and open. In the interest of time, the Chair may, however, limit the time allotted to speakers, including members of the Planning Commission. A Planning Commission member may continue speaking on a majority vote of the Planning Commission. The rules of order are meant to create an atmosphere where the members of the Planning Commission and the members of the public can attend to business efficiently, fairly and with full participation. At the same time, it is up to the Chair and the members of the Planning Commission to maintain common courtesy and decorum. Only one person at a time will have the floor and every speaker must be recognized by the Chair before proceeding to speak.

RESIDENTS' RIGHT TO BE HEARD:

It is the Planning Commission's goal that residents of the City resolve their complaints for service or regarding employees' performance at the staff level. However, it is recognized that residents may from time to time believe it is necessary to speak to Planning Commission on matters of concern. Accordingly, the Planning Commission expects any person presenting to the Planning Commission to speak in a civil manner, with due respect for the decorum of the meeting, and with due respect for all persons attending.

- No member of the public shall be heard until recognized by the Chair.
- Public comments will only be heard during the Public Comment portion of the meeting unless the issue is a Public Hearing or a member of the public is asked to speak on a matter by the Chair.
- Speakers must state their name and address for the record.
- Any resident requesting to speak shall limit him or herself to matters of fact regarding the issue of concern.
- Comments should be limited to three (3) minutes unless prior approval by the Chair.
- If a representative is elected to speak for a group, the Chair may approve an increased time allotment.

- Personal attacks made publicly toward any person or city employee are not allowed. Speakers are encouraged to bring their complaints regarding employee performance through the supervisory chain of command in accordance with the City's Personnel Policies.
- Any member of the public interrupting Planning Commission proceedings, approaching the dais without permission, otherwise creating a disturbance, or failing to abide by these rules of procedure in addressing Planning Commission, shall be deemed to have disrupted a public meeting and, at the direction of the Chair, shall be removed from Planning Commission chambers by Police Department personnel or other agent designated by Planning Commission or City Manager.

[Initial Draft: For Review and Comment Only]

ALPINE CITY PLANNING COMMISSION

Training Materials

PART 1. What Hat Do We Wear?

All local land use and zoning decisions involve three areas of decision-making:

- Legislative decisions
- Administrative decisions
- Quasi-judicial decisions

Legislative function: Makes the law. This requires taking policy (what local citizens want) and turning those desires into law, in the form of ordinances. Examples include changing the general plan, adopting or amending ordinances, and annexation. Only an elected body such as a City Council has the authority to pass laws. However, it is the job of a Planning Commission to create and recommend a General Plan to the City Council. It is also a core duty of a Planning Commission to create and recommend changes to zoning and land use ordinances.

Administrative function: Applies the law. This arises once ordinances are passed. It applies these ordinances to different individuals and circumstances. For example, if a land use application is made, the administrative role is to apply the existing land-use law to that application. There are no policy considerations in an administrative function; it is assumed those decisions were already made in the legislative process. Examples include subdivision applications, conditional use permits and building permits. Administrative decision can be made by any party that the legislative body appoints, often in the form of city officials and/or a Planning Commission.

Quasi-judicial function: Interprets the law. This function arises when a dispute over the law or its application occurs. Local governments typically appoint a person or body to handle this role, known as a local appeal authority.

PART 2. Planning Commission: How to Apply the Law to Our Decisions and Meetings

The duties of a Planning Commission include both legislative and administrative functions (if delegated to it.) The three main duties of a Planning Commission are to:

1. Create and recommend changes to the General Plan
2. Create and recommend changes to Ordinances
3. Handle assigned administrative matters if delegated to do so

Create a General Plan. Utah law states that a Planning Commission's duty is to make a General Plan, and amendments thereto, and recommend the Plan (or amendments) to the City Council.

The Plan is the Commission's recommendation for what a community should be. It is an ongoing process that requires work, time and care. This duty to plan represents one part of a Planning Commission's legislative role. The Commission is helping to make the law.

Create Zoning and Ordinance Changes. The second duty, after planning, is to make recommendations to the City Council regarding zoning and land use ordinance changes. This is also a legislative role. Zoning decisions and amending the code make the law. The Planning Commission's job is to discuss, consider, draft and recommend land use regulations and amendments. By law, a City Council may not adopt or amend a land use regulation without a recommendation from a Planning Commission. Refining the City's land use code is a constant, ongoing effort to make it better, clearer, easier, and compliant with ever-changing state law.

A properly functioning Planning Commission will spend most of its time on these two legislative roles.

Handle Administrative Matters if Delegated. Planning Commission's role may be to make administrative decisions. These decisions do not change the law, but merely apply it to individual land use applications such as conditional use applications or subdivision approvals. The Planning Commission only has these administrative functions if the City Council has delegated them. City staff can also fill this role. It is up to the City Council to decide what works best.

Administrative functions are important, but they are not the core role of a Planning Commission. Nothing in the state code gives the administrative role to a Planning Commission; however, if that role is given in the local code, it must be done promptly, diligently and in careful accordance with the law.

PART 3. Working with Public Input

The power of a local government to make and enforce land-use laws is not inherent. It is specifically delegated to them by the state. Land use power is derived from the police power, to protect the health, safety and welfare of the citizens. The local government, however, has great discretion to decide what it wants its town to be, and accordingly what zoning and land use laws it will adopt. Our system gives local governments power to tell people what they can or can't do on their land, in the interests of the public good. However, to do this, the Council must formally pass ordinances and abide by them in uniform decision-making.

With regard to public hearing requirements, state law makes a distinction between legislative and administrative functions.

Legislative function. The public's role in this process is critical. The City Council is a legislative body, elected by and accountable to the public, and they should listen to the public tell them what they want their town to be. Thus, when a legislative decision is being made, the public has a right to speak. Likewise, state law requires that a Planning Commission hold at least one public

hearing when considering a legislative decision or function. The public must be allowed to speak in any meeting designated for a public hearing.

Administrative function. State law does not require a public hearing for administrative decisions. It only requires a public meeting. However, a local ordinance may require a public hearing for administrative functions. Public opinion is relevant for legislative decisions, but not for administrative functions. The only relevant consideration for administrative application of an ordinance is whether the proposed use or application complies with the ordinance. If it does, the answer is yes. Administrative decisions must be based on substantial evidence.

What should a Planning Commission do when the public shows up clamoring over an administrative decision? Recommended options:

1. Not hold a public hearing for every administrative action, unless required by local ordinance.
2. Make sure we, as a Commission, understand the difference between public clamor and evidence.
3. Try to educate the public regarding their role and how to best fulfill it. Educate the public on the difference between legislative and administrative functions. Let the public know that clamor is unhelpful at the administrative stage. Evidence, not opinion, is what is required.

In summary, opinion is helpful and encouraged on legislative functions. However, as to administrative decisions, only substantial evidence should matter to the Commission as it seeks to apply the law to the situation. Managing this process and avoiding making administrative decisions based on public clamor is one of the best ways to make a correct and legally supportable decision.

THE PLANNING COMMISSION

ONE ATTORNEY'S VIEW

BY DAVID L. CHURCH

2007

One of the most important elements of local government in Utah is the planning commission. Members of planning commissions by in large are dedicated volunteers who perform this service out of love for their community and interest in subject. However, for some reason planning commissions and some planning commissioners are always in disputes with their city or town council or with the land owners who have to deal with them. This is unfortunate and in my view is a product of misunderstanding the role of the planning commission and its members.

Every Utah city and town is required to pass an ordinance establishing a planning commission[1]. The ordinance must define the number and terms of the members and alternate members if any. In addition the ordinance should indicate the mode of appointment. This implies that perhaps someone other than the mayor (or the city manager in the city manager optional form of government) could be given the right to appoint planning commission members by the ordinance. I do not believe this would be a proper interpretation. Mayors or city managers, depending on the form of government in the city, clearly have the statutory authority to appoint, with the advice and consent of councils, persons to the city commissions including the planning commission.[2]

To be consistent with the other provisions of the Utah Municipal Code, the mode of appointment of planning commissioners in the ordinance would have to be limited to things other than the power of appointment. The ordinance must also contain the procedures for filling vacancies and removal from office. This has been an overlooked provision is most ordinances and the source of some contention and even law suits. The best practice is to make this section fairly specific and have definite standards of conduct and attendance for commission members. Without these specifics it may be difficult to remove members from a commission prior to the expiration of their term in office.

The ordinance should also detail the authority of the authority of the planning commission. Every planning commission is given some minimal authority under state law. This authority given by state law cannot be taken from the planning commission by the city or town council. This minimum authority consists of making a recommendation to the city or town council for a general plan and amendments to the general plan and recommendations to the city or town council land use ordinances, zoning maps, official maps, annexation policy plans and amendments to these ordinances. The commission must hold public hearings in these areas as well. The planning commission must also be involved in making recommendations on proposed subdivision plats.

1 Utah Code 10-9a-301

2 Utah Code sections 10-3-809(2)(h), 10-3-1219(d), and 10-9-1226(2)(7)

No other powers or duties need be given to the planning commission by the city or town and the planning commission does not have any other inherent powers. Many commissions try to involve themselves in matters such as business licensing, animal regulations and nuisance enforcement. This is appropriate only of the city or town ordinances delegate these responsibilities to them.

The city and town land use ordinances must identify a land use authority and an appeal authority for every land use decision applying the adopted city or town land use ordinances.[3] Their can be several land use authorities in a town or city.

The planning commission may be designated in the land use ordinances as the land use authority in the city for making all or specific land use decisions or they may be designated as the appeal authority for appeals from land use decisions, but the planning commission cannot be the deciding authority and the appeal authority on the same issues. For example if the planning commission is given by the city or town ordinance the authority to review and approve site plans then some other person or body must be given the authority to appeal the decisions of the planning commission on site plans.

The ordinance setting up the planning commission should also establish the details of how the commission operates and the rules of procedure of the planning commission. The ordinance may also fix per diem compensation for the members of the planning commission, based on necessary and reasonable expenses and on meetings actually attended. This section of state law should be read to say that planning commissioners may be reimbursed for their services but it is not paid employment.

It is not uncommon for members of a planning commission to get "cross wise" with the city or town council. This is understandable since the primary purpose of the planning commission is to make reasoned recommendations to the council about the general plan and the land use ordinances, but the city or town council is under no obligation to take the recommendations of the planning commission. It is not a rare occurrence for members of a planning commission to become invested in their recommendations. These recommendations are the product of long public processes and hard decision making. It can appear disrespectful to the process and the efforts of the planning commission when the council ignores the recommendations of the planning commission and goes off on its own. There is no solution to this source of conflict. Decisions regarding the general plan and the adoption of land use ordinances are legislative acts that are intended to be made by elected policy makers and not by appointed commissioners. Council members must always respect the recommendation of the planning commissions, but in the end they need to vote for their own constituents according to their own consciences.

It is also not uncommon for city and town councils to become frustrated with their own planning commissions. This is generally not because of any recommendation made by the planning commission, but when the commission is acting as a land use authority and granting or denying permits and approvals. The principle source of this frustration is a planning commission's attempt to exercise discretion in granting or denying these

[3] Utah Code section 10-9a-302.

permits. Utah law is very clear that a landowner is entitled to approval of a land use application if the application complies with the city or town's ordinance.[4] It is also specifically stated in Utah law that a land use authority cannot impose any requirement on an applicant for a land use permit that is not specifically expressed in either state law or local ordinances.[5] In addition the law states that if a proposed subdivision, with limited exceptions, complies with the city or town ordinances, it must be approved.[6] What all this means is that the planning commission, when acting as a land use authority, has very little discretion on whether or not to grant or deny the permit. If the land owner's application complies with the ordinances the commission must approve it, and if it does not comply then the planning commission must deny the application. This is regardless of whether or not the planning commission, or the public, thinks that the application is a good or bad idea. In addition if the city or town ordinances are ambiguous they must be interpreted by the city or town in favor of the land owner.[7] When a planning commission ignores the law and approves (or denies) a land use application in violation of the city or town ordinances it just makes trouble and unnecessary conflict for the city or town council. This type of trouble they always resent.

There are, I believe, some basic rules for members of a planning commission to follow that will help the planning process and avoid conflict between the planning commissions and the city or town councils.

First, planning commissioners must understand and appreciate the dual role that they may play. When they are a making a recommendation on a general plan or on a land use ordinance they are a part of the political, legislative process. They have broad discretion in what their recommendation can be. The can listen to the public even if it is just uneducated clamor. When the planning commission is acting as a land use authority it has little discretion. They are acting in an administrative capacity. The land owner's application either complies with the ordinances or it does not. An individual planning commissioner's opinion of the merits of a proposed land use application is not relevant to the process. Any individual commissioner's opinion, and any public's comments and concerns, are relevant only to the extent that they speak to issue of compliance with the existing law.

Second, planning commissioners must understand that the planning commission is intended to shape policy not make policy. It is not a representative body and has no constituency. Commissioners do not represent neighborhoods and are not gate keepers. Their role is to be experts in planning and the local ordinances. They are to make reasoned recommendations and apply the ordinances as written. If a planning commissioner wants to be a policy maker he or she just needs to put their names on a

---

4 Utah Code section 10-9a-509(1)(a)

5 Utah Code section 10-9a-509(1)(c)

6 Utah Code section 10-9a-603(2)

7 Brown v. Sandy City Bd. of Adjustment, 957 P.2d 207, 210 (Utah Ct. App. 1998) and Patterson v. Utah County Bd. of Adjustment, 893 P.2d 602, 606 (Utah Ct.App.1995).

ballot and win an election. Until they do so they should not attempt to make policy. They should be content with just shaping policy.

Third, planning commissioners should respect the public process and the due process rights of the land owners. All meetings of the planning commission must comply with the Utah Open and Public Meetings Act.[8] This means that both decisions and deliberations of a planning commission must be public.

A public hearing is required by law for many things that a planning commission may be involved in and can be held by many planning commissions on other matters as a matter or routine. The purpose of a public hearing is to receive information from and give information to the public. A hearing is held within a public meeting for a specified time. It is not to seek the public's approval or permission to do something. In my opinion it is never appropriate to poll the members of the public in attendance at a meeting to see what they think. The people in attendance at any meeting are not necessarily representative of the residents of the city or town as a whole. They are at the meeting because they have a position that is so strongly held that they will leave their TV's and come to a meeting. While what they say matters, the volume and number of repetitions does not. A public hearing should be a time that the planning commission listens and learns. It is not a time to convince or argue with the public.

Procedural due process requires that an applicant for any permit be given notice of any meeting regarding his or her application; the right to be heard; and a fair hearing or decision. Utah law requires that the applicant be given specific notice of the date, time and place of any meeting where the application is being considered and also be given copies of any staff reports regarding the application at least three days before the meeting or hearing.[9]

Lastly, it is important to remember that being on a planning commission is about public service. One of the primary roles of a planning commission is to help the landowner accomplish with his land what the landowner desires, in a manner consistent with the city's plans and ordinances. Many planning commissioners seem to delight in frustrating the plans of the landowner. They take delight in telling people no—instead of how. Some planning commissioners feel that it is their role to force an applicant to do what the commissioner would do if the commissioner owned the property. These attitudes do not serve the public.

A planning commission fulfills its purpose when it acts in a manner supportive of the policy and policy makers. It is not intended to be adversarial to the council. It is not a check or balance to the council. It is not there to slow growth or frustrate land owners. It is there to add professionalism, fairness and common sense to the planning and land use control process. It only serves this valuable function when works within the constraints of the law and without regard to public prejudice and the clamor of the crowd.

---

8 Utah Code sections 52-4-1 et. seq

9 Utah Code sections 10-9a-202.

ALPINE PLANNING COMMISSION AGENDA

SUBJECT: Planning Commission Minutes September 15, 2020

FOR CONSIDERATION ON: 6 October 2020

PETITIONER: Staff

ACTION REQUESTED BY PETITIONER: Approve Minutes

BACKGROUND INFORMATION:

Minutes from the September 15, 2020 Planning Commission Meeting.

STAFF RECOMMENDATION:

Review and approve the Planning Commission Minutes.

ALPINE CITY PLANNING COMMISSION MEETING
Alpine City Hall, 20 North Main, Alpine, UT
September 15, 2020

I. GENERAL BUSINESS

A. Welcome and Roll Call: The meeting was called to order at 7:00 p.m. by Chairwoman Jane Griener. The following were present and constituted a quorum:

Chairwoman: Jane Griener
Commission Members: Ethan Allen, John MacKay, Troy Slade, Sylvia Christiansen, Ed Bush
Excused: Alan MacDonald

Staff: Austin Roy, Jed Muhlestein, Marla Fox
Others:

B. Prayer/Opening Comments: John MacKay
C. Pledge of Allegiance: Jane Griener

II. PUBLIC COMMENT

There were no public comments.

III. ACTION ITEMS

A. Public Hearing – General Plan – Transportation Element

Austin Roy, City Planner, said on July 14, 2020, the City Council adopted Resolution 2020-09, which began the process of amending the City's General Plan and land use ordinances as they pertain to streets and roads going in and out of the City. On August 4, 2020, the Planning Commission discussed new language for the Transportation Element of the General Plan. The City Attorney has reviewed the proposed language and provided feedback. Based on that feedback the Planning Commission has drafted a new Transportation Element of the General Plan. The Planning Commission will hold a public hearing on the proposed Transportation Element of the General Plan and make a recommendation to City Council.

Jane Griener opened the Public Hearing. There were no comments and Jane Griener closed the Public Hearing.

Austin Roy read the proposed language of 1.6 to read: *Limit intermunicipal street connections to existing planned connections only. Ensure that street connections to other municipalities outside the City Boundaries are compatible with the goals and policies of the General Plan, require City Council approval, and include required updates to the General Plan, Street master Plan, and applicable ordinances.*

Troy Slade asked what the Austin Roy said the City Attorney said to not include unincorporated County street connections.

MOTION: Sylvia Christiansen moved to recommend that the Transportation Element of the General Plan be approved as proposed.

Ed Bush seconded the motion. There were 6 Ayes and 0 Nays (recorded below). The motion passed unanimously.

Ayes:	**Nays:**
Ethan Allen	
Sylvia Christiansen	
Ed Bush	
Troy Slade	
Jane Griener	
John MacKay	

B. Discussion – Training Materials

Austin Roy said in July 2020, City Councilwoman Jessica Smuin shared training videos from the Land Use Academy of Utah with the Planning Commission. Planning Commissioner Alan MacDonald has since drafted training material, based on the videos, for discussion.

The Planning Commission briefly discussed this item at the August 18, 2020 Planning Commission meeting. The item was tabled and Jane Griener, Chair of the Planning Commission, asked that the Planning Commission go through the document and make notes and any additions that would improve the document and it would return for further discussion.

Austin Roy said Alan MacDonald sent some new material for the Planning Commission to review. Part of this includes Robert's Rules of Order.

Jane Griener said we need to look at the Rules of Order Alpine City has adopted because she doesn't like making a motion first and then having a discussion about it after. She said it's hard to vote on issues when it hasn't been talked about. Sylvia Christiansen agreed.

Austin Roy said this is a living document and the Planning Commission should discuss the rules once a year and retrain on them and make changes as needed.

Jane Griener said we should get on the Ombudsman schedule for January. She said we also need to see what the dates are for conferences for the Planners Association and see who can attend. Austin Roy said the Land Use group also has trainings he would look into. Jane Griener asked the Planning Commission if they hear of any good classed that could be good for us to go to to help us be more educated and do our job better, that would be great.

C. Discussion – Building Code and Ordinance Issues – Outdoor Lighting

Austin Roy said Mayor Stout has asked that the Planning Commission review and discuss potential building code and ordinance issues with the goal of protecting the qualities of Alpine City and its neighborhoods for the future. In this discussion, the Planning Commission will be looking at outdoor lighting and dark sky ordinances as a continuation of the discussion from the September 1, 2020 Planning Commission Meeting.

Austin Roy said that Ed Bush put together some additional information from examples from Highland, Lehi and Pleasant Grove.

DRAFT

In the last discussion on outdoor lighting, the Planning Commission came up with a list of potential items to include in the ordinance. These items include:

1) restrict or limit lighting on sport courts,
2) light curfew: all lights be off after midnight (with an exception for security lights that have motion sensors and timers), and
3) dark sky standard for City streetlights.

Cities with dark sky ordinances include: Torrey, UT; Springdale, UT; Jackson, WY; Kanab, UT; Ogden Valley, UT; Ketchum, ID; Aspen, CO; and Goleta, CA (http://darkskystudies.org/lighting-ordinances).

Jane Griener asked if we had a cost to exchange the streetlights. Jed Muhlestein said they are expensive but are approximately the same cost as our current lights. Other cities will change out a light when one goes out and not all at once to minimize the cost up front.

Sylvia Christiansen said she is in favor of changing out the streetlights. She said she'll find out more about the dark sky designation for cities.

Troy Slade asked if the pole has to be changed out or just the fixture. Jed Muhlestein said we would only change the fixture. He said we would want to keep the decorative Alpine City light fixtures and would have to find a company that could do that for us.

The Planning Commission agreed that they wanted to move forward with changing streetlights to dark sky lights when they go out and to also have this type of light installed in new developments.

The Planning Commission had a discussion about sports court lighting. Austin Roy said we currently don't have a lighting ordinance. Jane Griener said we should have an ordinance for outdoor yard lighting.

Sylvia Christiansen said she liked the verbiage from Highland City to say lights should be shielded or recessed and lighting pointing downward as to not shine in neighbor's property. Staff said it's a good idea to have an ordinance to shut lights out at midnight but not require a permit for lighting.

The Planning Commission talked about Christmas lights and solar lights. John MacKay said the light ordinance should only apply to sports court lighting. Jane Griener said we should do an educational program to make residents aware of light pollution.

Ed Bush said some parents want to keep the lights on for family members coming home late. Troy Slade asked if there had been many complaints. Austin Roy said there has only been one complaint about one house. Ed Bush said he thought midnight was too late and would compromise at 11:00 pm.

Jane Griener said she didn't know how we would enforce home lighting.

IV. Communication

Austin Roy said the City is updating the Trail Master Plan.

Jane Griener asked when the Planning Commission could go on a field trip to the Bangerter property to get an idea on the layout and size and how it joins into 800 South. John MacKay asked if it was appropriate for the landowner to ask us what the City wants or what we'll approve. Ethan Allen said it seems like we're getting ahead of ourselves when we don't know what direction this property is going in.

DRAFT

Austin Roy said the landowners could sell the property as is but they are asking the City if we're interested in more commercial property and re-zoning before the property is sold. They are just trying to look forward to see what the needs of the City are.

Jane Griener said she thought it would be productive to visit the property to see what the possibilities could be for future planning. She wanted to see what the City Council thought about it.

V. APPROVAL OF PLANNING COMMISSION MINUTES: September 1, 2020

MOTION: Sylvia Christiansen moved to approve the minutes for September 1, 2020, with corrections from Ed Bush.

Change Ed Bush to Pledge of Allegiance instead of Troy Slade.

Troy Slade seconded the motion. There were 6 Ayes and 0 Nays (recorded below). The motion passed unanimously.

Ayes:	**Nays:**
Ethan Allen	None
Jane Griener	
Sylvia Christiansen	
Troy Slade	
Ed Bush	
John MacKay	

MOTION: Ed Bush moved to adjourn. Ethan Allen seconded the motion. The motion passed unanimously.

Ayes:	**Nays:**
Ethan Allen	None
Jane Griener	
Sylvia Christiansen	
Troy Slade	
Ed Bush	
John MacKay	

The meeting was adjourned at 8:32 p.m.

DRAFT