ALPINE CITY PLANNING COMMISSION MEETING

NOTICE is hereby given that the **PLANNING COMMISSION** of Alpine City, UT will hold a **Regular Meeting at Alpine City Hall,** 20 North Main, Alpine, Utah on **Tuesday, November 12, 2019 at 7:00 pm** as follows:

I. GENERAL BUSINESS

A. Welcome and Roll Call: David Fotheringham
B. Prayer/Opening Comments: Bryce Higbee
C. Pledge of Allegiance: By Invitation

II. PUBLIC COMMENT

Any person wishing to comment on any item not on the agenda may address the Planning Commission at this point by stepping to the microphone and giving his or her name and address for the record.

III. ACTION ITEMS

A. Amendment to Development Code – Fences on Retaining Walls
Planning Commission will discuss changes to the original proposal to amend the fence ordinance per request of the City Council and make a new recommendation.

B. Public Hearing – Major Subdivision Concept – Anson Farmstead Subdivision – Breezy Anson
Planning Commission will hold a public hearing, review plans and make a recommendation to City Council.

C. Public Hearing – Alpine City Standards, Specifications and Details
Planning Commission will hold a public hearing, review plans and make a recommendation to City Council.

IV. COMMUNICATIONS

V. APPROVAL OF PLANNING COMMISSION MINUTES: October 15, 2019

ADJOURN

Chairman David Fotheringham
November 12, 2019

THE PUBLIC IS INVITED TO ATTEND ALL PLANNING COMMISSION MEETINGS. If you need a special accommodation to participate in the meeting, please call the City Recorder's Office at 801-756-6347 ext. 5.

CERTIFICATION OF POSTING. The undersigned duly appointed recorder does hereby certify that the above agenda notice was posted at Alpine City Hall, 20 North Main, Alpine, UT. It was also sent by e-mail to The Daily Herald located in Provo, UT a local newspaper circulated in Alpine, UT. This agenda is also available on the City's web site at www.alpinecity.org and on the Utah Public Meeting Notices website at www.utah.gov/pmn/index.html.

PUBLIC MEETING AND PUBLIC HEARING ETIQUETTE

Please remember all public meetings and public hearings are now recorded.

- All comments **must** be recognized by the Chairperson and addressed through the microphone.
- When speaking to the Planning Commission, please stand, speak slowly and clearly into the microphone, and state your name and address for the recorded record.
- Be respectful to others and refrain from disruptions during the meeting. Please refrain from conversation with others in the audience as the microphones are very sensitive and can pick up whispers in the back of the room.
- Keep comments constructive and not disruptive.
- Avoid verbal approval or dissatisfaction of the ongoing discussion (i.e., booing or applauding).
- Exhibits (photos, petitions, etc.) given to the City become the property of the City.
- Please silence all cellular phones, beepers, pagers or other noise making devices.
- Be considerate of others who wish to speak by limiting your comments to a reasonable length, and avoiding repetition of what has already been said. Individuals may be limited to two minutes and group representatives may be limited to five minutes.
- Refrain from congregating near the doors or in the lobby area outside the council room to talk as it can be very noisy and disruptive. If you must carry on conversation in this area, please be as quiet as possible. (The doors must remain open during a public meeting/hearing.)

Public Hearing vs. Public Meeting

If the meeting is a **public hearing**, the public may participate during that time and may present opinions and evidence for the issue for which the hearing is being held. In a public hearing there may be some restrictions on participation such as time limits.

Anyone can observe a **public meeting**, but there is no right to speak or be heard there - the public participates in presenting opinions and evidence at the pleasure of the body conducting the meeting.

ALPINE PLANNING COMMISSION AGENDA

SUBJECT: Amendment to Development Code – Fences on Retaining Walls

FOR CONSIDERATION ON: 12 November 2019

PETITIONER: City Council

ACTION REQUESTED BY PETITIONER: Recommend approval of proposed change.

BACKGROUND INFORMATION:

In October 2019 the Planning Commission recommended an amendment to the ordinance regarding fences on retaining walls. The City Council reviewed the proposed change and decided to send the item back to Planning Commission for additional changes. In particular, the City Council feels that privacy fences on retaining walls should be permitted, but only when adjacent property owners agree. The idea is to prevent a resident from building a tall wall with a privacy fence without neighbor consent.

Staff have drafted new language which meets the City Councils objective for Planning Commission review.

STAFF RECOMMENDATION:
Recommend approval of the proposed amendment to the Development Code.

SAMPLE MOTION TO APPROVE:
I motion to recommend that the proposed amendments to Article 3.21.060 of the Development Code be approved as proposed.

SAMPLE MOTION TO APPROVE WITH CONDITIONS:
I motion to recommend that the proposed amendments to Article 3.21.060 of the Development Code be approved with the following conditions/changes:

- ***Insert Finding***

SAMPLE MOTION TO DENY:
I motion to recommend that the proposed amendments to Article 3.21.060 of the Development Code be denied based on the following:

- ***Insert Finding***

ALPINE CITY
ORDINANCE 2019-20

AN ORDINANCE ADOPTING AMENDMENTS TO ARTICLE 3.21.060 OF THE ALPINE CITY DEVELOPMENT CODE PERTAINING TO FENCES, WALLS AND HEDGES.

WHEREAS, The Alpine City Council has deemed it in the best interest of Alpine City to amend the Fences, Walls and Hedges ordinance; and

WHEREAS, the Alpine City Planning Commission has reviewed the proposed Amendments to the Development Code, held a public hearing, and has forwarded a recommendation to the City Council; and

WHEREAS, the Alpine City Council has reviewed the proposed Amendments to the Development Code:

NOW THEREFORE, be it ordained by the Council of Alpine City, in the State of Utah, as follows: The amendments to Article 3.21.060 contained in the attached document will supersede Article 3.21.060 as previously adopted. This ordinance shall take effect upon posting.

SECTION 1: **AMENDMENT** "3.21.060 Fences, Walls And Hedges" of the Alpine City Development Code is hereby *amended* as follows:

BEFORE AMENDMENT

3.21.060 Fences, Walls And Hedges

1. **Requirement**. All fences must be approved by the planning and zoning department and a building permit obtained.
2. **Front Yard Fences**. Privacy fences, walls and hedges along the street frontage of a lot shall not exceed 3 feet in height when placed within 10 feet of the front property line. Open style fences shall not exceed 4 feet in height when placed within 10 feet of the front property line. Front yard fences may be eight (8) feet in height if they are placed at least 10 feet back from the front property line.
3. **Interior Side Yard Fences**. Fences alongside yards shall not exceed 3 feet in height for privacy fences and 4 feet in height for open style fences when they are within 10 feet of the front property line. Side yard fences may be eight (8) feet in height when they are located at least 10 feet back from the front property line.
4. **Rear Yard Fences**. A rear yard fence may be eight (8) feet in height.

5. **Corner Lot Fences within the Sight Triangle**. The sight triangle on corner lots shall not be obstructed. Privacy fences, walls, or hedges shall not exceed three (3) feet in height, and open-style fences shall not exceed four (4) feet in height, when located within the sight triangle on a corner lot. The sight triangle is defined as the area formed by connecting the corner of the property to points 35 feet back along each property line abutting the street.
6. **Corner Lot Fences outside the Sight Triangle**. Side yard fences abutting the street may be eight (8) feet in height when they are located at least 35 feet back from the front property line, outside the sight triangle. For interior side fence see DCA 3.21.060 Part 2.
7. **Fences on Retaining Walls**. Under no condition shall a fence and wall exceed nine (9) feet on the same plane. If a privacy fence that is on top of a retaining wall would exceed nine (9) feet, the fence shall be set back at least four (4) feet from the back side of the retaining wall. Open style fences including but not limited to rail fences, field fences, or chain link fences are permitted to be on the same plane as a retaining wall.
8. **Agricultural Fences**. Fences on property where an identifiable commercial agricultural product is produced shall not exceed eight (8) feet in height, and shall be an open style fence.
9. **Fences Along Public Open Space and Trails**. See DCA 3.16, DCA 3.16.100 Part 1 and DCA 3.17 and DCA 3.17.100 Part 3,a.

   Fences or borders along property lines adjacent to a trail or open space must meet with the City Planner and meet specific standards.
   a. When the width of the open space or trail easement is less than 50 feet, bordering fences may not exceed eight (8) feet in height, and shall not obstruct visibility. (Open style fences such as rail fences, field fence, or chain link are preferable.)
   b. When the width of the open space or trail easement is 50 feet or more, fence standards as specified elsewhere in this ordinance apply.
   c. Fences and hedges must be completely within the boundaries of the private property.
   d. Hedges or shrubs must be maintained to the same height requirements as fences.
   e. The owner of the fence or hedge must maintain the side facing the open space.
10. **Conditional Uses for Interior Fences**. A conditional use permit may be approved by the City Planner for an interior fence over eight (8) feet in height for such things as sports courts, gardens and swimming pools. A conditionally approved interior fence shall not exceed twelve (12) feet in height and shall be an open style fence. (Ord. No. 2015-06, 05/26/15)

(amended by Ord. No. 2005-02, 2/8/05; Ord. No. 2013-10, 7/9/13; Ord. No. 2015-06, 05/26/15; Ord. No. 2017-01, 01/10/17; Ord. No. 2017-13, 06/27/17)

AFTER AMENDMENT

3.21.060 Fences, Walls And Hedges

1. **Requirement**. All fences must be approved by the planning and zoning department and a building permit obtained. Fences, walls and hedges must be completely within the boundaries of the private property.
2. **Front Yard Fences**. Privacy fences, walls and hedges along the street frontage of a lot shall not exceed 3 feet in height when placed within 10 feet of the front property line. Open style fences shall not exceed 4 feet in height when placed within 10 feet of the front property line. Front yard fences may be eight (8) feet in height if they are placed at least 10 feet back from the front property line.
3. **Interior Side Yard Fences**. Fences alongside yards shall not exceed 3 feet in height for privacy fences and 4 feet in height for open style fences when they are within 10 feet of the front property line. Side yard fences may be eight (8) feet in height when they are located at least 10 feet back from the front property line.
4. **Rear Yard Fences**. A rear yard fence may be eight (8) feet in height.
5. **Corner Lot Fences within the Sight Triangle**. The sight triangle on corner lots shall not be obstructed. Privacy fences, walls, or hedges shall not exceed three (3) feet in height, and open-style fences shall not exceed four (4) feet in height, when located within the sight triangle on a corner lot. The sight triangle is defined as the area formed by connecting the corner of the property to points 35 feet back along each property line abutting the street.
6. **Corner Lot Fences outside the Sight Triangle**. Side yard fences abutting the street may be eight (8) feet in height when they are located at least 35 feet back from the front property line, outside the sight triangle. For interior side fence see DCA 3.21.060 Part 2.
7. **Fences on Retaining Walls**. ~~Under no condition shall a fence and wall exceed nine (9) feet on the same plane.~~ If a privacy fence that is on top of a retaining wall would exceed a total combined height of nine (9) feet on the same plane~~, then~~ the fence shall be set back at least four (4) feet from the back side of the retaining wall unless adjacent property owners agree in writing to allow a privacy fence. Open style fences including but not limited to rail fences, field fences, or chain link fences are permitted to be on the same plane as a retaining wall.
8. **Agricultural Fences**. Fences on property where an identifiable commercial agricultural product is produced shall not exceed eight (8) feet in height, and shall be an open style fence.
9. **Fences Along Public Open Space and Trails**. See DCA 3.16, DCA 3.16.100 Part 1 and DCA 3.17 and DCA 3.17.100 Part 3,a.

   Fences or borders along property lines adjacent to a trail or open space must meet with the City Planner and meet specific standards.
   a. When the width of the open space or trail easement is less than 50 feet, bordering fences may not exceed eight (8) feet in height, and shall not obstruct visibility. (Open style fences such as rail fences, field fence, or chain link are preferable.)
   b. When the width of the open space or trail easement is 50 feet or more, fence standards as specified elsewhere in this ordinance apply.

c. Fences and hedges must be completely within the boundaries of the private property.
d. Hedges or shrubs must be maintained to the same height requirements as fences.
e. The owner of the fence or hedge must maintain the side facing the open space.

10. **Conditional Uses for Interior Fences**. A conditional use permit may be approved by the City Planner for an interior fence over eight (8) feet in height for such things as sports courts, gardens and swimming pools. A conditionally approved interior fence shall not exceed twelve (12) feet in height and shall be an open style fence. (Ord. No. 2015-06, 05/26/15)

(amended by Ord. No. 2005-02, 2/8/05; Ord. No. 2013-10, 7/9/13; Ord. No. 2015-06, 05/26/15; Ord. No. 2017-01, 01/10/17; Ord. No. 2017-13, 06/27/17)

PASSED AND ADOPTED BY THE ALPINE CITY COUNCIL _____.

	AYE	**NAY**	**ABSENT**	**ABSTAIN**
Lon Lott	_____	_____	_____	_____
Kimberly Bryant	_____	_____	_____	_____
Carla Merrill	_____	_____	_____	_____
Ramon Beck	_____	_____	_____	_____
Jason Thelin	_____	_____	_____	_____

Presiding Officer

_____
Troy Stout, Mayor, Alpine City

Attest

_____
Charmayne G. Warnock, City Recorder Alpine City

ALPINE CITY
ORDINANCE 2019-20

AN ORDINANCE ADOPTING AMENDMENTS TO ARTICLE 3.21.060 OF THE ALPINE CITY DEVELOPMENT CODE PERTAINING TO FENCES, WALLS AND HEDGES.

WHEREAS, The Alpine City Council has deemed it in the best interest of Alpine City to amend the Fences, Walls and Hedges ordinance; and

WHEREAS, the Alpine City Planning Commission has reviewed the proposed Amendments to the Development Code, held a public hearing, and has forwarded a recommendation to the City Council; and

WHEREAS, the Alpine City Council has reviewed the proposed Amendments to the Development Code:

NOW THEREFORE, be it ordained by the Council of Alpine City, in the State of Utah, as follows: The amendments to Article 3.21.060 contained in the attached document will supersede Article 3.21.060 as previously adopted. This ordinance shall take effect upon posting.

SECTION 1: **AMENDMENT** "3.21.060 Fences, Walls And Hedges" of the Alpine City Development Code is hereby *amended* as follows:

A M E N D M E N T

3.21.060 Fences, Walls And Hedges

1. **Requirement**. All fences must be approved by the planning and zoning department and a building permit obtained. Fences, walls and hedges must be completely within the boundaries of the private property.
2. **Front Yard Fences**. Privacy fences, walls and hedges along the street frontage of a lot shall not exceed 3 feet in height when placed within 10 feet of the front property line. Open style fences shall not exceed 4 feet in height when placed within 10 feet of the front property line. Front yard fences may be eight (8) feet in height if they are placed at least 10 feet back from the front property line.
3. **Interior Side Yard Fences**. Fences alongside yards shall not exceed 3 feet in height for privacy fences and 4 feet in height for open style fences when they are within 10 feet of the front property line. Side yard fences may be eight (8) feet in height when they are located at least 10 feet back from the front property line.
4. **Rear Yard Fences**. A rear yard fence may be eight (8) feet in height.

5. **Corner Lot Fences within the Sight Triangle**. The sight triangle on corner lots shall not be obstructed. Privacy fences, walls, or hedges shall not exceed three (3) feet in height, and open-style fences shall not exceed four (4) feet in height, when located within the sight triangle on a corner lot. The sight triangle is defined as the area formed by connecting the corner of the property to points 35 feet back along each property line abutting the street.
6. **Corner Lot Fences outside the Sight Triangle**. Side yard fences abutting the street may be eight (8) feet in height when they are located at least 35 feet back from the front property line, outside the sight triangle. For interior side fence see DCA 3.21.060 Part 2.
7. **Fences on Retaining Walls**. If a privacy fence that is on top of a retaining wall would exceed a total combined height of nine (9) feet on the same plane the fence shall be set back at least four (4) feet from the back side of the retaining wall unless adjacent property owners agree in writing to allow a privacy fence. Open style fences including but not limited to rail fences, field fences, or chain link fences are permitted to be on the same plane as a retaining wall.
8. **Agricultural Fences**. Fences on property where an identifiable commercial agricultural product is produced shall not exceed eight (8) feet in height, and shall be an open style fence.
9. **Fences Along Public Open Space and Trails**. See DCA 3.16, DCA 3.16.100 Part 1 and DCA 3.17 and DCA 3.17.100 Part 3,a.

   Fences or borders along property lines adjacent to a trail or open space must meet with the City Planner and meet specific standards.
   a. When the width of the open space or trail easement is less than 50 feet, bordering fences may not exceed eight (8) feet in height, and shall not obstruct visibility. (Open style fences such as rail fences, field fence, or chain link are preferable.)
   b. When the width of the open space or trail easement is 50 feet or more, fence standards as specified elsewhere in this ordinance apply.
   c. Fences and hedges must be completely within the boundaries of the private property.
   d. Hedges or shrubs must be maintained to the same height requirements as fences.
   e. The owner of the fence or hedge must maintain the side facing the open space.
10. **Conditional Uses for Interior Fences**. A conditional use permit may be approved by the City Planner for an interior fence over eight (8) feet in height for such things as sports courts, gardens and swimming pools. A conditionally approved interior fence shall not exceed twelve (12) feet in height and shall be an open style fence. (Ord. No. 2015-06, 05/26/15)

(amended by Ord. No. 2005-02, 2/8/05; Ord. No. 2013-10, 7/9/13; Ord. No. 2015-06, 05/26/15; Ord. No. 2017-01, 01/10/17; Ord. No. 2017-13, 06/27/17)

PASSED AND ADOPTED BY THE ALPINE CITY COUNCIL
_____.

	AYE	NAY	ABSENT	ABSTAIN
Lon Lott	_____	_____	_____	_____
Kimberly Bryant	_____	_____	_____	_____
Carla Merrill	_____	_____	_____	_____
Ramon Beck	_____	_____	_____	_____
Jason Thelin	_____	_____	_____	_____

Presiding Officer

_____
Troy Stout, Mayor, Alpine City

Attest

_____
Charmayne G. Warnock, City Recorder Alpine City

ALPINE PLANNING COMMISSION AGENDA

SUBJECT: **Public Hearing – Major Subdivision Concept Plan – Anson Farmstead Subdivision**

FOR CONSIDERATION ON: **12 November 2019**

PETITIONER: **Breezy Anson**

ACTION REQUESTED BY PETITIONER: **Recommend approval of the Anson Farmstead Subdivision Concept Plan.**

BACKGROUND INFORMATION:

The Anson Farmstead Subdivision consists of 10 lots on 13.59 acres. The development is located at approximately 487 Westfield Road, and in the CR 40,000 zone. The concept plan shows a connection to the Alpine View Estates Subdivision on the north end of the property. The proposed concept and number of lots is based on bonus density that would be received from a Planned Residential Development (PRD). PRD status is dependent on a recommendation of from Planning Commission and approval by City Council.

STAFF RECOMMENDATION:

Review staff report and findings and make a recommendation, or decision to either approve or deny the proposed subdivision. Findings are outlined below.

SAMPLE MOTION TO APPROVE
I motion to approve the Anson Farmstead Subdivision concept plan with the following conditions:

- PRD status be approved by the City Council.

SAMPLE MOTION TO DENY
I motion that the Anson Farmstead Subdivision concept plan be denied based on the following:

- ***Insert Finding***

ALPINE CITY
STAFF REPORT
November 5, 2019

To: Alpine City Planning Commission & City Council

From: Staff

Prepared By: Austin Roy, City Planner
Planning & Zoning Department

Jed Muhlestein, City Engineer
Engineering & Public Works Department

Re: **Anson Farmstead Subdivision – CONCEPT**

Applicant:	Breezy Anson
Project Location:	487 Westfield Road
Zoning:	CR-40,000 Zone
Acreage:	13.59 Acres
Lot Number & Size:	10 lots ranging from 0.46 acres to 2.38 acres
Request:	Recommend and approve Concept Plan

SUMMARY

The Anson Farmstead Subdivision consists of 10 lots on 13.59 acres. The development is located at approximately 487 Westfield Road, and in the CR 40,000 zone. The concept plan shows a connection to the Alpine View Estates Subdivision on the north end of the property. The proposed concept and number of lots is based on bonus density that would be received from a Planned Residential Development (PRD). PRD status is dependent on a recommendation of from Planning Commission and approval by City Council.

BACKGROUND

The Anson Farmstead Subdivision property has been in the Anson family for many years. There is currently has a single home, barn and other accessory structures on the property. The Anson family worked with the developer of the Alpine View Estates Subdivision (new adjacent subdivision to the north) to make sure that both properties would tie in together, including the connection for Blue Spruce Road, connected open space, and a trail that provides a connection to Westfield Road through the Anson Property.

ANALYSIS

PRD Status and Requirements

"It shall be the City's sole discretion to decide if a project should be a PRD within the intent of the ordinance…the Planning Commission shall make a recommendation to the City Council and the City Council shall make the final decision in deciding whether a project should be a PRD prior to a concept approval being given" (Article 3.09.010.2). To qualify as a PRD, a project must demonstrate that it will:

a) Recognize and incorporate natural conditions of site;
b) Efficiently utilize land resources and benefit the public in delivery of utilities and services;
c) Help to provide variety to style of dwelling available;
d) Preserve open space for recreational, scenic and public service needs;
e) Be consistent with objectives of underlying zone.

The developer has proposed to preserve the hillsides located on the property as public open space. The PRD ordinance requires that a minimum of 25% of the overall property be dedicated as public open space. The concept plan shows 36.9% to be dedicated as public open space.

This proposed plan ties into utilities off 400 West and Whitby Woodlands Drive. See Engineering and Public Works Review for further details.

PRD status would allow smaller lots and higher density, which would allow for diversity of style of homes in the area.

Developer has proposed to leave the hillsides as open space, which could potentially be used for recreational or scenic purposes. The concept shows a trail alignment that would connect Westfield Road to the trails in the subdivision to the Alpine View Estates Subdivision to the north. Overall, the proposed concept seems to be consistent with the objectives of the underlying zone.

Planning Commission should review the above requirements for PRD and make recommendation, and City Council shall determine if the proposed subdivision qualifies as a PRD. Ultimately, the proposed plan only works as a PRD. If PRD status is not granted plans should be revised to meet the requirements of the underlying zone (CR-40,000).

Lot Width and Area

Lot width requirements for the CR-40,000 zone are 110 feet for a standard lot, and 80 feet for a cul-de-sac lot located on a curve. Lots located within a PRD shall have a width of not less than 90 feet (measured 30 feet back from the front property line) and the length of the front lot line abutting the City street shall not be less than 60 feet. The proposed lots appear to meet the lot width requirements for a PRD.

Lots in the CR-40,000 zone are required to be a minimum of 40,000 square feet in size. However, the Anson Farmstead Subdivision is being proposed as a PRD, which grants density bonuses for the dedication of public and/or private open space. According to a slope analysis of the property (see attached), they have a base density of 8 lots. With the dedication of the

appropriate amount of private open space, density would increase to 9 lots, and with the dedication of the appropriate amount of public open space, density would increase to 10 lots. The proposed concept appears to meet the density requirements set forth in the PRD ordinance.

Based on the plans, which show 36.9% of the land to be dedicate as open space, the proposed subdivision meets the 25% minimum for the zone and thus qualifies for a base density of 10 lots.

Use
The developer is proposing that the lots be used for single-unit detached dwellings, which is consistent with the permitted uses for the CR-20,000 zone.

Sensitive Lands (Wildland Urban Interface)
See the Engineering and Public Works, and the Lone Peak Fire Department Reviews below for further comments on sensitive lands requirements.

Trails
The City Trail Master Plan shows a private proposed trail through the development area. The concept plan has incorporated this trail into the plans. The trail from the Trail Master Plan was added after the Anson's and the developer of Alpine View Estates discussed the benefits of having a connected trail. One of the conditions of approval for Alpine View Estates was that they were able to connect their trail with the Anson Subdivision. The trail shown on the concept would fulfill the intentions of the proposed trail from the Trail Master Plan.

General Plan
The Street Master Plan, from the General Plan, shows a proposed new local street running through the Anson Farmstead Subdivision property, connecting West Blue Spruce Road with North Blue Spruce Road. The concept plan shows this street and has incorporated it into the overall plan for the subdivision.

Other
None.

REVIEWS

PLANNING AND ZONING DEPARTMENT REVIEW
The analysis section in the body of this report serves as the Planning and Zoning Department review.

ENGINEERING AND PUBLIC WORKS DEPARTMENT REVIEW

Streets
At Concept Engineering checks the streets for general compliance with the Street Master Plan. The plans show completion of a master planned residential street by connecting the northern section of Blue Spruce Rd to the southern portions of said road. A compliant cul-de-sac (less than 450 feet) is shown extending off the new section of Blue Spruce. The roads appear to meet

ordinance regarding width, length, and curvature. A more detailed review of roadway design is done at preliminary.

Lots

If the plan is approved to be developed as a PRD, Development Code section 3.09.040.3 has strict requirements regarding open space. In general, this section states that hazardous areas (rockfall, slide, flood, etc.) and areas containing slopes greater than 25% must be included in the open space areas. There is a 15% allowance per lot and each lot does meet the ordinance. The ordinance also states that "*Once a Concept Plan has been approved by the Planning Commission, lot lines of the approved concept plan may be adjusted by the City Engineer to square up the lot by straightening and eliminating multiple segmented property lines."* If approved as is, Engineering will work with the Developer to straighten up the lot lines on this plan as there are several areas with crooked lot lines. A cleaner version will come back at Preliminary.

Utilities – All

The utilities will be discussed at length at Preliminary Review. At concept the overall ability of the City to serve the area is evaluated. In this situation, the necessary infrastructure to serve the area exists on both the east and west sides of the development. The development is well below the 5,350-foot elevation, which is the highest elevation the existing water system can serve and still provide the minimum 40 psi required by ordinance. The master plans for all city utilities do account for the area. Horrocks Engineers has compared the plan to the water, sewer, and pressurized irrigation master plans and the plan fits well within the models.

Natural Hazards

The proposed development falls within the Geologic Hazards Overlay Zone which has areas identified as having the potential for rockfall, slide, fault, and debris flows. The Developer will be required to provide a hazard study that deems the proposed lots safe, or provides recommendations that would make building safe, at Preliminary Approval.

Other

The property has existing buildings onsite. Prior to the recordation of any phase of development that contains existing buildings which would be in conflict with property lines and setbacks, the existing building(s) must be removed, existing services either re-used or cut/capped/removed; or a bond provided to ensure those things will happen prior to a building permit being issued on the affected lot(s).

LONE PEAK FIRE DEPARTMENT REVIEW

See the attached review from the Lone Peak Fire Department.

HORROCKS ENGINEER'S REVIEW

See the attached review from Horrocks Engineering.

NOTICING

Notice has been properly issued in the manner outlined in City and State Code.

STAFF RECOMMENDATION

Review staff report and findings and make a recommendation, or decision to either approve or deny the proposed subdivision concept plan and PRD status. Findings are outlined below.

Findings for a Positive Motion:

A. The streets and general layout appear to meet ordinance;
B. Proposed roadway construction appears to meet Alpine City design standards;
C. Frontage improvements are shown throughout the development;
D. Plan appears to comply with the General Plan and Street Master Plan.
E. The property appears to meet the requirements of a PRD, based on slope analysis, lot width, and density requirements, as well as the other requirements including:
    a. Recognize and incorporate natural conditions of site;
    b. Efficiently utilize land resources and benefit the public in delivery of utilities and services;
    c. Help to provide variety to style of dwelling available;
    d. Preserve open space for recreational, scenic and public service needs;
    e. Be consistent with objectives of underlying zone.

Findings for Negative Motion:

A. None.

MODEL MOTIONS

SAMPLE MOTION TO APPROVE

I motion to approve the Anson Farmstead Subdivision concept plan with the following conditions:

- PRD status be approved by the City Council.

SAMPLE MOTION TO DENY

I motion that the Anson Farmstead Subdivision concept plan be denied based on the following:

- ***Insert Finding***

LONE PEAK FIRE DISTRICT
5582 PARKWAY WEST DRIVE
HIGHLAND, UTAH 84003
(801) 763-5365
WWW.LONEPEAKFIRE.COM

REED M. THOMPSON, FIRE CHIEF

MEMORANDUM

DATE: 31 October 2019

TO: Jed Muhlestein, City Engineer, Alpine City
CC: Austin Roy, City Planner, Alpine City

FROM: Reed M. Thompson, Fire Chief

SUBJECT: ANSON SUBDIVISION

In review of the proposed site development concept plan, a 3-page document (C1—Cover, C2—Photo, and C3—Slope) for "Anson Subdivision", dated 16 April 2019, listed as 487 Westfield Road, Alpine, Utah; please note:

- With the challenging slopes associated with Wildland Urban Interface firefighting, a gated access will be required for any fencing along Westfield Road of the proposed public open space (identified as Parcel A—4.60 Acres), allowing for access of firefighting apparatus and/or equipment.
- Language needs to identify that this project is within the Wildland Urban Interface and as such is subject to compliance with the Alpine City Sensitive Land Ordinance, and the WUI Site Plan/Development Review Guide with its associated survey.
- Completion of the Blue Spruce Road will complete connectivity for the area allowing multiple public safety access points. The cul-de-sac access and access road shall be an all-weather access road capable of sustaining the weight limits of fire apparatus as required in the current International Fire Code; paying special attention that road slopes do not exceed 10%.
- Any existing structures or other hazardous materials located on the property will need to be reviewed prior to demolition. If a structure is slated for demolition, it would be the desire of the fire district to utilize them for fire training prior to demolition and following any asbestos abatement.

If you have further questions regarding this information, please contact me directly.

HORROCKS ENGINEERS

To: **Jed Muhlestein**
Alpine City

From: **John E. Schiess, P.E.**

Date: Oct 1, 2019 **Memorandum**

Subject: **Anson Development Hydraulic Modeling Results and Recommendations**

The proposed Anson development consists of 10 residential lots between the east end of Blue Spruce Dr and Westfield Road.

The development proposes 10 culinary ERC's, 4.35 irrigated acres, and 10 sanitary sewer ERU's. The current master plan anticipated 9.7 culinary ERC's, 8.9 irrigated acres, and 9.7 sanitary sewer ERU's. Proposed connections fall well within the current master plans.

The proposed culinary water improvements have not been modeled at this time. The proposed improvements fit well within the City's culinary water master plan. The following comments and recommendations are noted for the proposed culinary water system.

The proposed pressurized irrigation improvements have not been modeled at this time. The proposed improvements fit well within the City's pressurized irrigation master plan. The following comments and recommendations are noted for the proposed pressurized irrigation system.

The proposed sanitary sewer improvements have not been modeled at this time. The proposed improvements fit well within the City's sanitary sewer master plan. The following comments and recommendations are noted for the proposed sanitary sewer system.

Recommendations:

1. Minimum pipe sizes are adequate.

Comments:

2. Fire flow available in the area surrounding the proposed improvements should be over 3000 gallons per minute at 20 psi for the proposed lines.

CR-40,000 Zone

Acreage	Acres	Total Square Feet
Property	13.59	591,987.35
Zone Total Acreage	**13.59**	

Slope Percentages	Percent Acres Within that range	SF within slope range	Acres within slope range	Required Acres per Lot	Allowed Lots for this range
0-9.99%	31.6%	187249.36	4.30	1.00	4.30
10-14.99%	16.1%	95067.36	2.18	1.50	1.45
15-19.99%	11.4%	67769.13	1.56	2.00	0.78
20-24.99%	9.8%	58145.12	1.33	3.00	0.44
25-29.99%	11.6%	68455.37	1.57	4.00	0.39
30%+	19.5%	115301.31	2.65	5.00	0.53
Totals	**100.0%**		**13.59**		
				Base Density	**8**
				Private Open Space (10% Max Bonus), PRD	**9**
				Public Open Space (25% Max Bonus), PRD	**10**

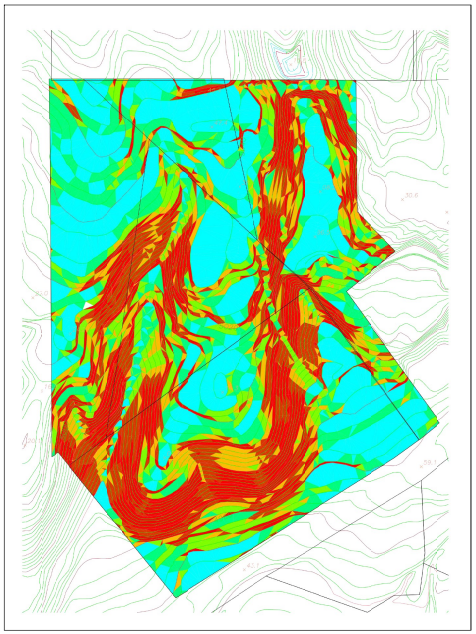

VICINITY MAP

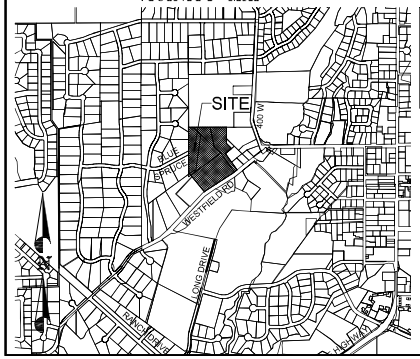

SLOPE LEGEND

Slopes Table

Number	Minimum Slope	Maximum Slope	Area	Color
1	0.00%	10.00%	187249.36	
2	10.00%	15.00%	95067.36	
3	15.00%	20.00%	67769.13	
4	20.00%	25.00%	58145.12	
5	25.00%	30.00%	68455.37	
6	30.00%	150.00%	115301.31	

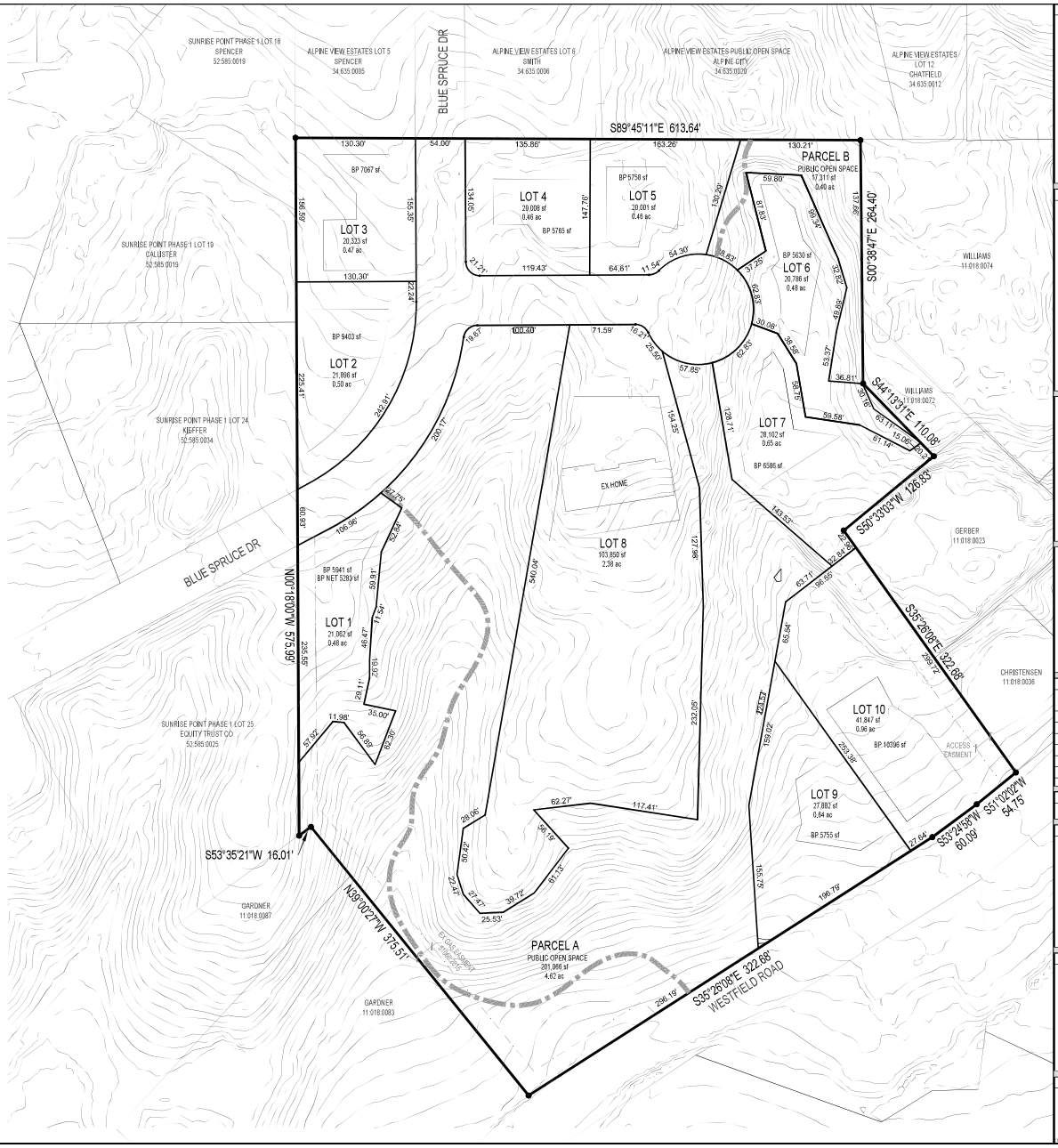

DEVELOPMENT

ANSON SUBDIVISION

487 WESTFIELD RD
ALPINE, UT

CR-40,000 ZONE
PRD PROPOSED

DEVELOPER

N

0 30 60 120 180

SCALE: 1"= 60'

berg CIVIL ENGINEERING
11038 N Highland Blvd Suite 400
Highland UT, 84003
office (801) 492-1277
cell (801) 616-1677

PROJECT STATUS			SEAL
NO.	DATE	DESCRIPTION	THIS DOCUMENT IS INCOMPLETE AND IS RELEASED TEMPORARILY FOR INTERIM REVIEW ONLY. IT IS NOT INTENDED FOR CONSTRUCTION, BIDDING, OR PERMIT PURPOSES.
1			
2			
3			
4			KENNETH R. BERG P.E.
5			SERIAL NO. 343602
6			DATE:
7			

ACTION	DATE
CONCEPT	10/31/19

PROJECT

ANSON SUBDIVISION

DESCRIPTION

CONCEPT PLAN

SHEET NAME	SHEET NUMBER
COVER	C1

My drive\eng\ch\C1\Bernard\anson c1-4\proj.dwg

SUBDIVISION TABULATIONS

DESCRIPTION	AREA (sf)	%
TOTAL PROJECT AREA	591,810	100.00%
PUBLIC OPEN SPACE	218,377	36.90%
DEDICATED RIGHT OF WAY	47,676	8.06%
LOT AREA	325,757	55.04%

VICINITY MAP

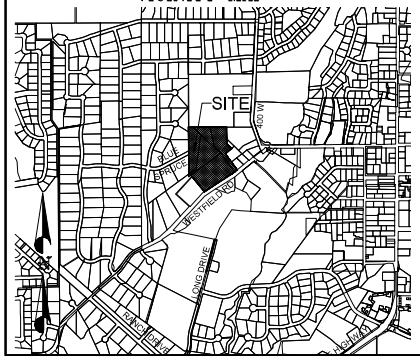

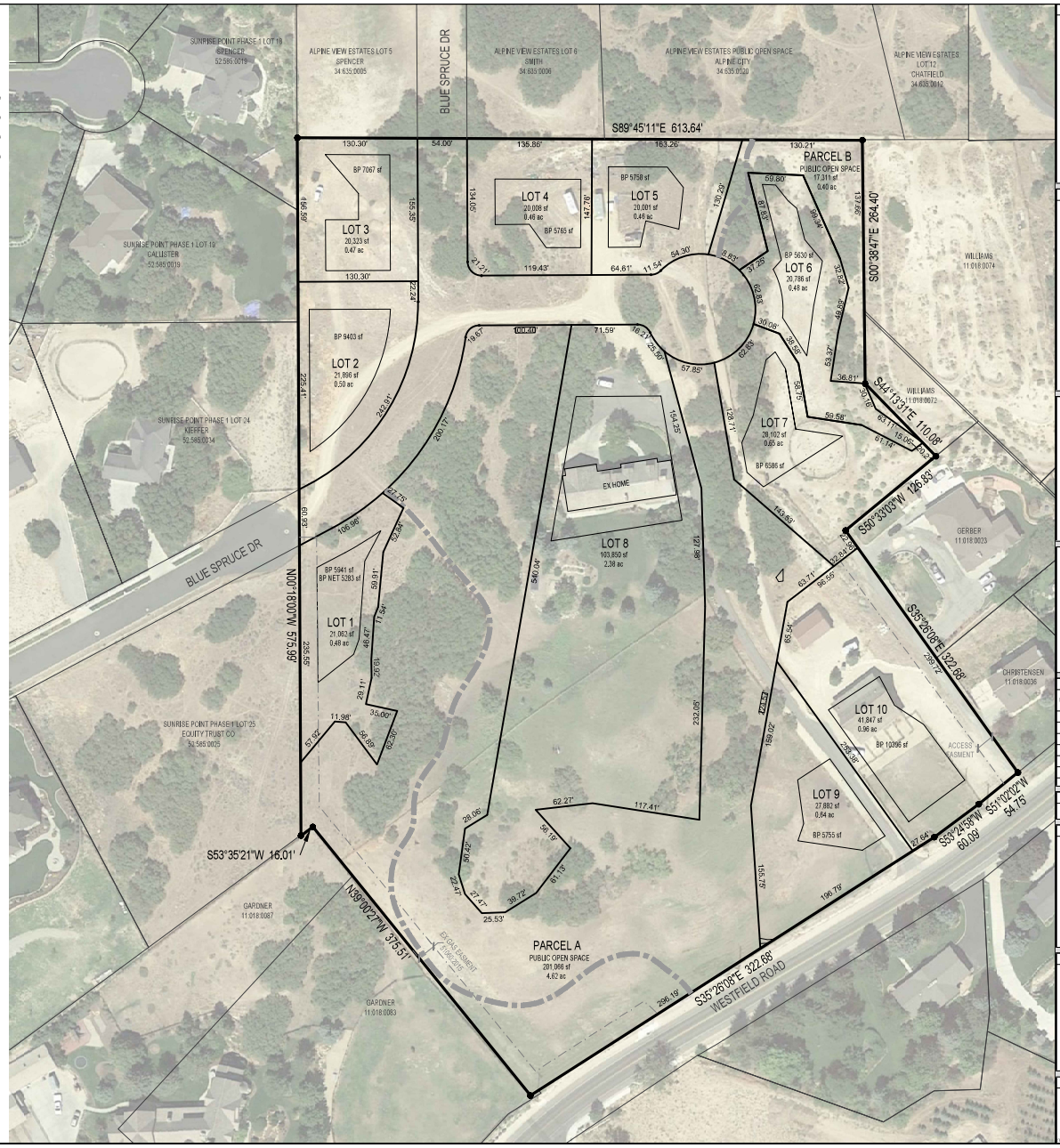

DEVELOPMENT

ANSON SUBDIVISION

487 WESTFIELD RD
ALPINE, UT

CR-40,000 ZONE
PRD PROPOSED

DEVELOPER

SCALE: 1"= 60'

berg CIVIL ENGINEERING
11038 N Highland Blvd Suite 400
Highland Ut, 84003
office (801) 492-1277
cell (801) 616-1677

PROJECT STATUS			SEAL
NO.	DATE	DESCRIPTION	THIS DOCUMENT IS INCOMPLETE AND IS RELEASED TEMPORARILY FOR INTERIM REVIEW ONLY. IT IS NOT INTENDED FOR CONSTRUCTION, BIDDING, OR PERMIT PURPOSES.
1			
2			
3			
4			KENNETH R. BERG P.E.
5			SERIAL NO. 343802
6			DATE:
7			

ACTION	DATE
CONCEPT	10/31/19

PROJECT

ANSON SUBDIVISION

DESCRIPTION

CONCEPT PLAN

SHEET NAME	SHEET NUMBER
PHOTO	*C2*

CR-40,000 Zone

Acreage	Acres	Total Square Feet
Property	13.59	591,987.85
Zone Total Acreage	**13.59**	

Slope Percentages	Percent Acres Within that range	SF within slope range	Acres within slope range	Required Acres per Lot	Allowed Lots for this range
0-9.99%	31.6%	187249.36	4.30	1.00	4.30
10-14.99%	16.1%	95067.06	2.18	1.50	1.45
15-19.99%	11.4%	67769.13	1.56	2.00	0.78
20-24.99%	9.8%	58145.12	1.33	3.00	0.44
25-29.99%	11.6%	68455.37	1.57	4.00	0.39
30%+	19.5%	115301.81	2.65	5.00	0.53
Totals	**100.0%**		**13.59**		
				Base Density	**8**
				Private Open Space (11% Max Bonus), PRD	**9**
				Public Open Space (21% Max Bonus), PRD	**10**

LOT SLOPE CALCULATIONS

LOT #	LOT AREA (sf)	LOT AREA W/ >25% SLOPE	%	BUILDING PAD W/< 20% (sf)	BP >20%	BP NET
1	21,062	2,955	14.03%	5941	658	5283
2	21,896	10	0.05%	9403	0	9403
3	20,323	641	3.15%	7067	0	7067
4	20,008	1,462	7.31%	5765	0	5765
5	20,001	2,609	13.04%	5758	0	5758
6	20,786	3,105	14.94%	5630	0	5630
7	28,102	3,560	12.67%	6586	0	6586
8	103,850	15,220	14.66%	EXISTING HOME		
9	27,882	4,178	14.98%	5755	0	5755
10	41,847	4,512	10.78%	10396	0	10396

VICINITY MAP

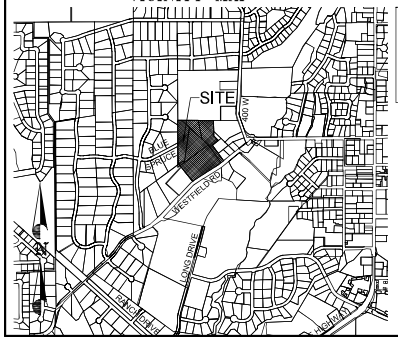

SLOPE LEGEND

Slopes Table

Number	Minimum Slope	Maximum Slope	Area	Color
1	0.00%	10.00%	187249.36	
2	10.00	15.00%	95067.06	
3	15.00%	20.00%	67769.13	
4	20.00%	25.00%	58145.12	
5	25.00%	30.00%	68455.37	
6	30.00%	100.00%	115301.81	

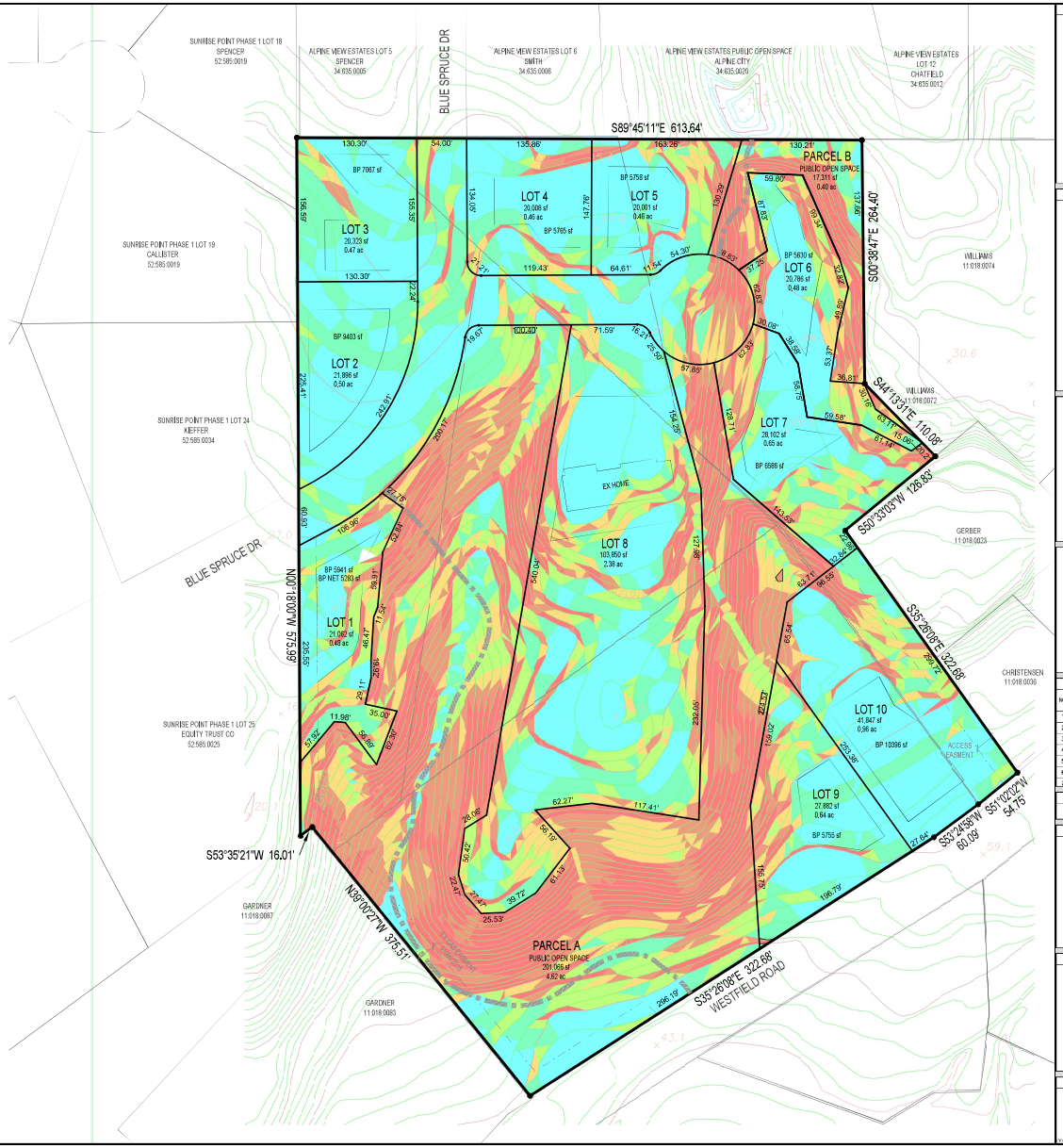

DEVELOPMENT

ANSON SUBDIVISION

487 WESTFIELD RD
ALPINE, UT

CR-40,000 ZONE
PRD PROPOSED

DEVELOPER

SCALE: 1"= 60'

Berg CIVIL ENGINEERING
11038 N Highland Blvd Suite 400
Highland UT, 84003
office (801) 492-1277
cell (801) 616-1677

PROJECT STATUS			SEAL
NO.	DATE	DESCRIPTION	THIS DOCUMENT IS INCOMPLETE AND IS RELEASED TEMPORARILY FOR INTERIM REVIEW ONLY. IT IS NOT INTENDED FOR CONSTRUCTION, BIDDING, OR PERMIT PURPOSES. KENNETH R. BERG P-E-L SERIAL NO. 343662 DATE:
1			
2			
3			
4			
5			
6			
7			

ACTION	DATE
CONCEPT	10/31/19

PROJECT

ANSON SUBDIVISION

DESCRIPTION

CONCEPT PLAN

SHEET NAME	SHEET NUMBER
SLOPE	C3

ALPINE PLANNING COMMISSION AGENDA

SUBJECT: **Public Hearing – Alpine City Construction Standard Specifications and Details**

FOR CONSIDERATION ON: **12 November 2019**

PETITIONER: **Staff**

ACTION REQUESTED BY PETITIONER: **Recommend approval of proposed updates.**

BACKGROUND INFORMATION:

Alpine City needs to adopt a city specific set of construction standards. The Planning Commission shall review the proposed updates, hold a public hearing, and make a recommendation to City Council.

STAFF RECOMMENDATION:
Review the proposed Alpine City Construction Standard Specifications and make a recommendation for City Council to adopt them.

SAMPLE MOTION TO APPROVE:
I motion to recommend adoption of the Alpine City Construction Standard Specifications as proposed.

SAMPLE MOTION TO TABLE:
I motion to recommend that the proposed Alpine City Construction Standard Specifications be tabled for the following:

- ***Insert Finding***

ALPINE CITY
STAFF REPORT
November 7, 2019

To: Alpine City Planning Commission & City Council

From: Engineering

Prepared By: Jed Muhlestein, City Engineer
Engineering & Public Works Department

Re: **Alpine City Construction Standard Specifications and Details**
Request: Recommend Adoption of the Standard Specifications and Details

Alpine City does not currently have a complete city specific set of adopted construction standards. The City has adopted the 2017 version of the American Public Works Association (APWA) Manual of Standard Specifications. The City also has the Development Code, Municipal Code, and Stormwater Design Manual. Engineering has had a set of standard details that have been referenced but never adopted. All these things are good and needed but they don't cover all the details pertaining to construction. Most cities have their own construction standard specifications and details (aka – a "spec book") which clarifies exactly what materials to put in the ground (or above), how, and when. These kinds of details are typically not found in ordinance, municipal codes, or other manuals meant to cover a wide range of topics. This is why the city needs its own spec book; to cover all the "nuts and bolts" of construction.

Staff has taken the spec book of a neighboring city and spent the last three years modifying it to what we feel would be best for Alpine City. Please review the standards and details and provide feedback to Staff.

STAFF RECOMMENDATION
Review the proposed Alpine City Construction Standard Specifications and make a recommendation for City Council to adopt them.

MODEL MOTIONS

SAMPLE MOTION TO RECOMMEND ADOPTION
I motion to recommend adoption of the Alpine City Construction Standard Specifications as proposed.

SAMPLE MOTION TO TABLE
INSERT MOTION

Jed Muhlestein

Alpine City Engineer

CONSTRUCTION STANDARD SPECIFICATIONS

Adopted _____

ALPINE CITY CONSTRUCTION STANDARDS

Section 100. General Provisions.
Section 200. Improvement and Design Requirements.
Section 250. Inspection and Testing.
Section 300. Contractor Requirements.
Section 350. Earthwork and Trenches.
Section 400. Drinking Water.
Section 450. Pressurized Irrigation.
Section 500. Sanitary Sewer
Section 550. Storm, Land and Groundwater Drains.
Section 600. Streets and Pavements.
Section 650. Portland Cement Concrete and Masonry Work.
Section 700. Reserved.
Section 750. Reserved.
Section 850. Surface Irrigation Systems.
Section 900. Landscaping.
Section 950. Irrigation Sprinkler Systems.
Section 1000. Standard Details

Adopted _____

Section 100. General Provisions.

SECTION INDEX

100.010. Improvement Requirements.
- A. General.
- B. Improvements Made Before Recording.
- C. Variations, Substitutions, Exceptions and Changes.
- D. Protection of Existing Improvements.
- E. Maintaining Existing Road Surfaces.
- F. New Materials.
- G. City Furnished Products.
- H. Product Delivery and Handling.
- I. Product Storage and Protection.
- J. Building Permits.
- K. Other Specifications and Standards.

100.020. Definitions.

100.010. Improvement Requirements.

A. General. This policy defines the general requirements for improvements to be built by the Developer, sub-divider, owner, or Contractor for all types of construction, (to include residential, commercial, industrial, institutional, governmental and professional office). All improvements which are in areas that are or will become public rights-of-way and/or easements, or that will be under the responsibility of a homeowners association shall meet the requirements of these specifications.

The improvements shall include all street improvements in front of all lots and along all dedicated streets to a connection with existing improvements of the same kind and to the boundaries of the development. Layout must provide for future extension to adjacent development and to be compatible with the contour of the ground for proper drainage. All drinking water, sanitary sewer, pressurized irrigation, electric, communication, storm, land or groundwater drains and any other buried utilities or conduits shall be installed to the boundary lines of the Subdivision or development.

B. Improvements Made Before Recording. No improvements shall be commenced until a final plat is approved and inspection fees paid.

C. Variations, Substitutions, Exceptions and Changes. Any variation, substitution or exception from the standards in this policy must be authorized in writing by the City Engineer or his/her designee. Product options and substitutions must meet the requirements of APWA 01 25 00 (Product Options and Substitutions). Any item of construction not covered in these standards must have plans and specifications approved by the City Engineer or his/her designee. Requests for changes to the Construction Standards shall be made in writing to the City Engineer. These requests will be reviewed during revision process conducted in conjunction with the APWA revisions.

D. Protection of Existing Improvements. The Contractor shall be responsible for the protection of any existing improvements on public or private property at the start of work or placed there during the progress of the work. Existing improvements shall include but are not limited to permanent surfacing, curbs, ditches, driveways, culverts, fences, walls and landscaping. Any surface improvements damaged as a result of construction shall be restored or replaced to an equal or better condition than before. This shall be accomplished in a timely manner.

E. Maintaining Existing Road Surfaces. The Contractor shall be responsible for maintaining existing road surfaces suitable for travel by the public. The Contractor shall be responsible for all dust and mud control and all claims and damages resulting from failure to maintain the construction area.

F. New Materials. Only new materials may be used during construction unless otherwise authorized by the City Engineer or his/her designee. In such a case where used materials are proposed, only materials of similar use may be installed in a new system with the same use. Example: Only previously used storm drain pipe can be evaluated for use in a new storm drain system or only previously used culinary main line may be evaluated for use in a new culinary system. If approved, the used materials must meet all applicable standards, thoroughly cleaned, and be restored to their original condition prior to installation.

G. City Furnished Products. If the City furnishes any products the Contractor shall conform to requirements and specifications of APWA 01 64 00 (Owner-furnished Products).

H. Product Delivery and Handling. The Contractor shall conform to requirements and specifications of APWA 01 65 00 (Product Delivery and Handling).

I. Product Storage and Protection. The Contractor shall conform to requirements and specifications of APWA 01 66 00 (Product Storage and Protection).

J. Building Permits. The City may issue a building permit upon application, in compliance with all laws, ordinances, rules, and regulations. No building permit will be issued until all the improvements essential to meet the building code and fire code are installed, accepted, and in service and all building permit and impact fees are paid.

When asphalt pavement plants are closed for the winter, building permits may be issued before paving if there is eight inches of compacted road base in all areas to be paved.

The City Engineer or his/her designee is hereby designated as the responsible official to accept the improvements.

K. Other Specifications and Standards. City standards and ordinances shall supersede all other Standards whenever they conflict. Alpine City hereby adopts 2017 APWA (American Public Works Association). If not covered in these specifications and details, 2017 APWA specifications shall be used.

100.020. Definitions.

A. AASHTO. The American Association of State Highway and Transportation Officials, is a standards setting body which publishes specifications, test protocols and guidelines which are used in highway design and construction throughout the United States.

B. APWA. The Utah Section, American Public Works Association Manual of Standard Specifications, latest edition with all approved supplements. These standard specifications can be obtained at http://utah.apwa.net/. When sections of the APWA manual are referred to in these standards, the Contractor shall also adhere to the requirements and specifications of all related sections referred to by the section of the APWA manual.

C. AWWA. The American Water Works Association Standards, latest edition.

D. City. The City of Alpine, Utah.

E. City Engineer. The person appointed by the City to be the City Engineer.

F. City Planner. The person appointed by the City to be the City Planner.

G. Civil Engineer. A person-licensed with the State of Utah to practice as a professional engineer.

H. County. Utah County, Utah.

I. Construction Plans. Construction plans include drawings showing all required improvements for a development showing their location, size, grade, and elevations.

J. Customer. A person or company receiving service from any City utilities

K. Contractor. A person or company hired by the City or a Developer to perform construction in or for the City, having appropriate state licenses to perform said work.

L. Council or City Council. The governing body of the City.

M. Cul-de-sac. A permanent dead-end street.

N. Developer. Person, persons, partnership or corporation developing residential, commercial or industrial property.

O. Development Code. The Alpine City Development Code as currently adopted by the City Council.

P. Final Plat. An original recordable plat drawn on mylar in a form approved by the City and County, showing all lots, streets, utility easements, etc.

Q. Flood Plain. That area designated on the most recent Flood Insurance Rate Map for the City of Alpine, prepared by the Federal Emergency Management Agency, as a flood plain as amended.

R. General Plan. The general plan document as approved by the City Council.

S. Improved Lot. A lot which has all the improvements required in the Alpine City Development Code.

T. Improvements. Includes roads, streets, curb, gutters, sidewalks, grading, landscaping, water and sanitary sewer systems, irrigation systems, drainage systems, power and communication systems, fences, public facilities, trees or other requirements by this Section or by the City.

U. Land Surveyor. A person licensed with the State of Utah to practice as a licensed land surveyor.

V. Lot. A parcel or tract of land within a subdivision which is or may be occupied by a building or structure and the accessory buildings, structures or uses customarily incident thereto, including such open spaces as are arranged and designed to be used in connection with the building according to the zone within which the lot is located.

W. LID. Low Impact Development is an approach to land development that works with nature to manage storm water as close to its source as possible. LID employs principles such as preserving and creating natural landscape features, minimizing effective imperviousness to create functional and appealing site drainage that treats storm water as a resource rather than a waste product.

X. MUTCD. The Manual on Uniform Traffic Control Devices defines the standards used by road managers nationwide to install and maintain traffic control devices on all public streets, highways, bikeways, and private roads open to public traffic.

Y. NEC. The National Electrical Code is a United States standard for the safe installation of electrical wiring and equipment.

Z. NESC. The National Electrical Safety Code establishes rules which govern: a) methods of grounding; b) installation and maintenance of electric-supply stations and equipment, of overhead supply and communication lines, and of underground and electric-supply and communications lines; and c) operation of electric-supply and communication lines and equipment.

AA. Offsite Facilities. Facilities outside of the boundaries of the subdivision or development site which are designated and located to serve the needs of the subdivision or development or adjacent property, usually lying between a development and existing facilities.

BB. Onsite Facilities. Facilities installed within or on the perimeter of the subdivision or development site.

CC. OSHA. The Occupational Safety and Health Administration is the main federal agency charged with the enforcement of safety and health legislation.

DD. Parcel of Land. A contiguous area of land in the possession or ownership of one person with one tax identification number.

EE. Planning Commission. The Planning Commission of Alpine City.

FF. Preliminary Plat. A map or plat of a proposed subdivision or development with accompanying supplementary documents.

GG. Public Utility Easements. The easements required to place public utilities across any privately owned property.

HH. ROW. A public Right of Way is a strip of land that is granted, through an easement or other mechanism, for transportation purposes, such as for a trail, driveway, rail line or highway. A right-of-way is reserved for the purposes of maintenance or expansion of existing services with the right-of-way.

II. Site Plan. A plan for a commercial, industrial, institutional, governmental or planned residential development in the City.

JJ. Streets. A thoroughfare which has been dedicated and accepted by the City Council, which the City has acquired by prescriptive right or which the City owns, or is offered for dedication on an approved recorded final plat. For further explanation see the streets section.

KK. Subdivision. Any parcel of land that is divided, re-subdivided or proposed to be divided into two or more lots, parcels, sites, units, plots, or other division of land for the purpose, whether immediate or future, for offer, sale, lease, or development either on the installment plan or upon any and all other plans, terms, and conditions. A subdivision includes (1) the division or development of land whether by deed, metes and bounds description, devise and testacia, lease, map, plat, or other recorded instrument; and (2) divisions of land for all land for all residential and nonresidential uses, including land used or to be used for commercial, agricultural, and industrial purposes.

LL. Utilities. Includes drinking water lines; irrigation lines; sanitary sewer; storm, land and groundwater drains; gas lines; electric power lines; cable television and telephone lines; underground conduits; and junction boxes and all appurtenances to the above.

Section 200. Improvement and Design Requirements.

SECTION INDEX

200.010. General.
- A. Easement.
- B. Traffic Control.
- C. Survey.
- D. Temporary Controls.
- E. Landfill, Construction Debris, or Garbage.

200.015. Specialized Engineering.
- A. General
- B. Geotechnical Engineering.

200.020. Construction Plans.
- A. General.
- B. Plan Sheets.
- C. Electric and Communication Plans.
- D. Street, Parking Lot and Driveway Plans.
- E. Sanitary Sewer, Storm, Land and Groundwater Drain Plans.
- F. Drinking Water and Pressurized Irrigation Plans.
- G. Landscaping Plans.
- H. Irrigation Canal and Pipe Plans.

200.030. Street Improvements.
- A. General.
- B. Access
- C. Cul-de-sacs.
- D. Curbs, Gutters, and Sidewalks.
- E. Partial-Streets Widths.
- F. Driveway and Intersection Location.
- G. Parking.
- H. Reverse Frontage Lots.
- I. Temporary Turn-Arounds.
- J. Allowable Grades.
- K. Stamped Concrete or Pavers.
- L. Precast Concrete or Block Walls.
- M. Pedestrian Ramps.
- N. Horizontal and Vertical Curve.

200.040. Utility Improvements.
- A. General.
- B. Communication.
- C. Electric.
- D. Pressurized Irrigation.
- E. Sanitary Sewer.
- F. Storm Drain.
- G. Drinking Water.

200.010. General.

A. Easements. Developer shall provide easements for all utility extensions through private property. Developer shall also provide a 10 foot public utility easement along public right-of-ways or streets, along all exterior property boundaries of the development, and 5 foot public utility easements along all interior property lines of the development. If setbacks are less than 10 feet then public utility easements shall be the extent of the setback.

B. Traffic Control. A traffic control plan shall be submitted to the City prior to construction in or along public streets. All traffic control shall comply with APWA 01 55 26 (Traffic Control) and the MUTCD.

C. Survey. The alignment of the side property lines for each lot in a subdivision shall be marked in the top back of curb with a lot line witness marker that meets the requirements and specifications of APWA 31 05 10 (Boundary Markers and Survey Monuments). Developer shall provide survey bench marks and monuments as required by the City Engineer or his/her designee.

All property corners shall be marked with a rebar corner marker that meets the requirements and specifications of APWA 31 05 10 (Boundary Markers and Survey Monuments). Corners must be marked before acceptance of a subdivision's improvements by the City. The rebar must be offset 2 to 4 inches by a steel tee post four feet out of the ground on the property line alignment.

D. Temporary Controls. Temporary controls such as noise, dust, mud, surface water, ground water, pollution and erosion controls shall be made. Controls shall meet the requirements and specifications of APWA 01 57 00 (Temporary Controls). The pumping of groundwater across sidewalks, into gutters or into the sanitary sewer system is prohibited.

E. Landfill, Construction Debris or Garbage. No buildings, paved parking lots, paved roads, curb, gutter, or sidewalks are allowed to be located over landfills, construction debris, or garbage.

200.015. Specialized Engineering.

A. General. Any specialized engineering beyond the expertise of city staff such as, but not limited to, geotechnical, traffic, environmental, hillside, floodplain, bank stabilization and erosion control will require the review of qualified consultants. All review costs shall be paid by the property owner/developer.

B. Geotechnical Engineering. All Major subdivisions, as outlined in the Development Code, shall be required to submit a site specific geotechnical report. The geotechnical report shall include sufficient subsurface exploration, laboratory testing and geotechnical engineering analysis to render design level geotechnical recommendations and opinions regarding slope stability and required mitigation to protect planned or future development above and below the slope(s) from earth deformations and other adverse soil or geologic conditions.

All work completed in connection with the site specific geotechnical report shall be performed by an experienced geotechnical engineering firm and under the direct supervision and direction of a professional geotechnical engineer properly licensed in the state of Utah.

The scope of work described below is considered the minimum requirement for the geotechnical investigation. The geotechnical firm (Consultant) shall use their experience and engineering judgment in conjunction with the minimum requirements outlined below to develop an appropriate site-specific geotechnical scope of work and report.

1. Field Explorations. Prior to commencing field explorations the geotechnical engineer shall review available geologic maps, aerial photographs and other pertinent literature to develop an understanding of the site and its geologic setting.

   Locate utilities within areas of explorations by notifying the appropriate local one-call state utility locate service. Independent private utility locates may be required for utilities not identified by the local one-call service. Complete subsurface explorations, as many as needed to obtain a representative sample of all soil conditions for the entire site, but specifically shall be obtained for proposed roadway locations and residential building.

   Boring (s) shall be located within close proximity to slope crests so as to render a representative soil profile of the slope for analysis. The boring(s) shall extend to a minimum depth of 15 feet

below the tow of the slope. For example, if a 30-foot tall slope is being evaluated the boring shall extend at least 45 feet below the top of the slope. Borings shall extend through existing fill materials so that at least one sample is collected in native soil. Adjust boring depths for anticipated site development cuts and fills and for known soil conditions.

The geotechnical shall consider past property use and location. Additional soil borings shall be planned for sites located in areas that are known or suspected to have had previous slope deformations or seeps, springs or other adverse features. Special attentions shall be given to identifying, to the extent practical, the presence and extent of existing fill.

Collect a minimum of four (4) soil samples in the upper ten (10) feet of the profile and at intervals of five (5) feet thereafter. Adjust sampling intervals to include major changes in soil layering. Collect a sufficient number of undisturbed samples in fine-grained soils to properly assess strength and consolidation properties. Perform split barrel sampling in granular soils. Field blow counts should be corrected for energy and depth and presented as Standard Penetration Test (SPT) blow counts on the soil boring logs.

Field classify encountered soil in accordance with the American Standard for Testing and Materials (ASTM) and Unified Classification System (USCS).

Borings encountering bedrock shall be extended a minimum of 5 feet into the bedrock. Rock coring equipment shall be used where practical to aid in assessing rock properties. Where cores are collected, Rock Quality Designator (RQD) values should be presented on the boring logs.

2. Laboratory Testing. Samples collected in the field shall be properly packaged to avoid disturbance or freezing and transported to an accredited geotechnical and materials testing laboratory for further observation and testing. Laboratory testing shall be performed under the direction of a Utah licensed professional geotechnical engineer and in accordance with appropriate ASTM standards. At a minimum laboratory testing shall include the following:

    a. Sieve analysis – determine grain size distribution and percent fines (minus 200 sieve)
    b. Atterberg tests – classification, indexing, shrinkage and expansiveness
    c. In-place density
    d. Natural moisture content
    e. Shear strength – Direct Shear and/or Triaxial Shear

    Additional laboratory testing may be required to address site conditions and provide necessary engineering properties for analysis. The geotechnical engineer shall use his professional judgment and local experience to determine an appropriate scope for laboratory testing.

    Laboratory test results shall be presented in the Geotechnical Report, on individual summary sheets in the report appendix or on the boring logs.

3. Geotechnical Report Requirements. The results of the field and laboratory programs shall be evaluated by a Utah registered professional geotechnical engineer. Based on the results of their evaluation, an engineering report shall be prepared that details the results of the testing performed, provides logs of the borings and a diagram of the site/boring layout and provides geotechnical recommendations and information regarding following:

    a. General suitability of the site for the planned development
    b. Recommended precautions and limitations
    c. Subsurface exploration procedures
    d. Soil and rock conditions encountered
    e. Groundwater depth during and after drilling
    f. Geologic setting
    g. Geologic hazards (ie – fault, slide, rock fall, etc.)
    h. Slope stability including provisions, recommendations and designs to mitigate the effects of unstable slopes and other geologic hazards that may adversely impact planned developments above and below the slope(s)
    i. Special design and construction provisions for footings or foundations near steep slopes, including type and depth of foundation system and set back distance from slopes
    j. Surface water runoff control and drainage

k. Subsurface drainage
l. Site grading and earthwork requirements, as appropriate

Detailed individual boring logs and graphical cross sections summarizing soil / rock profiles and slope stability analysis and results shall be included in the geotechnical report. The logs shall contain sufficient detail to render a clear description of the soil stratigraphy, soil descriptions and classifications, SPT blow counts, sample locations and depths, ground water depths and appropriate laboratory test results. Individual boring logs shall include a description of the boring location, exploration equipment used, relative or actual elevation, date of exploration and other pertinent information relative to the field exploration. The cross sections shall contain sufficient detail to render a clear description of the slope stability analysis results and any mitigation measures required. The cross sections shall contain soil profile data and a summary of engineering properties and parameters used in the analysis for each significant soil / rock layer.

The final geotechnical report shall bear the geotechnical engineer's stamp and seal. One (1) electronically submitted PDF copy of the report shall be delivered to the City of Alpine within sufficient time for review and comment. The City will have the report reviewed by its own geotechnical engineer. The cost of that review will be borne by the applicant.

200.020. Construction Plans.

A. General. The following instructions are for the purpose of standardizing the preparation of construction plans to obtain uniformity in appearance, clarity, size, and style. Plans and designs shall meet the standards defined in the specifications and drawings hereinafter outlined. All drawings and/or prints shall be clear and legible and conform to good engineering and drafting room practice.

Include the following in construction plans for all developments:

1. A copy of the proposed final plat or site plan;
2. A plan view of the entire project showing all utilities, roads, and appurtenances;
3. Plan and profiles of all storm, land and groundwater drains, sanitary sewer, curb, gutter, and irrigation;
4. Detail drawings of street cross sections according to the standard drawings and other detail drawings only for items not found in the City standard drawings. Detail drawings shall be to scale and completely dimensioned and described. All items shall be designed in accordance with minimum requirements established by the City Construction Standards;
5. Complete plans for all off-site work to be done in conjunction with the project;
6. A stamp and signature of a Civil Engineer licensed in the state of Utah on each plan sheet, detail drawing, and design sheet;
7. Engineer's take off quantities and cost estimate for all construction work related to the project;

B. Plan Sheets. Include the following on each plan sheet:

1. North Arrow;
2. A standard engineering scale between 1 inch equals 10 feet and 60 feet. A scale of 1 inch equals 100 feet may be used on the plan view of the entire project if necessary to fit project on one sheet;
3. Title block along right side of sheet with title of drawing in lower right corner. Include in title block:
    a. Name of subdivision and plat or site plan;
    b. Name of city;
    c. Specific type of drawing (construction drawings, plan view, plan and profiles, off-site construction, detail drawings);
    d. Name of engineer, surveyor, or firm preparing drawings;
    e. Drawing number of total number of drawings;
4. Also include the following with profile drawings:
    a. Vertical scale of 1 inch equals 1, 2, 3, 4, 5, or 6 feet;
    b. Reference to the vertical datum. The 1929 or 1988 North American Vertical Datum (NAVD29 or NAVD88) shall be used for all elevation data;
    c. Benchmark location and elevation for checking construction;
    d. Stationing aligned from plan view with the profile view;
    e. Existing ground, ditch, and utility lines;
    f. A sheet index on each sheet showing profiled area in relation to the overall project.

C. Electric and Communication Plans. Construction plans must include the location of all existing poles, transformers, secondary junction boxes, gas lines, sectionalizers, overhead electrical wire and overhead

communication cable. Developers will be required to work separately with owners of these companies to obtain the necessary approvals from them.

D. Street, Parking Lot, and Driveway Plans. Include the following for curb, gutter, storm, land and groundwater drains, drainage structures, sidewalks, and street surfacing plans:
   1. Plan and profile for top back of curb for each side of the street. Label profile line as top back of curb for both sides of street if it is the same;
   2. Stationing and top back of curb elevations with curve data for curb returns;
   3. Flow direction and type of cross drainage structures at intersections with adequate flow line elevations;
   4. Type of curb and gutter if other than the standard twenty-four inch curb and gutter in the standard drawings;
   5. Location and width of driveways;
   6. Street cross sections with all proposed and existing utilities and base sections as per soils report and Construction and Development Standards;

E. Sanitary Sewer, Storm, Land and Groundwater Drain Plans. Include the following for sanitary sewer, storm, land and groundwater drain plans:
   1. Plan and profile of all new and existing mains and manholes;
   2. Box and manhole size, location, and elevations of flow lines and rim;
   3. Location, size, grade, and type of pipe of new and existing mains;
   4. Location of each lateral with distance stubbed back into property clearly drawn and dimensioned;
   5. Storm water calculations per the Alpine City Storm Water Drainage Design Manual and Appendicies;
   6. Storm inlet boxes shall be located on street corners and or property lines.

F. Drinking Water and Pressurized Irrigation Plans. Include the following for drinking water and pressurized irrigation plans:
   1. Location, size, and type of pipe of new and existing water mains;
   2. Location of valves, fittings, hydrants, boxes, meters, and appurtenances;
   3. Minimum cover;
   4. Location of each lateral with distance stubbed back into property clearly drawn and dimensioned;
   5. Looping of the drinking waterline will be required at the discretion of the City Engineer or his/her designee to provide adequate fire flows and redundancy.

G. Landscaping Plans. For landscaping that will be maintained by the City, developments with landscaping restrictions (Three Falls, Summit Pointe, etc.), or a homeowner's association submit one copy of the landscaping plans including all irrigation system layouts, details, legends, and drawings. These project plans shall meet the requirements of the Section 900. Landscaping and Section 950. Irrigation Sprinkler Systems, as well as the specific requirements of the development in which they are located.

H. Irrigation Canal and Pipe Plans. Plans that affect canals or irrigation pipes must be stamped approved by those responsible for their maintenance before they will be approved by the City.

200.030. Street Improvements.

A. General. The Developer shall construct all streets and appurtenances required for the development as specified by the City Council in accordance with the City Construction and Development Standards and/or other codes adopted by the City. The design and all street work shall be done as directed and under the supervision of the City Engineer or his/her designee.

B. Access. Access requirements shall be in accordance with the Development Code.

C. Cul-de-sacs. The maximum length of a cul-de-sac is 450 feet measured from the nearest right-of-way line of the adjoining street to the center of the cul-de-sac. The minimum radius of the cul-de-sac is 60 feet at the property line.

D. Curbs, Gutters and Sidewalks. Curbs, gutters, and sidewalks shall be built along all public streets according to the standard drawings. All curbs, gutters, and sidewalks shall connect to existing curbs, gutters, and sidewalks within a reasonable area as determined by the City Engineer or his/her designee.

E. Partial-Streets Widths. Per Alpine City Development Code

F. Driveway and Intersection Location. Driveways and street intersection locations shall be designed according to Alpine City Transportation Master Plan. No driveway shall be constructed within 40 feet from an adjoining street. The distance is measured from the adjoining street's Top Back Curb (TBC) to the edge of driveway for access.

Curb cuts shall only be allowed for driveways. Driveways shall be a minimum of 3 feet from any above grade utility box. All accesses and streets onto arterials must be approved by the City Engineer or his/her designee.

G. Parking. Per Alpine City Development Code.

H. Reverse or Double Frontage Lots. Per Alpine City Development Code

I. Temporary Turn-Arounds. Per Alpine City Development Code.

J. Allowable Grades. Per Alpine City Development Code

K. Stamped Concrete or Pavers. Alpine City does not allow colored/stamped concrete or pavers on city owned concrete flatwork unless recommended by the Planning Commission and approved by the City Council.

L. Precast Concrete or Block Walls. The design of all walls greater than four feet of exposed height must be approved through the Building Department. Design must be stamped and signed by a licensed professional civil engineer registered in the state of Utah.

M. Pedestrian Ramps. Pedestrian ramps shall be placed at all corners of intersections and at all other locations of regular pedestrian traffic across roads as determined by the City Engineer or his/her designee. All ramps shall conform to the requirements of the Americans with Disabilities Act and City standards.

N. Horizontal and Vertical Curve. Per Alpine City Development Code

200.040. Utility Improvements.

A. General. It shall be the responsibility of the Developer to connect to existing utilities or improvements wherever they are located and extend those improvements to and through the development. Workmanship and details of construction shall be in accordance with the City Construction Standards and/or other codes adopted by the City. All work shall be done under the supervision of the City Engineer or his/her designee.

B. Communication. Communication lines shall be underground except when the City Engineer or his/her designee feels that such underground lines are not in the best interest of the City.

C. Electric. Electrical lines shall be underground except when the City Engineer or his/her designee feels that such underground lines are not in the best interest of the City. Lines shall be located opposite of water and pressurized irrigation lines.

D. Pressurized Irrigation. The Developer shall connect the development with the city pressurized irrigation system with all appurtenances and shall make such pressurized irrigation available to each lot or unit within the development. Adequacy of supply and sizes of pressurized irrigation mains shall be established by the City Engineer or his/her designee. Meter boxes shall be located per Alpine City Standard Details.

E. Sanitary Sewer. The Developer shall provide each lot with a sanitary sewer system in accordance with the ordinances of the City. All measures should be taken to utilize a gravity sewer system before the City will consider a pumped system. All said work shall be done as directed and under the supervision of the City Engineer or his/her designee.

F. Storm Drain. The Developer shall provide on-site storm drainage facilities according to the storm water Drainage Design manual and in accordance with the ordinances of the City. Storm drainage systems shall incorporate Low Impact Development (LID) systems. The maximum allowable storm water discharge from any commercial and industrial development will be limited to 0.07 cfs/acre of development. Individual lots shall retain the 90^{Th} Percentile Storm.

G. Drinking Water. The Developer shall connect the development with the city drinking water system with all appurtenances and shall make such drinking water is available to each lot or unit within the development. Adequacy of supply and sizes of drinking water mains shall be established by the City Engineer or his/her

designee. Pipes shall be located opposite from electrical lines. Looping of the drinking waterline will be required at the discretion of the City Engineer or his/her designee to provide adequate fire flows and redundancy. Meter locations shall be per Alpine City Standard Details.

Section 250. Inspection and Testing.

SECTION INDEX

250.010. General.
A. Quality Assurance.
B. Submittals.
C. Preconstruction Meeting.
D. Inspection and Testing Notification.
E. Testing and Sampling.
F. Testing Agency.
G. Work without Required Inspection and Testing.
H. Inspection and Testing Fees.
I. Sub-standard Work and Pay Factors.
J. Weekly Progress Meetings.
K. Road Construction.
L. As-Built Survey.
M. Acceptance of Improvements.

250.020. Earthwork.
A. Compaction and Moisture Content Tests.
B. Red-head Inspection.
C. Proof Roll Inspection.
D. Thickness Test.

250.030. Landscaping and Irrigation Sprinkler Systems.
A. Plant Material Inspection.
B. Sprinkler System Assembly Inspection.
C. Fall Sprinkler Winterizing Test
D. Spring Sprinkler Energizing Test.
E. Final Acceptance Inspection.

250.040. Portland Cement Concrete Work.
A. General.
B. Slump, Temperature, and Air Entrainment Test.
C. Compression Test.
D. Forms and String Line Inspection.
E. Gutter Drainage Inspection.
F. Thickness Test.
G. Curing Inspection.

250.050. Pressurized Irrigation.
A. General.
B. Main Line Inspection.
C. Pressurized Irrigation Service Inspection.
D. Pressure Test.
E. Leakage Test.

250.060. Sanitary Sewer.
A. General.
B. Main Line Inspection.
C. Service Inspection.
D. Air Pressure Test.
E. Video Inspection.
F. Deflection Test.

250.070. Storm, Land and Groundwater Drains.
A. General.
B. Main Line Inspection.
C. Air Pressure Test.
D. Video Inspection.
E. Deflection Test.

250.080. Streets.

A. Asphalt Pavement Material Tests.
B. Compaction Tests.
C. Grading Inspection.
D. Thickness Test.
E. Profile Tolerance Inspection.
F. Asphalt Concrete Temperature Test.
G. Asphalt Paving Limitations.

250.090. Drinking Water.

A. General.
B. Main Line Inspection.
C. Drinking Water Service Inspection.
D. High Chlorine Test.
E. Pressure Test.
F. Leakage Test.
G. Bacteria Test.

250.010. General.

A. Quality Assurance. The following work shall be subject to the inspection and testing requirements of this Section:

1. Work on existing or proposed City property;
2. Work on property that will be owned by a property owners association;
3. Work on existing or proposed streets, easements, or right-of-ways;
4. Work on existing or proposed City utilities.

The Contractor must ensure that all inspection and testing required by these standards is preformed and accepted by the City Engineer or his/her designee. The Contractor must also ensure that any additional inspection and testing required by the City or a testing company is performed and accepted by the City. In projects other than those bid out by the City, the Developer is ultimately responsible for the work of the Contractor.

B. Submittals. Contractor shall turn in submittals for all testing not performed by the City.

1. *Field Test Report.* Contractor must submit original field test report immediately to City whenever possible. Reports may not be submitted later than the end of the current day.
2. *Laboratory Test Report*. Submit original report to the City within 48 hours after test results are determined.

Material and Equipment Specifications. One copy of the manufacturer's specifications and manuals for equipment and materials used must be submitted to the City 7 days before the pre-construction meeting.

C. Preconstruction Meeting. The Contractor must schedule a preconstruction meeting with the City's engineering department before any work on a new development or City project may begin.

The Contractor, Developer, project engineer, and all sub-contractors must be present at the preconstruction meeting. Any sub-contractor not attending the preconstruction meeting must schedule an additional preconstruction meeting with the City before beginning work. Work must begin within 4 weeks of the preconstruction meeting or a new preconstruction meeting must be scheduled by the Contractor at the discretion of the City Engineer.

D. Inspection and Testing Notification. The City may contract with a private company to conduct any inspections or testing specified to be performed by the City. All inspections and tests must be scheduled with the City or company contracted by the City a minimum of 1 full business day before needed. Requests for inspection on work requiring continuous inspection shall be made 3 full business days prior to commencing the work.

E. Testing and Sampling. The City Engineer or City Inspector may require that sampling be performed in their presence, in which case the Developer or Contractor shall be notified of this requirement in writing at the time the building permit is issued, or at the preconstruction meeting, or when construction drawings are released by the City for construction, as applicable.

Each sample or test shall be accompanied by the following written data, which shall be reported to the City with test results:

1. Name of Project.
2. Name of Developer/Contractor.
3. Project Street Address.
4. Appropriate Test Name.
5. Date of Sampling.
6. Sample Number (if more than one sample per day).
7. Name of technician who performed the testing.
8. Location of sample.

F. Testing Agency. All materials testing, whether in a laboratory or in the field, shall be conducted by a testing agency approved by the City Engineer or his/her designee.

G. Work without Required Inspection and Testing. Any work performed without required inspection or testing will give the City the option to call the bond covering that portion of the improvements in violation, or, require the removal and replacement of the un-inspected work. The City Engineer may also accept the work at a reduced price if the lowest pay factor is applied.

H. Inspection and Testing Fees. Inspection fees and/or connection fees shall be paid and permits required shall be obtained prior to commencement of construction.

I. Sub-standard Work and Pay Factors. If any inspection or test indicates that work does not meet City standards the City Engineer may require that the work be redone. If the work has a pay factor option in the standards, the City Engineer may accept the work at a reduced price upon condition that the pay factors outlined in the City standards apply. Payment reduction amounts shall either be assessed to the developer as a fee based upon bond estimates for the work, or be applied against payments to Contractors for City contracts. When any work is done to a lower standard than allowed for in the pay factor tables the work shall be redone until it meets City standards.

J. Weekly Progress Meetings. At the pre-construction meeting it will be determined if weekly construction meetings are required. The City Engineer or his/her designee, City inspectors, the Contractor, and sub-contractors shall be in attendance.

K. Road Construction. Road construction may not commence until all underground utilities (both City and privately owned) are installed and pass all the inspections and tests required by these standards.

L. As-Built Survey. The Contractor shall notify the City to survey all underground utilities either installed or uncovered in the course of construction. Contractor shall give the City 24 hour's notice to survey utilities.

M. Acceptance of Improvements. Inspections made by the City or a company hired by the City to determine compliance with the specifications do not imply final acceptance of the work. The City requires the completion of all facilities before any are accepted for maintenance. The following inspections must be scheduled and passed before final acceptance of any improvements:

1. *End of Construction Inspection.* The Contractor must schedule with the City an end of construction inspection once all the improvements in a development or project are completed according to the Construction and Development Standards.
2. *Final Acceptance Inspection.* One year after the Contractor or Developer passes the end of construction inspection, he or she must schedule a final acceptance inspection.

If the Contractor or Developer does not pass one of these inspections a punch list of work items necessary to pass the inspection will be given to the Contractor or Developer within 2 business days of the inspection. The Contractor or Developer must reschedule inspections with the City until the project or development passes the inspection.

All improvements shall be free from defects, damage, or debris at the time of these inspections. The Contractor or Developer shall not be responsible for debris or damage not caused as a result of his or her work or quality of work.

Any faulty or defective work shall be corrected by the Contractor within 30 days of the failed inspection or according to the contract the City has with the Contractor.

If the Contractor or Developer fails to do so, the City Engineer or his/her designee shall have such repairs made, and the cost of such repairs shall be paid by the Developer together with 25% in addition thereto for stipulated damages for such failure on the part of the Developer to make the repairs.

250.020. Earthwork.

A. Compaction and Moisture Content Tests. The Contractor will test all sub-grade and fill material for compaction and moisture content and will provide these tests to the city within 48 hours of testing. Test locations shall be determined by the City.

1. *Trenches.* Tests will generally be taken 1 per 200 lineal foot of trench per 8 inch lift.
2. *Streets.* Tests will generally be taken 3 per 200 lineal foot of street per 8 inch lift.
3. *Other Cuts and Fills.* Tests will generally be taken 1 per 2,000 square feet of compacted area.

B. Red-head Inspection. The project engineer must provide red-heads for all grade work when brought to within 3 inches of finish grade. The City must inspect and accept finished grading to the engineered red-heads.

C. Proof Roll Inspection. Prior to placing fill material for roadbed backfills, proof roll sub-grade using gross weight of 18,000 pounds per tandem axle, with a tire pressure at least 90 psi, unless otherwise specified by

the soils report. Contractor shall proof roll under the supervision of the City according to the following conditions:

1. *Passes.* All proof roll passes will traverse the sub-grade parallel to the roadbed centerline. All subsequent passes will be offset half the vehicle width until the entire sub-grade is tested.
2. *Mitigation.* The City will analyze, determine, designate, and measure the areas, if any, requiring additional compaction or reconstruction.
3. *Sub-grade Protection.* Once sub-grade passes the proof rolling test, protect the surface from construction operations and traffic damage. Repair all cuts, ruts, and breaks. Keep surface in a satisfactory condition until geotextile fabric or base course has been placed.

D. Thickness Test. Material thickness tests will be conducted by the City when the City Engineer or his/her designee considers it necessary. The total depth shall be reasonably close to that shown on the typical section. Depth analysis shall be made on at least four holes for each section. Base thickness shall be accepted if 75% of the test holes are less than 1/4" below the specified thickness and no individual hole shall be more than 3/4" below the specified thickness.

250.030. Landscaping and Irrigation Sprinkler Systems.

A. Plant Material Inspection. All plant materials are to be inspected and approved by the City at the time of delivery on site. This approval does not constitute final acceptance of any plant material by the City Parks Department Representative. All plant materials will be inspected again at time of final inspection and once again at the end of the warranty period. Any plant found to be unacceptable at any of these inspections shall be immediately removed and replaced.

B. Sprinkler System Assembly Inspection. An on-site inspection shall be conducted by the City after the entire sprinkler system is assembled and prior to backfilling the trenches. During this inspection all fittings, bends, sweeps, valves, sprinkler heads and any other appurtenance on the system shall be surveyed by the City.

C. Fall Sprinkler Winterizing Test. In the fall of the year during the installation and guarantee period, the Contractor shall meet with the City on the project site. The Contractor shall winterize the system by draining all the water and doing everything necessary to insure the protection of the system until spring. Blowing out the lines by compression shall be permitted during the 1 year guarantee. The individuals involved from both parties shall exchange all information necessary for the eventual takeover of the system by the Alpine City Maintenance Personnel.

D. Spring Sprinkler Energizing Test. The Contractor with the City Maintenance Personnel in attendance shall energize the sprinkler irrigation system the spring following the fall winterizing test. Contractor shall repair all defects found as a result of winter damage, improper installation, improper maintenance, defective materials or inadequate sprinkler drainage.

E. Final Acceptance Inspection. At the end of the guarantee period, all landscaping and irrigation sprinkler systems must then be inspected and tested by the City. As-built drawings shall be furnished to the City at the time of the final inspection.

Irrigation sprinkler systems must operate in a satisfactory manner, with a full uniform coverage of the areas that are indicated to be sprinkled. Sprinkler heads shall be adjusted to proper level.

Landscape and irrigation sprinkler systems will not be inspected for acceptance in parts. Where inspected work does not comply with requirements, Contractor shall replace rejected work and continue specified maintenance until reinspected by the City and found to be acceptable. Remove rejected plants and materials promptly from the project site.

250.040. Portland Cement Concrete Work.

A. General. All materials and processes involved in concrete work shall be subject to inspection and testing as detailed in the various paragraphs of this section and in general compliance with ASTM E105-54T. Results of tests performed by laboratories approved by the City to the satisfaction of the City Engineer or his/her designee shall be accepted by the supplier as a basis for acceptance or rejection of any and all materials.

The latest appropriate ASTM tests and methods shall be considered to be standard, and will include but not be limited to concrete, cement, aggregates additives, curing compounds, parting compounds and jointing materials. A copy of all batch tickets for concrete placed shall be submitted to the City.

B. Slump, Temperature and Air Entrainment Test. The Contractor shall test slump, temperature, and air entrainment on every fifty cubic yards or less of concrete placed each day. Tests shall be taken after ½ to 1 yard has been poured from the mixer. Once a sample is taken the concrete pour shall be stopped until tests show that the concrete meets City standards. Concrete that does not meet mix design requirements for slump, temperature, and air entrainment shall not be used. Any that may already have been poured shall be removed before hardening.

C. Compression Test. The Contractor shall test compression on every fifty cubic yards or less of concrete placed each day according to ASTM C143, C231. C1064, C172, and C31. Three cylinder specimens shall be taken for each test, one shall be broken at 7 days, one at 28 days and the third held for 45 days after submittal in case further testing is required.

Specimens shall attain the specified strength at 28 days. One lot is 1 day's production. A lot with sub-standard compressive strength may be accepted at reduced price if the appropriate pay factor is applied to the whole lot. The following table outlines the pay factors for sub-standard Portland cement concrete strength:

PORTLAND CEMENT CONCRETE
COMPRESSIVE STRENGTH PAY FACTORS

Pay Factor	**Tolerance (psi below 28 day specified strength)**
0.98	1 to 100
0.94	101 to 200
0.88	201 to 300
0.80	301 to 400
0.50	401 to 500
Replace	More than 500

These pay factors may not be applied toward concrete in structures.

D. Forms and String Line Inspection. The City shall inspect all forms and string lines before concrete may be placed.

E. Gutter Drainage Inspection. The City shall inspect all gutters for drainage prior to paving. Water shall be let into all gutters and any gutters with standing water in excess of 1/4 inch after runoff shall be replaced. Contractor must supply water truck for gutter drainage inspection.

F. Thickness Test. The City shall determine the number, if any, and location of core tests necessary to ensure the proper thickness of Portland cement concrete. Tests shall be taken at equal intervals in a test area. A test area shall be defined as a total area placed at the same time and by the same process. The average thickness shall then be determined from all the cores taken. Tests shall be taken and verified by a certified testing lab, paid for by the Contractor.

When the average thickness is more than 0.25 inches below the specified thickness, a minimum of 1 core per 1,500 square feet of pavement shall be taken. Work with sub-standard thickness may be accepted at reduced price if the appropriate pay factor for the lowest tested thickness is applied to all of the sub-standard work. The following table outlines the pay factors for sub-standard Portland cement concrete thickness:

PORTLAND CEMENT CONCRETE
THICKNESS PAY FACTORS

Pay Factor	Tolerance (inches below specified thickness)
1.00	0.00 to 0.25
0.90	0.26 to 0.50
0.70	0.51 to 0.75
0.50	0.76 to 1.00
Replace	More than 1.00

G. Curing Inspection. The City shall inspect the curing of all Portland cement concrete work within 24 hours of pouring the concrete.

250.050. Pressurized Irrigation.

A. General. The inspections and tests in this section are required for all pressurized irrigation construction in the City boundaries and on all construction relating to the City pressurized irrigation system outside the city boundaries.

B. Main Line Inspection. The City must inspect all pressurized irrigation main line installation on an ongoing basis. Inspection notification must be given before any construction of the main line may begin. All crosses, tees, bends, valves, and drains must be inspected and surveyed by the City before they are backfilled.

C. Pressurized Irrigation Service Inspection. The City must inspect all pressurized irrigation services before service trenches are backfilled. The City must be able to survey services at the main during the inspection.

D. Pressure Test. The Contractor must pressure test all pressurized irrigation systems, system extensions and service laterals to the setter in the presence of the City Engineer or his/her designee or have tests documented and submitted by a certified testing company approved by the City. Pressure tests must meet the requirements and specifications of APWA 33 08 00 (Commissioning of Water Utilities). Provide a 210 psi test pressure for 2 hours unless specified otherwise. The pressure of 210 psi must be provided at the highest point in the section of pipe being tested unless elevations are such that this would create pressures over 250 psi at the lowest point in the section of pipe tested. In such a case, consultation with the City Engineer is required and AWWA standards will be considered.

E. Leakage Test. Leakage tests shall be conducted concurrently with the pressure tests. Leakage shall be defined as the quantity of water that must be supplied into the newly laid pipe, or any valved section thereof, to maintain pressure within 5 psi of the specified test pressure after the air in the pipeline has been expelled and the pipe has been filled with water.

No pipe installation will be accepted if the leakage is greater than that determined by the following formula:

$$Q \equiv \frac{LD * \sqrt{P}}{133{,}200}$$

In which Q is the allowable leakage, in gallons per hour; L is the length of pipeline tested in feet; P is the average test pressure, in pounds per square inch (gage) and D is the nominal diameter of the pipe in inches.

If any test of pipe laid discloses leakage greater than specified, the Contractor shall, at their own expense, locate and repair the defective material until the leakage is within the specified allowance. All visible leaks are to be repaired regardless of the amount of leakage.

250.060. Sanitary Sewer.

A. General. The inspections and tests in this section are required for all sanitary sewer construction in the City boundaries and on all construction relating to the City sanitary sewer system outside the city boundaries.

B. Main Line Inspection. The City must inspect all sanitary sewer main line installation on an ongoing basis. Inspection notification must be given before any construction of the main may begin.

C. Service Inspection. The City must inspect all sanitary sewer services before service trenches are backfilled. The City must be able to survey services at each end during the inspection.

D. Air Pressure Test. Contractor shall conduct a low pressure air test by the following method under the direction of the City Engineer or his/her designee with equipment equal to Cherne Industrial, Inc., or provide proof that test was conducted by a certified testing company. Sanitary sewer pipes with inside diameters of 30 inches or larger shall be leak tested according to manufacturer's specifications.

All wyes, tees, or ends of lateral stubs shall be suitably capped and braced to withstand the internal test pressures. Caps shall be easily removable for future lateral connections or extensions. After a manhole to manhole section of line has been backfilled and cleaned, it shall be plugged at each manhole with pneumatic plugs.

Low pressure air shall be introduced into the sealed line until the internal air pressure reaches 4 psi-G greater than the average back pressure of any ground water that may be over the pipe. At least 2 minutes shall be allowed for the air pressure to stabilize.

The portion of line being tested shall be accepted if the portion under test does not lose air at a rate greater than 0.003 cubic feet per minute per square foot of internal pipe surface or 2.0 cubic feet per minute minimum when tested at an average 3.0 psi-G greater than any back pressure exerted by ground water that may be over the pipe at the time of the test.

The pipe and joints shall also be considered acceptable when the time required in minutes for pressure to decrease from 3.5 To 2.5 psi-G (greater than the average back pressure of any ground water that may be over the pipe) shall not be less than the time shown for the given diameters in the following table:

PRESSURE REDUCTION TIME LIMITS

Pipe Diameter (inches)	Time (minutes)
4	2.0
6	3.0
8	4.0
10	5.0
12	5.5
15	7.5
18	8.5
21	10.0
24	11.5

If the installation fails to meet this requirement, the Contractor shall determine at his/her own expense the source of leakage. He shall repair or replace all defective materials and/or workmanship. All sanitary sewer mains shall be tested, cleaned and accepted by Alpine City before laying the street surface.

E. Video Inspection. Contractor shall clean and provide the City with video inspection of all sanitary sewer main lines **prior to paving**. The City must approve video inspection company.

Cleaning shall be done using a high pressure jet cleaning machine, producing a minimum of 800 psi. Waste water and debris shall not be permitted to enter the City sanitary sewer system, but shall be removed at the lowest manhole of the extension.

Video Inspection shall be done by the Contractor. A digital video disk (DVD or thumb drive) of video inspection and log report shall be submitted by the inspection company to the City Engineer or his/her designee.

Main line determined to be defective by the City Engineer or his/her designee shall be remedied by the Contractor. Contractor shall then clean and video inspect the main lines again.

F. Deflection Test. Contractor shall perform a displacement test on all sewer lines after video inspection. Deflections tests must be conducted in the presence of the City Engineer or his/her designee or be documented and submitted by a certified testing company approved by the City. In no case shall pipe be accepted that has a deflection of more than 5% after it has been backfilled. The Mandrel must be pulled by hand or air. A pipe deflection test shall be required of the Developer/Contractor after backfilling and compaction of the trench.

250.070. Storm, Land and Groundwater Drains.

A. General. The inspections and tests in this section are required for all storm, land and groundwater drain construction in the City boundaries and on all construction relating to the City storm, land and groundwater drain system outside the city boundaries.

B. Main Line Inspection. The City must inspect all storm, land and groundwater drain main lines during installation on an ongoing basis. Inspection notification must be given before any construction of the pipe may begin. All groundwater drains shall be pre-approved by the City Engineer or his/her designee.

C. Air Pressure Test. Contractor shall conduct a low pressure air test for all sealed drains by the following method under the direction of the City Engineer or his/her designee with equipment equal to Cherne Industrial, Inc., or provide proof that test was conducted by a certified testing company. Storm drain pipes with inside diameters of 30 inches or larger shall be leak tested according to manufacturer's specifications.

All wyes, tees, or ends of lateral stubs shall be suitably capped and braced to withstand the internal test pressures. Caps shall be easily removable for future lateral connections or extensions. After a manhole to manhole section of line has been backfilled and cleaned, it shall be plugged at each manhole with pneumatic plugs.

Low pressure air shall be introduced into the sealed line until the internal air pressure reaches 4 psi-G greater than the average back pressure of any ground water that may be over the pipe. At least 2 minutes shall be allowed for the air pressure to stabilize.

The portion of line being tested shall be accepted if the portion under test does not lose air at a rate greater than 0.003 cubic feet per minute per square foot of internal pipe surface or 2.0 cubic feet per minute minimum when tested at an average 3.0 psi-G greater than any back pressure exerted by ground water that may be over the pipe at the time of the test.

The pipe and joints shall also be considered acceptable when the time required in minutes for pressure to decrease from 3.5 To 2.5 psi-G (greater than the average back pressure of any ground water that may be over the pipe) shall not be less than the time shown for the given diameters in the following table:

PRESSURE REDUCTION TIME LIMITS

Pipe Diameter (inches)	Time (minutes)
4	2.0
6	3.0
8	4.0
10	5.0
12	5.5
15	7.5
18	8.8
21	10.0
24	11.5

If the installation fails to meet this requirement, the Contractor shall determine at his/her own expense the source of leakage. He shall repair or replace all defective materials and/or workmanship. All storm drain lines shall be tested, cleaned and accepted by Alpine City before laying the street surface.

D. Video Inspection. Contractor shall clean and then video inspect all storm, land and groundwater drain lines before paving. The City must approve video inspection company.

Cleaning shall be done using a high pressure jet cleaning machine, producing a minimum of 800 psi. Debris shall not be permitted to enter the City storm drain system.

Video inspection shall clearly show any debris, broken pipe, misaligned pipe, displaced pipe and defective joints for all sections of the main line. All defects and their location shall be detailed on a separate video log report. A digital video disk (DVD or thumb drive) of video inspection and log report shall be submitted by the inspection company to the City Engineer or his/her designee.

Log reports shall be submitted on the City video form or an approved equivalent. Log reports must be submitted with an 11x17 copy of the plans. All manholes in the log report must reference the labeled manholes numbers on the plans. Each manhole must also have a street address clearly shown on the log report.

E. Deflection Test. Contractor shall perform a displacement test on all non-concrete storm drain lines after video inspection. Deflections tests must be conducted in the presence of the City Engineer or his/her designee or be documented and submitted by a certified testing company approved by the City. In no case shall pipe be accepted that has a deflection of more than 5% after it has been backfilled. The Mandrel must be pulled by hand or air. A pipe deflection test shall be required of the Developer/Contractor after backfilling and compaction of the trench.

250.080. Streets.

A. Asphalt Pavement Material Tests. Material tests will be conducted by the Contractor when the City Engineer or his/her designee considers it necessary.

B. Compaction Tests. The Contractor will test all bituminous pavement for compaction and moisture content. Test locations shall be determined by the City but will generally be taken 3 per 200 lineal foot of street or 1 per 2,000 square foot of paved area. Pay factors as per APWA 32 12 16 (Plant-Mix Asphalt Paving) shall apply.

C. Grading Inspection. The sub-grade, sub-base, and road base shall all be graded to an engineered red-head and accepted by Alpine City. Red-heads shall be placed every 50 feet at the crown of the road. If the distance between red-heads and edge of pavement exceeds 25 feet additional redheads shall be installed half way between the crown and edge of pavement. Red-heads shall also be placed every 50 feet at the edge of pavement where there is no curb and gutter.

D. Thickness Test. Material depth tests will be conducted by the City when the City Engineer or his/her designee considers it necessary. The total depth shall be reasonably close to that shown on the typical section. Depth analysis shall be made on at least four holes for each section. Base thickness shall be accepted if 75% of the test holes are less than 1/4" below the specified thickness and no individual hole shall be more than 3/4" below the specified thickness. Work with sub-standard thickness may be accepted at reduced price if the appropriate pay factor for the lowest tested thickness is applied to all of the sub-standard work. The following table outlines the pay factors for sub-standard asphalt pavement thickness:

PAVEMENT DEPTH PAY FACTORS

Pay Factor	Tolerance (inches below specified thickness)
0.95	0.00 to 0.25
0.90	0.26 to 0.50
Replace	More than 0.5

E. Profile Tolerance Inspection. Profile tolerance inspections may be required by the City any time within a year of paving. Collector and arterial streets shall meet the "Tolerances" requirements of APWA 32 12 16 (Plant-Mix Asphalt Paving). For local streets profiling, the maximum vertical distance from the pavement surface to a straight edge is:

a. 1/4-inch in 10-feet parallel to centerline.
b. 3/8-inch in 10-feet perpendicular to centerline except at cross section grade breaks.

F. Asphalt Concrete Temperature Test. This test shall be conducted on the first three loads of asphalt concrete installed, and on one in four of all future loads as required by the City. Testing shall be conducted according to the requirements and specifications of APWA 32 12 16 (Plant-Mix Asphalt Concrete Paving). Temperature gauge shall be allowed to stabilize for 1 minute before taking reading if using probe type. If using infra-red "gun" type, reading shall consist of an average of a minimum of 3 readings, where reading is taken immediately after displacing a minimum of 2 inches of material from the surface being tested and the "gun" is within 18" of the surface being tested.

G. Asphalt Paving Limitations. In the event the City Engineer approves a paving plan proposed between November 15th and April 1st, and if temperatures never rise above 60 degrees during the paving process, an overlay in the spring will be required as outlined in the table below. Do not place HMA on frozen base or during adverse climatic conditions such as precipitation or when roadway surface is icy or wet. Use a release agent that does not dissolve asphalt and is acceptable to the City Engineer or his/her designee for all equipment and hand tools used to mix, haul, and place the HMA. Placement of HMA between November 15th and April 1st will be allowed when the air temperature in the shade and the roadway surface temperature are above 45 degrees Fahrenheit. Paving that occurs between the dates below, which requires a spring overlay, shall be finished 1.5 inches below lip of curb to accept the required 2-inch overlay in the spring.

PAVEMENT DEPTH AFTER NOVEMBER 15TH / BEFORE APRIL1ST
TEMPERATURES ARE BETWEEN **45-50 DEGREES** FAHRENHEIT*

Street	Typical	Base Asphalt	Spring Overlay	Total Asphalt
Local / Secondary Access / Parking Lots / Driveway	3"	3"	2"	5"
Collector / Arterial	4"	3"	2"	5"

*See 2017 APWA 32-12-16.13. If temperatures are between 45-50 degrees, the minimum lift to be placed at a time must be 3 inches to retain heat and obtain compaction. 50-59 degrees, 2 inches minimum lift. 60-69, 1.5 inches minimum lift.

PAVEMENT DEPTH AFTER NOVEMBER 15TH / BEFORE APRIL1ST
TEMPERATURES ARE BETWEEN **50-60 DEGREES** FAHRENHEIT*

Street	Typical	Base Asphalt	Spring Overlay	Total Asphalt
Local / Secondary Access / Parking Lots / Driveway	3"	2.5"	2"	4.5"
Collector / Arterial	4"	3"	2"	5"

PAVEMENT DEPTH AFTER NOVEMBER 15TH / BEFORE APRIL1ST
TEMPERATURES ARE ABOVE **60 DEGREES** FAHRENHEIT*

Street	Typical	Base Asphalt	Spring Overlay	Total Asphalt
Local / Secondary Access / Parking Lots / Driveway	3"	3"	n/a	3"
Collector / Arterial	4"	3"	n/a	4"

250.090. Drinking Water.

A. General. The inspections and tests in this section are required for all drinking water construction in the City boundaries and on all construction relating to the City drinking water system outside the city boundaries.

B. Main Line Inspection. The City must inspect all drinking water main line installations on an ongoing basis. Inspection notification must be given before any construction of main line may begin. All crosses, tees, bends, valves and hydrants must be inspected and surveyed by the City before they are backfilled.

C. Drinking Water Service Inspection. The City must inspect all drinking water services before service trenches are backfilled. The City must be able to survey services at the main during the inspection.

D. High Chlorine Test. High Chlorine tests shall meet the requirements and specifications of APWA 33 13 00 (Disinfection). The Contractor must conduct a high chlorine test at every hydrant on a new drinking water main installation. If a hydrant does not exist on the test section, tests must be taken at the end of each line. The chlorine residual shall be at least 25 mg/L.

E. Pressure Test. Pressure test must be conducted after the successful completion of the bacteria test. The Contractor must pressure test all drinking water systems, system extensions and service laterals to the setter in the presence of the City Engineer or his/her designee or have tests documented and submitted by a certified testing company approved by the City. Pressure tests must meet the requirements and specifications of APWA 33 08 00 (Commissioning of Water Utilities). Provide a 210 psi test pressure for 2 hours unless specified otherwise. The pressure of 210 psi must be provided at the highest point in the section of pipe being tested unless elevations are such that this would create pressures over 250 psi at the lowest point in the section of pipe tested. In such a case, consultation with the City Engineer is required and AWWA standards will be considered.

F. Leakage Test. Leakage tests shall be conducted concurrently with the pressure tests. Leakage shall be defined as the quantity of water that must be supplied into the newly laid pipe, or any valved section thereof, to maintain pressure within 5 psi of the specified test pressure after the air in the pipeline has been expelled and the pipe has been filled with water.

No pipe installation will be accepted if the leakage is greater than that determined by the following formula:

$$\boxed{Q \equiv \frac{LD * \sqrt{P}}{133{,}200}}$$

In which Q is the allowable leakage, in gallons per hour; L is the length of pipeline tested in feet; P is the average test pressure, in pounds per square inch (gage) and D is the nominal diameter of the pipe in inches.

If any test of pipe laid discloses leakage greater than specified, the Contractor shall, at their own expense, locate and repair the defective material until the leakage is within the specified allowance. All visible leaks are to be repaired regardless of the amount of leakage.

G. Bacteria Test. Bacteria tests shall meet the requirements and specifications of APWA 33 13 00 (Disinfection). Tests may only be scheduled at certain regular times set by the City. The Contractor shall be present and open all hydrants or other locations to be tested from. The City shall submit samples to a certified lab to be tested according to state drinking water regulations.

If any sample point fails on the first test, the line will be flushed and re-tested at all sample points. If any sample point fails a second time, the complete line will be re-disinfected and re-tested at all sample points. If any samples come back marked “presence”, which means coli form bacteria is present, the line will be re-disinfected and re-tested at all sample sites. Contractor is responsible to pay for all bacteria tests and retests.

Drinking water services will not be installed until bacteria sample results have been approved by the City Engineer or his/her designee. All testing lab fees shall be paid for by the Contractor.

Section 300. Contractor Requirements.

SECTION INDEX

300.010. General.
A. Contractors Working for a Developer.
B. Contractors Working for the City.
C. Status Verification System.

300.020. Insurance.
A. General.
B. Workers' Compensation.
C. Commercial General Liability Insurance.
D. Automobile Liability Insurance.

300.030. Bonding.
A. General.

300.040. Excavation Permits.
A. General.
B. Contractors.
C. Property Owners.

300.050. Inspection Fees.
A. General.

300.060. Materials Submittals.
A. General.

300.070. Quality Control.
A. General.
B. Materials Production.
C. Testing and Inspection.

300.010. General.

A. Contractors Working for a Developer. Contractors and Sub-Contractors working for a Developer must prequalify before doing any work in existing or proposed City property, streets, easements, or right-of-way and for any work on existing or proposed City utilities. To prequalify the following must be on file in the City Engineer's office:

1. A current Contractor's license specified for project type according to Utah State Code;
2. Insurance information;
3. Contractor information sheet;
4. Project Bond;
5. Excavation Permit;
6. UDOT Permit for construction in state right-of-way; and

Failure to pre-qualify before doing any construction shall constitute grounds for legal action.

B. Contractors Working for the City. Bids for City projects will only be awarded to the lowest responsible bidder with current contractor's license specified for the project type according to the Utah State Code. The City's contractor qualifications and experience forms shall be completely filled out and submitted with bid. Failure to do so is basis to reject the bid. Alpine City reserves the right to determine a non-responsible bidder based upon these forms or any other research conducted by the city.

C. Status Verification System. Contractor agrees that it, and its subcontractors, will register with and use a Status Verification System to verify the federal employment authorization status of all employees hired after July 1, 2009. Contractor, and its subcontractors, will comply, in all respects, with Utah Code Annotated §63g-11-103, as it may be amended from time to time.

300.020. Insurance.

A. General. A Contractor must acquire the insurance stipulated in this section to prequalify to do construction work. The city must receive and accept proof of the insurance before any work may begin. The submittal of said evidence to the City shall not relieve or decrease the liability of the Contractor hereunder.

B. Workers' Compensation. Contractor shall obtain workers compensation insurance as required by State law.

C. Commercial General Liability Insurance. The following commercial general liability insurance must be obtained and submitted on ISO Form CG 00 01 (11/85) or equivalent, occurrence policy, with limits not less than:

1.	General Aggregate	$1,000,000
2.	Products - Comp/OPS Aggregate	$1,000,000
3.	Personal and Advertising Injury	$ 500,000
4.	Each Occurrence	$ 500,000
5.	Fire Damage (any one fire)	$ 50,000
6.	Medical Expense (any one person)	$ 5,000

Also include the follow endorsements or their equivalents attached thereto:

1. ISO Form CG 25 03 (11/85), Amendment of Limits of Insurance (Designated Project or Premises), describing the subject contract and specifying limits as shown above.
2. ISO Form CG 20 10 (11/85), Additional Insured -- Alpine City, Lessees, or Contractors (Form B), naming the City as additional insured and containing the following statement, "This Endorsement Also Constitutes Primary Coverage in the Event of any Occurrence, Claim, or Suit".

D. Automobile Liability Insurance. Contractor shall obtain automobile liability insurance with limits of not less than $500,000 Combined Single Limit per accident. Coverage shall apply to any auto.

300.030. Bonding.

A. General. The owners and/or developers of property shall deposit security with the City prior to recording the final plat to guarantee proper installation of all required improvements in accordance with the plans, specifications, time limitations, and conditions relating thereto as meets with the approval of the City Council or such personnel as the City Council shall designate. Security shall be in the form of cash, an irrevocable letter of credit, surety bond, financial institution bond, or an escrow bond. The amount of the security shall be 110% of the City's estimated costs of the improvements plus the estimated asphalt preservation coat costs.

Irrevocable letters of credit or escrow bonds shall be executed by financial institutions acceptable to the City and authorized to conduct business in the State of Utah, and must be in the form approved by the City. The bond or letter of credit as required by this section must be posted prior to recording. Upon completion of the punch list for the end of construction inspection, the security, less 10%, shall be released to the Developer. Ten percent (10%) of the security amount shall be held for a period of one (1) year following final inspection and acceptance to warrant improvements for this time period. The ten percent retained shall be the amount required as the minimum security. The amount estimated for the asphalt preservation coat shall be deposited to the City in the form of cash and held in escrow prior to recording. These funds will be held until used for the asphalt preservation coat for the applicable development either by the developer or City (see 600.020).

300.040. Excavation Permits. (aka – Street Cut Permit)

A. General. Contractors are required to qualify before obtaining an excavation permit to do construction work unless a project is already approved, bonded and insured. The permit must be approved 48 hours prior to construction. The permitee is given a copy of the permit and plan after the City Engineer or his/her designee has approved and signed them.

The City may stipulate time limits for completion of work and suspend permits for non-compliance. A copy of the excavation permit shall be on site during construction. The following fee factors shall be applied toward excavation permits for more recently paved streets:

FEE FACTORS

Fee Factor	Age of Pavement
4.00	Less than 1 Year
3.00	1 to 3 Years
2.00	3 to 5 Years
1.50	5 to 10 Years

If utilities are bored then the excavation permit fee shall be reduced by one half.

B. Contractors. Contractors are required to submit the following information to obtain an excavation permit:
   1. Copy of Contractors license;
   2. Certificate of Insurance;
   3. License and permit bond of $10,000.00;
   4. Detailed drawing of proposed work and traffic control (4 copies).

C. Property Owners. Individual property owners doing his/her own work for drive approaches and other similar, minor concrete work in the City right-of-way are required to submit the following information to obtain an excavation permit:
   1. Proof of homeowners or similar insurance;
   2. Detailed drawings of the proposed work, including safety, barricades, traffic and pedestrian control.

Any cuts or changes to the curb shall be performed by a licensed contractor who has obtained an excavation permit or building permit.

300.050. Inspection Fee.

A. General. For bonded developments, an inspection fee will be collected. The fee will be for city costs relating to the construction. These costs include but are not limited to survey, inspection, testing and administration. The fee will be estimated based upon previous projects. Portions of the fee not used shall be refunded to the Developer after the punch list of the final acceptance inspection is completed.

If City costs relating to inspection exceed the inspection fee, these costs will be paid for by the developer or they will be deducted from the 10% warranty portion of the bond.

300.060. Materials Submittals.

A. General. Contractors are required to provide materials submittals for all materials to be used to the City for review and approval.
   1. For pre-manufactured items, documentation must be submitted a minimum of 2 weeks before installation and must include sufficient information, including shop drawings, if applicable, to establish models, colors, sizes, installation requirements, etc. that will be used.
   2. For on-site manufactured items, such as asphalt, concrete or base courses, submit mix designs, hot/cold weather installation plans, and materials certifications a minimum of 5 working days prior to planned installation.
   3. Submittals for the following, at a minimum, should be submitted:
      a. All pre-manuctured items meeting city standards such as light fixtures, electrical components, utility fixtures and piping, landscaping, etc.
      b. Hot Mix Asphalt Mix Designs
      c. Portland Cement Concrete Mix Designs
      d. Treated Base Course Mix Designs
      e. Untreated Base Course Job Mix Formulas
      f. Tack and Prime Coats
      g. Concrete Curing Compounds
   4. Submit copies of all Quality Control testing and inspection reports within 48 hours of placement of materials.

300.070. Quality Control.

A. General. Perform Quality Control work in accordance with applicable materials sections of the APWA Standard Specifications unless otherwise directed.

   The contractor is responsible for performing quality control work sufficient to meet requirements of APWA Standard Specifications and to demonstrate compliance with acceptance criteria. The City will perform assurance functions at their discretion and inform the contractor of acceptance or rejection.

B. Materials Production Use UDOT certified facilities for asphalt and Portland cement concrete.
   1. Submit verification of Plant Certifications with mix designs.

C. Testing and Inspection. Use UDOT certified laboratories and personnel.
   1. Submit names, certificate levels and years of experience of testing agency's Field Technician that are assigned to work. Laboratory must comply with ASTM Standards. Use AMRL certified laboratory and WAQTC/UDOT TTQP certified technicians.
   2. Submit verification of lab and personnel with mix designs.

Section 350. Earthwork and Trenches.

SECTION INDEX

350.010. Excavation.
A. General.
B. Safety.
C. In Gravel and Paved Surface Areas.
D. In Areas with Concrete.
E. Rock Excavations.
F. Site Clearing and the Disposal of Excess Materials.

350.020. Sub-surface Pipe Installation.
A. General.
B. Boring or Jacking.
C. Tunneling.

350.030. Sub-grade.
A. Preparation.
B. Soft and Yielding Areas.
C. Trenches.
D. Roads.
E. Structures.

350.040. Fill Material.
A. General.
B. Bedding Material.
C. Engineered Fill.
D. Untreated Base Course.
E. Cement Treated Fill.
F. Defective Fill.

350.050. Slopes, Embankments, Fills and Open Channels.
A. Preparation.
B. Material.
C. Grading.
D. Slope Safety.
E. Erosion and Sedimentation Control.
F. Gabions.
G. Rip Rap and Rock Lining.

350.060. Installation and Compaction of Earth Materials.
A. General.
B. Streets.
C. Soft and Yielding Spots.
D. Backfill in Trenches.
E. Pipe Zone.

350.070. Geotextiles, Geogrids and Geocomposites.
A. General.

350.010. Excavation.

A. General. Excavation shall meet the requirements and specifications of APWA 31 23 16 (Excavation) unless otherwise indicated.

B. Safety. All construction shall be done in accordance with the provisions of the Utah State Industrial Commission, OSHA regulations and APWA 31 23 16 (Excavation). No trenches deeper than 4 feet shall be left open at any time unless construction is in process. When construction is in process only 200 feet of trench may be open at one time and must be completely backfilled before proceeding. No trenches shall be left open at any time unless guarded with adequate barricades, warning lamps and signs.

Any injury or damage resulting from lack of adequate bracing and shoring shall be the responsibility of the Developer/Contractor and the Developer/Contractor shall, at his/her own expense, effect all necessary repairs or reconstruction resulting from such damage. No inspections will be done in unsafe trenches and will be the cause for immediate shutdown at the project until the trench is deemed to be safe by the City Engineer or his/her designee.

C. In Gravel and Paved Surface Areas. Where any excavation occurs in a gravel or paved surface area such as a road, driveway or parking area, the surface shall be restored according to the requirements and specifications of APWA 33 05 25 (Pavement Restoration, requires t-patching on trenches) and the following conditions:

1. *Base.* Only Engineered Fill (Section 350.040.C) may be used as backfill or sub-base material under gravel and paved surfaces. A minimum of 8 inches of untreated base course shall be placed over backfill or sub-base. All fill material shall be placed and compacted to City standards. Flowable fill shall not be allowed for backfill unless authorized by the City.
2. *Surface Maintenance.* The surface shall be maintained by blading, sprinkling, rolling, adding gravel, etc., to maintain a safe uniform surface satisfactory to the City.
3. *Cutting of Pavement.* Before any excavation in a paved area, the surface along the entire excavation shall be cut to provide a vertical joint in the surface. Cut shall be made 6 inches from the edge of excavation in straight lines parallel or perpendicular to the trench or edge of pavement. A pavement saw shall be used for all pavement cutting. If excavation damages the cut pavement, pavement shall be cut again before t-patching. A roto-milled edge shall be acceptable as a cut.
4. *Time Limitation.* All road cuts shall be repaired within 2 working days of excavation unless otherwise authorized by the City Engineer or his/her designee.
5. *Cold Weather Patching.* Trenches cut during winter months or when roadbed temperatures and temperatures in the shade are less than 40 degrees (APWA 33 05 25) or when asphalt plants are not operating, shall be patched the same day of the cut with a good quality cold mix according to the requirements and specifications of APWA 32 12 17 (Cold-Mix Asphalt Paving). These trenches shall be maintained until asphalt plants open. When asphalt plants open, the temporary cold patch shall be removed and a new t-patch (per APWA Plan 255) of hot mix asphalt shall be placed. All cold mix patches shall be replaced with hot mix patches within 30 days of the opening of the hot mix plant.
6. *Adjust Incidental Structures to Grade.* Adjust incidental structures to grade according to APWA 33 05 14 (Utility Grade Adjustment). City standard concrete collars around valves and manholes shall be installed within 1 year from the time that pavement is placed or at the time of an overlay.
7. *Residential vs Non-residential streets.* APWA 33 05 25 mentions "*Match existing pavement thickness plus 1 inch, but not less than four (4) inches. Maximum thickness is six (6) inches in residential areas and eight (8) inches in non-residential areas."* Residential areas are to be defined as Local, Secondary Access, or Parking Lots per the most currently adopted Alpine City Transportation Master Plan. Non-residential is to be defined as Collector or Arterial Class streets per the most currently adopted Alpine City Transportation Master Plan.

D. In Areas with Concrete. When damaged, existing concrete improvements shall be removed and replaced to the next joint or scoring line beyond the damaged or broken sections. In the event that joints or scoring lines do not exist or are three or more feet from the removed or damaged section, the damaged portions shall be removed and reconstructed to neat, plane faces. All concrete work shall meet the requirements and specifications of Section 650. Portland Cement Concrete Work and APWA 33 05 25 (Pavement Restoration).

E. Rock Excavations. Rock excavations shall meet the requirements and specifications of APWA 31 23 17 (Rock Removal).

F. Site Clearing and the Disposal of Excess Materials. Site clearing shall be conducted according to APWA 31 11 00 (Site Clearing). All excavation material, which is not required for construction or is unsuitable for fill material, shall be immediately disposed of by the Contractor. All roads, sidewalks, curbs, gutters and ditches shall be kept clean of excavated material except as outlined in Title 14.08.05 (Clean Streets) of the Alpine City Municipal Code.

All demolition work shall meet the requirements and specifications of APWA 02 41 13 (Selective Site Demolition), APWA 02 41 14 (Pavement Removal) and APWA 02 41 15 (Pavement Pulverizing).

Removal and disposal of Asbestos Cement Pipe shall be per the Utah Department of Environmental Quality (DEQ) Division of Air Quality (DAQ) guidance document, *How to Handle Non-friable Asbestos Cement Pipe, A Guide for Meeting Utah Department of Environmental Quality/Division of Air Quality Rule*s ("Guidance").

350.020. Sub-surface Pipe Installation.

A. General. Pipes, conduits or casings, 4 inches in diameter or less, may be bored, jacked, augured or jetted under sidewalk, curb, gutter if authorized by the City Engineer or his/her designee. The resulting hole diameter shall not exceed 1 inch plus the outside diameter of the pipe or sleeve installed.

B. Boring or Jacking. Boring or jacking work shall meet the requirements and specifications of APWA 33 05 23 (Trenchless Utility Installation).

C. Tunneling. Where sidewalk, curb, and gutter exists, excavation may be made by tunneling provided the following requirements are met:

1. Excavation shall be vertical and as near to the curb or sidewalk as possible;
2. The length of the tunnel shall not exceed the width of the sidewalk, curb, and gutter;
3. Where a separate sidewalk and curb exist, an excavation shall be made between the sidewalk and the curb;
4. At least three feet of undisturbed earth shall be left under the sidewalk or curb; and
5. Where the sidewalk has been tunneled, the hole shall be filled from each end with flowable fill. Where the excavation cannot meet these requirements, a section of sidewalk, curb, or gutter, from joint to joint shall be removed and replaced.

350.030. Sub-grade.

A. Preparation. All sub-grade shall be shaped and compacted in reasonably close conformity with lines, grades and typical cross section as established by the City Engineer or his/her designee. All grading shall be based on an engineered survey, accepted by Alpine City.

In trenches and cut or fill areas the subgrade shall be scarified to a depth of 8 inches and compacted according to the compaction standards of this chapter. No rocks larger than 4 inches in diameter, organic material, soft clay, spongy material, or other deleterious material will be permitted in this scarified sub-grade layer.

B. Soft and Yielding Areas. Soft and yielding areas which do not compact to City standards shall be removed and replaced with enough compacted engineered fill to bridge the area. Trenches excavated within 10 feet of the lip of gutter shall be removed and replaced as part of the trench asphalt pavement repair, or otherwise approved by the City Engineer.

C. Trenches. When the sub-grade material does not afford a sufficiently solid foundation to support the pipe and superimposed load, the trench shall be over-excavated to a sufficient depth and backfilled with enough compacted fill as approved by the City to bridge the area.

D. Roads. Road sub-grades shall be shaped and graded to within a tolerance of 0.15 feet of design grade. Drainage shall be maintained at all times.

E. Structures. Sub-grade material for all concrete structures, regardless of type or location, shall be firm, dense, thoroughly compacted and consolidated; shall be free from mud and muck; and shall be sufficiently stable to remain firm and intact under the feet of the workmen engaged in sub-grade surfacing, laying reinforcing steel, and depositing concrete.

Coarse gravel or crushed stone may be used for subsoil reinforcement if results are satisfactory to the City Engineer or his/her designee. Such material shall be applied in layers, not exceeding 6 inches in thickness, each layer being embedded in the sub-soil by thorough tamping. All excess soil shall be removed to

compensate for the displacement of the gravel or crushed stone and the finished elevation of any subsoil reinforced in this manner and shall not be above the specified sub-grade.

The City Engineer may require a soil analysis and design for any area.

350.040. Fill Material.

A. General. All fill material shall be placed on sub-grade prepared according to the specifications of this chapter. All fill material shall be compacted according to the specifications of this chapter.

Only engineered fill or untreated base course may be used as fill material under and within a foot of streets, future street areas, driveways, and concrete unless otherwise specified. All fill material under and within a foot of electrical and communications boxes shall be untreated base course. In other areas native excavated material may normally be used unless such material cannot be properly compacted according to specifications in this chapter. All fill material, including native fill material, must be free from debris, organic material, and rocks larger than 4 inches in diameter and have a liquid limit not to exceed 35 and plastic limit not to exceed 15.

B. Bedding Material. Use APWA No. 4 sewer rock for gravity pipe bedding material. Use sand as a bedding material for pressure pipe and electrical and communication conduit. Bedding sand must compact sufficiently to support the pipe and shall meet the following gradation:

SAND GRADATION

Sieve/Screen Size	% Passing
No. 4	100
No. 200	10 to 20

C. Engineered Fill. Engineered fill shall be used for all imported material unless otherwise specified. Engineered fill shall be granular and well graded meeting the following gradation:

ENGINEERED FILL GRADATION

Sieve/Screen Size	% Passing
4"	100
¾"	70 to 100
No. 200	0 to 15

On that portion of the aggregate passing the No. 40 sieve, the liquid limit shall not exceed 30, nor shall the plasticity index exceed 15 when tested in accordance with AASHTO T89 and T90. Imported material under city streets shall have a minimum CBR of 25.

Reclaimed asphalt pavement (RAP) may NOT be used as engineered fill.

D. Untreated Base Course. All untreated base course shall meet the requirements and specifications of APWA 32 11 23 (Crushed Aggregate Base) Grade 3/4 for untreated base course. The use of slag as an untreated base course shall not be permitted.

E. Cement Treated Fill. Cement treated fill shall meet the requirements and specifications of APWA 31 05 15 (Cement Treated Fill). Cement treated fill includes following fill materials:
   1. Controlled low-strength material (CLSM) (flowable fill),
   2. Lime treated fill,
   3. Asphalt treated fill.

F. Defective Fill. Fill not conforming to the requirements of this specification shall be reworked to the requirements or removed and replaced with acceptable fill.

350.050. Slopes, Embankments, Fills and Open Channels.

A. Preparation. Unsuitable materials that occur in the foundation for slopes, embankments, and fills shall be removed by clearing, stripping, and/or grubbing. Where suitable materials occur, after stripping, the foundation shall be scarified to a depth of not less than 8 inches. All materials in slopes, embankments, and fills, including the scarified foundation layer, shall be placed, moistened, and compacted according to the compaction standards in this chapter.

B. Material. When the slope, embankment, or fill exceeds the amount of excavation, sufficient additional material shall be obtained from borrow pits provided by the Contractor. All material proposed to be imported shall be subject to the review and approval of the City Engineer or his/her designee prior any hauling operations.

The materials used for slope, embankment and fill construction shall be free from sod, grass, trash, rocks larger than 6 inches in diameter and all other material unsuitable for construction of compacted fills.

C. Grading. Grading of completed slope, embankment, or fill shall bring the surfaces to a smooth, uniform condition with final grades being within 0.1 foot of the design grade. All grading shall be done to an engineered red-head.

D. Slope Safety. All slope construction shall be in accordance with all City, State and Federal regulations. Plans and Specifications for structures must be approved by the City if the excavation is greater than five (5) feet. No permanent slopes steeper that 3:1 shall be allowed without a retaining structure unless otherwise approved in writing by the City Engineer or his/her designee. The width of the excavation shall be increased if necessary to provide space for sheeting, bracing, shoring and/or other supporting installations. Unsafe slopes will be the cause for immediate shutdown of the project.

E. Erosion and Sedimentation Control. Erosion and sedimentation control shall meet the requirements and specifications of APWA 31 25 00 (Erosion and Sedimentation Control).

F. Gabions. Gabions shall meet the requirements and specifications of APWA 31 36 00 (Gabions)

G. Rip Rap and Rock Lining. Rip rap and rock lining work shall meet the requirements and specifications of APWA 31 37 00 (Riprap or Rock Lining).

350.060. Installation and Compaction of Earth Materials.

A. General. The installation of all fill material shall meet the requirements and specifications of APWA 33 05 20 (Backfilling Trenches), APWA 31 23 23 (Backfilling Structures), APWA 32 05 10 (Backfilling Roadways) and APWA 31 23 26 (Compaction). Fill material outside of pavement areas, as defined by APWA 32 05 10 (Backfilling Roadways), and more than 24 inches from any utility box shall be compacted to not less than 90% of the maximum dry density.

B. Streets. Sub-base and road-base shall be graded to an engineered red head. Loose rock, roots, brush, and other materials that may be encountered in shaping the sub-base must be removed.

C. Soft and Yielding Spots. Any soft and yielding spots in the fill or sub-grade which do not compact to the specified density shall be removed and replaced with Engineered Fill installed and compacted to City standards.

D. Backfill in Trenches. Backfill shall be carefully placed around and over pipes and shall not be permitted to fall directly on a pipe from such a height or in such a manner as to cause damage.

E. Pipe Zone. The pipe zone includes the full width of trench from 3 inches below the pipe to 6 inches above the pipe for all pipes except for large reinforced concrete pipe (RCP). Large RCP includes RCP with internal diameters larger than 24 inches. The pipe zone for large RCP shall include the full width of trench from 6 inches below the pipe to 6 inches above the pipe. The pipe zone shall extend horizontally a minimum of 6 inches from either side of the pipe except for electrical and communication conduit. Electrical and communication conduit may be placed against the sides of trenches. Trenches shall be wide enough to compact fill material according to the specifications in this chapter.

The pipe zone for all pipes shall be filled with compacted bedding material. Pipe zone materials shall be placed and compacted under and around the pipe in horizontal layers not to exceed 8 inches and tamped by

hand or pneumatic tampers.

350.070. Geotextiles, Geogrids and Geocomposites.

A. General. All geotextile work shall meet the requirements and specifications of APWA 31 05 19 (Geotextiles). Geogrid and geocomposite work shall meet the requirements and specifications of APWA 31 05 21 (Geogrids/Geocomposites). Geotextile, geogrid and geocomposite work includes but is not limited to the following geotextile applications:

1. Stabilization-separation,
2. Silt fence,
3. Erosion control,
4. Roadway pavements,
5. Drainage,
6. Weed barrier
7. Granular base reinforcement,
8. Asphalt concrete reinforcement, and
9. Soil reinforcement.

Section 400. Drinking Water.

SECTION INDEX

400.010. General.
A. Specifications.
B. Pipe.
C. Size.
D. Location.
E. Unusual Piping and Plumbing.
F. Dead Ends.
G. Drains.
H. Surface Water Crossings.

400.020. Installation.
A. General.
B. Pipe Cleanliness.
C. Identification Tape.
D. Lateral Displacement.
E. Restraining.
F. Connections to Existing Drinking Water Lines.
G. Bedding.

400.030. Pipe and Fittings.
A. Polyvinyl Chloride Pipe (PVC).
B. Ductile Iron Pipe.
C. Polyethylene Pipe.
D. Steel Pipe - Lined and Coated.
E. Copper Tubing.
F. Fittings.

400.040. Valves and Couplings.
A. General.
B. Resilient Seated Gate Valve.
C. Butterfly Valve.
D. Valve Boxes.
E. Couplings.
F. Pressure Regulation Valves.
G. Tapping Valves.
H. Air Vacuum and Release Valves.
I. Isolation Valves.
J. Backflow Devices.

400.050. Fire Hydrants.
A. General.
B. Placement and Location.

400.060. Meters and Services.
A. General.
B. Placement and Location.
C. Meters.

400.070. Flushing.
A. General.
B. Velocity.

400.080. Disinfection of Drinking Water Lines.
A. Cleaning.
B. Methods.

400.010. General.

A. Specifications. These specifications cover the installation of drinking water lines. See Section 200 for improvement and design requirements, Section 250 for inspection and testing requirements, and Section 350 for earthwork and trench requirements. See standard drawings related to water.

B. Pipe. PVC or polyethylene pipe shall be used for all culinary drinking water mains unless otherwise authorized by the City Engineer or his/her designee. Polyethylene pipe shall be used for the service lateral in conjuction with PVC main lines. Where ductile main line exists, copper pipe is to be used for the service lateral. Special precautions shall be taken in areas of contamination. Pipe and joint materials which are not susceptible to contamination, such as permeation by organic compounds, shall be used. Non-permeable materials shall be used for all portions of the sytem including water mains, sercice connections, and hydrant leads. The Division of Drinking Water shall be contacted to establish specific design requirements in areas of contamination or potential contamination such as sewer treatment plants, septic systems, or industrial sites.

C. Size. The City Engineer or his/her designee must approve the sizes of all proposed drinking water lines. It is required to have the design hydraulically modeled by the City's designated Hydraulic Engineer, the Hydraulic Engineer must confirm that the design meets Utah Division of Drinking Water Standards. The minimum size of drinking water pipe is 8 inch diameter for main lines and 1 inch diameter for services unless otherwise authorized by the City Engineer or his/her designee.

D. Location. Drinking water mains shall be located on either the north or east sides of a street 4 feet from the edge of curb. All drinking water appurtenances shall conform to the minimum separation standards from sanitary sewer systems as outlined in Utah Code R309-550-7 and R309-550-12. See standard drawings for utility locations.

E. Unusual Piping and Plumbing. Special and unusual piping and plumbing for equipment or structures are treated as separate items and are not included in these standards. They shall be approved by the City Engineer or his/her designee.

F. Dead Ends. To provide increased reliability of service and reduce head loss, dead ends shall be minimized by making appropriate tie-ins whenever practical. Where dead-end mains occur, they shall be provided with a fire hyardant or with an approved flushing hydrant or blow-off for flushing purposes. See section 400.070 for flushing specifications.

G. Drains. No drain within the culinary water system or other such appurtenances to the distribution system can be connected to the sanitary sewer or storm drain system. Where drains cannot be drained to daylight, underground gravel-filled absorption pits may be used if the site is not subject to flooding and conditions will assure adequate drainage. Sump pumps may also be considered if a drain to daylight or absorption pit is not feasible.

H. Surface Water Crossings. Surface water crossings, whether over or under water, require Division of Drinking Water approval and shall conform to Utah Code R309-550-8 (8).

400.020. Installation.

A. General. Drinking water distribution and transmission systems shall be installed according to the Utah State-adopted plumbing code as well as the requirements and specifications of APWA 33 11 00, 33 05 05, 33 05 06, 33 05 07, AWWA M23; 2003, and AWWA M55; 2006. (Water Distribution and Transmission).

B. Pipe Cleanliness. All foreign matter or dirt shall be removed from the inside of the pipe before it is placed and it shall be kept clean during and after laying. No debris, tools, or other materials shall be placed in the pipe during laying operations. When laying of pipe is not in progress, the pipe shall be closed by a water-tight plug.

C. Identification Tape. All drinking water mains shall be installed with identification tape that meets the requirements and specifications of APWA 33 05 20 (Backfilling Trenches). Tape shall be buried 12 inches above the pipe.

D. Lateral Displacement. All pipes shall be protected from lateral displacement resulting from impact or unbalanced loading during backfilling operations.

E. Restraining. Either thrust blocks or mechanical restraining devices shall be used for all tees, valves, plugs, caps and bends. Restraining shall be accomplished according to the most recent APWA standards.

F. Connections to Existing Drinking Water Lines. The Contractor will be responsible to verify actual size, type of material and location of existing utilities in the field. The fittings and materials required for construction must be approved by the City Engineer or his/her designee.

Where fitting sizes, such as tees and crosses, are shown on the plans, those sizes will be used. However, no attempt has been made to show all needed fittings or materials.

Tapping tees may only be installed when authorized by the City Engineer or his/her designee and when the existing main is at least one size larger than the proposed intersecting line.

G. Bedding. A continuous and uniform bedding shall be provided in the trench for all buried pipe. Stones larger than 3/4" for plastic pipe or 2-inch minus for ductile iron pipe shall be removed for a depth of at least 6 inches below the bottom of the pipe. Bedding materials shall otherwise be installed per APWA standards

400.030. Pipe and Fittings.

A. Polyvinyl Chloride Pipe (PVC). PVC pipe shall meet the standards and specifications of APWA 33 05 07 (Polyvinyl Chloride Pipe), AWWA C900 and C905. Only blue or white, SDR-18 pressure class 150 psi PVC pipe may be used for drinking water mains.

B. Ductile Iron Pipe. Ductile iron pipe shall meet the standards and specifications of APWA 33 05 05 (Ductile Iron Pipe). Only a pressure class of 150 psi or larger may be used. A tubular black polyethylene encasement must be installed according to AWWA C105 over all ductile iron pipe and fittings. Flanges, when required, shall meet the requirements and specifications of AWWA C115.

C. Polyethylene Pipe. Polyethylene pipe shall meet the standards and specifications of APWA 33 05 06 (Polyethylene Pipe) and AWWA C906 which includes NSF-61 certification.

D. Steel Pipe - Lined and Coated. Steel pipe shall meet the standards and specifications of APWA 33 05 09 (Steel Pipe - Lined and Coated).

E. Copper Tubing. Copper tubing shall be "soft annealed" and shall conform to the standards for "Type K," prescribed in ANSI/AWWA C800-89 Section A.2 for "Copper Water Tubing" and to ASTM, designation B42 and B88-99, and current revisions thereof. It shall be free from grooving cracks, indentations, flaws or other defects. At intervals of not greater than one and one-half feet, the tubing shall bear clear, permanent markings indicating the type and manufacturer.

F. Fittings. Use Ductile Iron fittings that conform to the provisions of ANSI/AWWA C110/A21.10 or C153/A21.53 unless otherwise recommended by the manufacturer and authorized by the City Engineer or his/her designee. All PVC pipe being inserted into fittings shall have the bevel end removed. All the bolts and nuts of all fittings shall be greased. All fittings shall have an 8 mil vinyl wrap plastic cover.

Minimum pressure Class will be 250 for pipes larger than 12 inch diameter. Pipes of 12 inch diameter and smaller shall be pressure Class 350.

FLOW REQUIREMENTS FOR FLUSHING

Pipe Diameter	Flow in Gallons Per Minute
4 inch	100
6 inch	220
8 inch	390
10 inch	610
12 inch	880
16 inch	1,567
18 inch	1,980
20 inch	2,450
24 inch	3,525

30 inch	5,507

400.040. Valves and Couplings.

A. General. All valves shall meet the requirements of APWA 33 11 00 (Water Distribution and Transmission) and APWA 33 12 16 (Water Valves).

B. Resilient Seated Gate Valve. All valves on 4 inch to 12 inch drinking water mains shall be resilient seated gate valves. Valves shall also be of iron body have non-rising bronze stems and meet the following specifications:
   1. Mechanical Joint. When valves are Mechanical Joint, they shall be furnished with all necessary glands, followers, and bolts and nuts to complete installation.
   2. Valve Stems. Bronze valve stems shall be interchangeable with stems of the double disc valves of the same size, direction of opening and manufacture.

C. Butterfly Valve. All valves 14 inches and larger shall be butterfly valves which meet the requirements and specifications of APWA 33 11 00 (Water Distribution and Transmission) and APWA 33 12 16 (Water Valves) and the following specifications:
   1. General. Valve bodies shall be cast iron, ASTM A-126 Class B. Body ends shall be flanged with facing and drilling in accordance with ANSI B16.1, Class 125; or mechanical joint in accordance with AWWA C111. All mechanical joint end valves shall be furnished complete with joint accessories (bolts, nuts, gaskets, and glands). All valves shall conform to AWWA Standard C-504, Table 3, Laying Lengths for Flanged Valves and Minimum Body Shell Thickness for all Body Types.
   2. Disc. Valve disc shall be ductile iron ASTM A-536, grade 65-45-12. Valve disc shall be of the offset design providing 360 degree uninterrupted seating.
   3. Shaft Bearings. Shaft bearings shall be contained in the integral hubs of the valve body and shall be self-lubricated sleeve type.
   4. Coating. All valves shall be coated with epoxy in conformance to AWWA Standard C-550, latest revision. Interior wetted ferrous surfaces shall be coated a nominal 10 mils thick for long life; and body exterior shall have a minimum of 3 to 4 mils coating thickness in order to provide superior base for field-applied finish coats.

D. Valve Boxes. Valves shall be bolted to the cross in the intersection of streets as a cluster valve set. Earth fill shall be carefully tamped around the valve box to a distance of 4 feet on all sides of the box, or to the undisturbed trench face if less than 4 feet.

   All top of valve boxes located in streets shall be installed 1/4 inch below grade. When an overlay is required, the pavement surrounding the valve box shall be neatly cut to form a 30 inch round opening with the valve box centered, and a concrete collar shall be cast around the box 1/4 inch below grade and the valve box set 1/2 inch below grade. Valve boxes in off-road areas shall extend 6 inches above grade. Lid detail shall be similar to Comco C-6517.

E. Couplings. Couplings shall be equal to the product of Smith-Blair or Dresser with cast iron couplings being used on all cast iron and PVC pipe. Couplings shall be of the straight, transition, or reducing style as required by the specific installation. All steel fittings and bolts shall be coated with a non-oxide coating and wrapped with polyethylene.

F. Pressure Regulation Valves. Pressure regulation valves (PRV) which are required in a development when static pressures exceed 150 psi and shall be designed by the Developers engineer, the design shall be submitted to the City Engineer or his/her designee for review and approval prior to starting construction. All PRV's shall be Cla-Val with a 4" bypass or approved by the City Engineer, be placed in a concrete vault, have isolation valves on each side, and have telemetry included.

G. Tapping Valves. Tapping valves may only be used when approved by the City Engineer or his/her designee. Tapping saddles with an "O" ring may be used if the drinking water main line to be tapped is larger than the new drinking water main line. Where the tap is the same size as the existing main, cast iron or stainless steel tapping sleeves shall be used, which encase the full perimeter of the pipe. The valve shall be a tapping valve with a guide lip on the flanged side. The opposite side of the valve shall have a mechanical joint connection.

H. Air, Vacuum and Release Valves. Combination air, vacuum and release valves shall be installed according to the standard drawings at high points in the system as required by the City Engineer or his/her designee.

I. Isolation Valves. A sufficient number of valves shall be provided on water mains so that inconvenience and sanitary hazards will be minimized during repairs. Valves shall be located at every roadway intersection or block on all segments of pipe. Where a proposed system may serve widely scattered customers and where future development is not expected, the valve spacing shall not exceed two thousand (2,000) feet.

J. Backflow Devices. Installation of backflow devices shall conform to City ordinances and the State-adopted plumbing code. Alpine City has strict guidelines regarding cross connections. In the event a cross connection is allowed, a reduced pressure zone (RPZ) backflow device is the only allowed style of backflow prevention device. A RPZ may be required in other circumstances, each situation will be evaluated on an individual basis.

400.050. Fire Hydrants.

A. General. Fire hydrants shall meet the requirements and specifications of APWA 33 12 19 (Hydrants). All fire hydrants shall be Mueller Super Centurion 250 or approved equivalent and red in color. They shall have a 5 ¼ inch barrel diameter and 6 inch mechanical joint connection. The six inch gate valve will be mechanical joint by flange connected to the tee joint at the main line in the street. The valve box complete for 6 foot trench with lid that read “FIRE” with one 4 ½ inch streamer nozzle and two 2 ½ inch hose nozzles. Hydrants shall be frost proof. The threads shall be National Standard Fire Hose Thread. Spacing of fire hydrants shall be according to the Uniform Fire Code but more specifically, hydrants are required to be located within 250’ of any structure, typically located on property lines. The fire flow level of service Alpine City has established is 1,750 gpm for 2 hours at every hydrant, this will be verified when the proposed plan is submitted and reviewed by the City’s designated Hydraulic Engineer.

B. Placement and Location. Fire hydrant location to be approved by the City Engineer or his/her designee. Fire hydrants shall be set vertical and held in place by adequate concrete blocking which shall be left in the trench. Hydrants shall be set at a height that will allow approximately 2 inches exposed between the finished ground and the sidewalk flange. A gravel filled drip area shall be provided. Hydrant drains shall not be connected to or located within 10 feet of sanitary sewers. Where possible hydrant drain shall not be located within 10 feet of storm drains. See standard drawing for fire hydrants.

The relocation of fire hydrants shall meet the requirements and specifications of APWA 33 11 11 (Relocate Water Meters and Fire Hydrants) and related sections.

400.060. Meters and Services.

A. General. Alpine City owns and maintains the water system up to and including the water meter. Between the water meter and home is the responsibility of the homeowner. See Standard Drawings for drinking water services. The minimum size of new drinking water service lines is 1 inch, while the standard meter size is 3/4 -inch. All drinking water services shall have dual check valves. Drinking water services shall extend 20 feet beyond the back of curb and shall be capped until connected to a building. Meter and service line installation shall conform to the State-adopted plumbing code and conform to the standard meter installation detail as noted in the Alpine City Standard Details.

B. Placement and Location. All meter boxes shall have their location and grade staked prior to installation. No meter boxes shall be set in sidewalks or driveways. Service taps shall be a minimum of 36 inches apart. No taps will be allowed within 36 inches of the end of the pipe.

Service laterals shall extend perpendicular from the main to the meter box. If a meter must be coordination with the City Engineer is required. When a new service line is installed the old corporation stop shall be shut off at the main and the old service line cut two feet from the main.

Drinking water service lines shall meet the separation from sanitary sewer requirements in this Section. Drinking water services shall extend 20 feet beyond the back of curb and capped until connected to a building.

The relocations of drinking water meters shall meet the requirements and specifications of APWA 33 11 11 (Relocate Water Meters and Fire Hydrants) and related sections. Services 3/4 – 2 inch shall be copper tubing shall be "soft annealed" and shall conform to the standards for "Type K," prescribed in ANSI/AWWA C800-89 Section A.2 for "Copper Water Tubing" and to ASTM, designation B42 and B88-99, and current revisions thereof. Pipe damaged by scratches, cuts, kinks, or buckled areas shall not be installed. PVC, as mentioned in section 400.010 (B) shall be used in conjuction with PVC mains where corrosive soils exist and shall conform to the requirements and specifications of APWA 33 05 06 (Polyethylene Pipe), only CTS SDR9 200 psi blue polyethylene pipe shall be used for service lines. Deflection in joints shall meet

manufacturer's specifications and shall be approved by the City Engineer or his/her designee or shall be replaced with the proper fitting.

C. Meters. The standard meter size is 3/4-inch. All meters shall be paid for by the Contractor and supplied by the City. Meter boxes shall be in good repair. They shall not be set at an angle, crushed, or dented. The inside of boxes must be free from obstructions such as dirt, rocks or debris.

400.070. Flushing.

A. General. All drinking water lines shall be flushed after the high chlorine test and prior to the pressure test. See Section 250. Testing and Inspection for testing information. Flushing shall be accomplished through hydrants and at the end each line. No flushing device shall be directly connected to a sewer or storm drain.

B. Velocity. The Contractor shall install a tap sufficient in size to provide for 2½ foot per second flushing velocity in the line. The following is the flow quantity required to provide a 2½ foot per second flushing velocity.

FLOW REQUIREMENTS FOR FLUSHING

Pipe Diameter in Inches	Flow in Gallons per Minute
4 inch	100
6 inch	220
8 inch	390
10 inch	610
12 inch	880
16 inch	1,567
18 inch	1,980
20 inch	2,450
24 inch	3,525
30 inch	5,507

400.080. Disinfection of Drinking Water Lines.

A. Cleaning. The pipe shall be clean prior to disinfection. If in the opinion of the City, contamination is such that it cannot be removed by flushing, the pipe shall be cleaned by mechanical means and then swabbed with a 1% hypochlorite disinfection solution.

B. Methods. All drinking water pipeline shall be disinfected as outlined in AWWA C651 by one of the following methods:

1. *Tablet Method.* The tablet method shall consist of placing calcium hypochlorite tablets at the specified rate in the main during construction at the upstream end of each section of pipe. The tablet shall be attached with an adhesive, such as Permatex No. 1 or equivalent as approved by the City Engineer or his/her designee. The line shall then be filled slowly (velocities less than 1 ft/sec), expelling all air pockets and maintaining the disinfection solution in the line for at least 24 hours, 48 hours if the water temperature is less than 41º F. The disinfection solution shall have a concentration of at least 25 mg/l of available chlorine.
2. *Continuous Feed Method.* The continuous feed shall be done exactly as outlined in AWWA C651 and shall have a twenty-five mg/l available Chlorine after 24 hours.

Under both methods the Contractor shall not be allowed to flush the line until the chlorine residual test has been passed by the City. If necessary drinking water lines shall be re-chlorinated until satisfactory bacteriological testing is obtained. See Section 250. Testing and Inspection for testing information.

Section 450. Pressurized Irrigation.

SECTION INDEX

450.010. General.
A. Specifications.
B. Pipe.
C. Size.
D. Location.
E. Unusual Piping and Plumbing.

450.020. Installation.
A. General.
B. Pipe Cleanliness.
C. Minimum Cover.
D. Identification Tape.
E. Lateral Displacement.
F. Restraining.
G. Connections to Existing Pressurized Irrigation Lines.

450.030. Pipe and Fittings.
A. Polyvinyl Chloride Pipe (PVC).
B. Ductile Iron Pipe.
C. Polyethylene Pipe.
D. Steel Pipe - Lined and Coated.
E. Fittings.

450.040. Valves and Couplings.
A. General.
B. Resilient Seated Gate Valve.
C. Butterfly Valve.
D. Valve Boxes.
E. Couplings.
F. Pressure Regulation Valves.
G. Tapping Valves.
H. Air, Vacuum and Release Valves.

450.050. Meters, Boxes and Services.
A. General.
B. Placement and Location.
C. Meters and Boxes.
D. Polyethylene Pipe.

450.060. Flushing.
A. General.
B. Velocity.

450.010. General.

A. Specifications. These specifications cover the installation of pressurized irrigation lines. See Section 200 for improvement and design requirements, Section 250 for inspection and testing requirements, and Section 350 for earthwork and trench requirements. See standard drawings related to pressurized irrigation.

B. Pipe. Polyvinyl Chloride (PVC) pipe shall be used for all pressurized irrigation mains 12 inches in diameter and smaller unless otherwise authorized by the City Engineer or his/her designee. Ductile iron, PVC, or polyethylene pipe shall be used for pressurized irrigation mains larger than 12 inches in diameter as approved by the City Engineer or his/her designee. Only PVC or polyethylene pipe may be used in corrosive soils.

C. Size. The City Engineer or his/her designee must approve the sizes of all proposed pressurized irrigation lines. The minimum size of pressurized irrigation pipe in thru streets is 6 inch diameter for main lines, 4 inch diameter for cul-de-sacs unless otherwise specified in the Pressurized Irrigation System Master Plan. 1 inch diameter for services are required for each lot. A dual service shall be 1½" to the service tee.

D. Location. Pressurized irrigation mains shall be located on either the south or west sides of a street 3 feet from the edge of curb. See standard drawings for utility locations.

E. Unusual Piping and Plumbing. Special and unusual piping and plumbing for equipment or structures are treated as separate items and are not included in these standards.

Tapping tees may only be installed when authorized by the City Engineer or his/her designee and when the existing main is at least one size smaller than the proposed main.

450.020. Installation.

A. General. Pressurized irrigation distribution and transmission systems shall be installed according to the requirements and specifications of APWA 33 11 00 (Water Distribution and Transmission). PVC pipe shall also be installed according to the requirements and specifications of AWWA C605.

B. Pipe Cleanliness. All foreign matter or dirt shall be removed from the inside of the pipe before it is placed and it shall be kept clean during and after laying. No debris, tools, or other materials shall be placed in the pipe during laying operations. When laying of pipe is not in progress, the pipe shall be closed by a water-tight plug.

C. Minimum Cover. All pressurized irrigation mains shall have a minimum cover of 2 feet to the top of the pipe.

D. Identification Tape. All pressurized irrigation mains shall be installed with identification tape that meets the requirements and specifications of APWA 33 05 20 (Backfilling Trenches). Tape shall be buried 12 inches above the pipe.

E. Lateral Displacement. All pipes shall be protected from lateral displacement resulting from impact or unbalanced loading during backfilling operations.

F. Restraining. Either thrust blocks or mechanical restraining devices shall be used for all tees, valves, plugs, caps and bends. Restraining shall be accomplished according to the standard drawings.

G. Connections to Existing Pressurized Irrigation Lines. The Contractor will be responsible to verify actual size, type of material and location of existing utilities in the field. The fittings and materials required for construction must be approved by the City Engineer or his/her designee.

Where fitting sizes, such as tees and crosses, are shown on the plans, those sizes will be used. However, no attempt has been made to show all needed fittings or materials.

450.030. Pipe and Fittings.

A. Polyvinyl Chloride Pipe (PVC). PVC pipe shall meet the requirements and specifications of APWA 33 05 07 (Polyvinyl Chloride Pipe) and AWWA C900 and C905. Only purple, SDR-18 pressure class 150 psi pipe may be used for pressurized irrigation mains.

B. Ductile Iron Pipe. Ductile iron pipe shall meet the standards and specifications of APWA 33 05 05 (Ductile Iron Pipe). Only a pressure class of 150 psi or larger may be used. A tubular purple polyethylene encasement must be installed according to AWWA C105 over all ductile iron pipe and fittings. Flanges,

when required, shall meet the requirements and specifications of AWWA C115. Ductile iron may be directed tapped for the use of corporation stops.

C. Polyethylene Pipe. Polyethylene pipe shall meet the standards and specifications of APWA 33 05 06 (Polyethylene Pipe).

D. Steel Pipe - Lined and Coated. Steel pipe shall meet the standards and specifications of APWA 33 05 09 (Steel Pipe - Lined and Coated).

E. Fittings. Use Ductile Iron fittings that conform to the provisions of ANSI/AWWA C110/A21.10 or C153/A21.53 unless otherwise recommended by the manufacturer and authorized by the City Engineer or his/her designee. All PVC pipe being inserted into fittings shall have the bevel end removed. All the bolts and nuts of all fittings shall be greased. All fittings shall have an 8 mil vinyl wrap plastic cover.

450.040. Valves and Couplings.

A. General. All valves shall meet the requirements of APWA 33 11 00 (Water Distribution and Transmission) and APWA 33 12 16 (Water Valves).

B. Resilient Seated Gate Valve. All valves on 4 inch to 12 inch water mains shall be resilient seated gate valves. Valves shall also be of iron body have non-rising bronze stems and meet the following specifications:

1. *Mechanical Joint.* When valves are Mechanical Joint, they shall be furnished with all necessary glands, followers, and bolts and nuts to complete installation.
2. *Valve Stems.* Bronze valve stems shall be interchangeable with stems of the double disc valves of the same size, direction of opening and manufacture.

C. Butterfly Valve. All valves 14 inches and larger shall be butterfly valves which meet the requirements and specifications of APWA 33 11 00 (Water Distribution and Transmission) and APWA 33 12 16 (Water Valves) and the following specifications:

1. *General.* Valve bodies shall be cast iron, ASTM A-126 Class B. Body ends shall be flanged with facing and drilling in accordance with ANSI B16.1, Class 125; or mechanical joint in accordance with AWWA C111. All mechanical joint end valves shall be furnished complete with joint accessories (bolts, nuts, gaskets, and glands). All valves shall conform to AWWA Standard C-504, Table 3, Laying Lengths for Flanged Valves and Minimum Body Shell Thickness for all Body Types.
2. *Disc.* Valve disc shall be ductile iron ASTM A-536, grade 65-45-12. Valve disc shall be of the offset design providing 360 degree uninterrupted seating.
3. *Shaft Bearings.* Shaft bearings shall be contained in the integral hubs of the valve body and shall be self-lubricated sleeve type.
4. *Coating.* All valves shall be coated with epoxy in conformance to AWWA Standard C-550, latest revision. Interior wetted ferrous surfaces shall be coated a nominal 10 mils thick for long life; and body exterior shall have a minimum of 3 to 4 mils coating thickness in order to provide superior base for field-applied finish coats.

D. Valve Boxes. All buried valves shall be installed complete with two-piece, cast iron, slip type, 5-1/4-inch shaft valve box with drop lid. The lid shall have the word "IRRIGATION" or “DRAIN” according to the standard drawing cast in the metal.

Valves and valve boxes shall be installed where shown on the drawings. Valves and valve boxes shall be set plumb. Valve boxes shall be centered directly over the valve. Valves shall be aligned with property lines where possible. Earth fill shall be carefully tamped around the valve box to a distance of 4 feet on all sides of the box, or to the undisturbed trench face if less than 4 feet. Valves shall have the interiors cleaned of all foreign matter before installation.

All top of valve boxes located in streets shall be installed 1/4 inch below grade. The pavement surrounding the valve box shall be neatly cut to form a 30 inch round opening with the valve box centered, and a concrete collar shall be cast around the box. Valve boxes in off-road areas shall extend 6 inches above grade unless otherwise specified by the City Engineer or his/her desginee. Lid detail shall be similar to Comco C-6517.

E. Couplings. Couplings shall be equal to the product of Smith-Blair or Dresser with cast iron couplings being used on all cast iron and PVC pipe. Couplings shall be of the straight, transition, or reducing style as

required by the specific installation. All steel fittings and bolts shall be coated with a non-oxide coating and wrapped with polyethylene.

F. Pressure Regulation Valves. Pressure regulation valves (PRV) which are required in a development shall be designed by the Developers engineer and the design shall be submitted to the City Engineer or his/her designee for review and approval prior to starting construction. All PRV's shall be Cla-Val with a 4" bypass or as specified by design, be placed in a concrete vault and have telemetry included.

G. Tapping Valves. Tapping valves may only be used when approved by the City Engineer or his/her designee. Tapping saddles with an "O" ring may be used if the water main line to be tapped is larger than the new water main line. Where the tap is the same size as the existing main, cast iron or stainless steel tapping sleeves shall be used, which encase the full perimeter of the pipe. The valve shall be a tapping valve with a guide lip on the flanged side. The opposite side of the valve shall have a mechanical joint connection.

H. Air, Vacuum and Release Valves. Combination air, vacuum and release valves shall be installed according to the standard drawings at high points in the system as required by the City.

450.050. Meters, Boxes and Services.

A. General. See the standard drawings for pressurized irrigation services. The minimum size of new pressurized irrigation service lines is 1 inch for single service and 1 ½" for dual service.

B. Placement and Location. All meters and boxes shall have their location and grade staked prior to installation. No meters or boxes shall be set in sidewalks or driveways. Meters and boxes are to be set 5 feet uphill from the water meter, 1 foot behind the sidewalk or 10 feet behind the curb. Service taps shall be a minimum of 36 inches apart. No taps will be allowed within 36 inches of the end of the pipe.

Service laterals shall extend perpendicular from the main to the meter or box. For dual pressurized irrigation services, laterals shall extend perpendicular from the main to the tee.

If a meter must be moved coordination with the City Engineer is required. When a new service line is installed the old corporation stop shall be shut off at the main and the old service line cut two feet from the main.

C. Meters and Boxes. All meters shall be paid for by the developer and ordered by the City. Meter boxes and pressurized irrigation boxes shall be in good repair. They shall not be set at an angle, crushed, or dented. The inside of boxes must be free from obstructions such as dirt, rocks or debris. Meters shall be installed by the Developer or Contractor.

D. Polyethylene Pipe. Only CTS SDR9 200 psi purple polyethylene pipe shall be used for pressurized irrigation service lines. Pipe damaged by scratches, cuts, kinks or buckled areas shall not be installed.

The bottom of trench shall be flat with no hollows, no lumps and no rock. If these conditions do not occur pipe must be bedded in coarse sand. No rocks shall be allowed within six inches of pipe.

Pipe shall be cut with either a wheel or scissor type tubing cutter with a blade specifically designed for plastic. Cuts shall be square and clean. Cutter manufacturer instructions shall be followed when cutting pipe. All connections shall have stainless steel stiffeners.

There shall be no unnecessary bending of pipe. Taps shall be exactly horizontal to the pressurized irrigation main. If bending cannot be avoided maximum bending radius shall be 25 times the pipe diameter as measured in inches (i.e.: a 16 inch pipe cannot bend on a curvature having a radius less than 16 x 25= 400 feet). There shall be no bending within 3 feet of a fixed point and no "S" shape curves.

450.060. Flushing.

A. General. All pressurized irrigation lines shall be flushed before placed in service. Flushing shall be accomplished through the end of each line.

B. Velocity. The Contractor shall install a tap sufficient in size to provide for 2 ½ feet per second flushing velocity in the line. The following is the flow quantity required to provide a 2 ½ foot per second flushing velocity.

FLOW REQUIREMENTS FOR FLUSHING

Pipe Diameter	Flow in Gallons Per Minute
4 inch	100
6 inch	220
8 inch	390
10 inch	610
12 inch	880
16 inch	1,567
18 inch	1,980
20 inch	2,450
24 inch	3,525
30 inch	5,507

Section 500. Sanitary Sewer.

SECTION INDEX

500.010. General.
- A. Specifications.
- B. Pipe.
- C. Size.
- D. Locations.
- E. Minimum Slopes.
- F. Sanitary Sewer Lift Stations.
- G. Unusual Piping and Plumbing.

500.020. Pipe and Fittings.
- A. General.
- B. Polyvinyl Chloride Pipe (PVC).
- C. ADS Sanitite HP Pipe.

500.030. Services.
- A. General.
- B. Clean-outs.

500.010. General.

A. Specifications. Sanitary sewer facilities shall meet the requirements and specifications of APWA 33 31 00 (Sanitary Sewerage Systems). These specifications cover the installation of sanitary sewer lines. See Section 200 for improvement and design requirements, Section 250 for inspection and testing requirements, and Section 350 for earthwork and trench requirements. See standard drawings related to sanitary sewers.

B. Pipe. All sanitary sewer pipe 18 inches in diameter and larger shall be ADS Sanitite HP pipe or approved equivalent unless otherwise approved by City Engineer or his/her designee. All other sanitary sewer pipe shall be constructed with polyvinyl chloride (PVC) pipe.

C. Size. The City Engineer or his/her designee must approve the sizes of all proposed sanitary sewer lines. Minimum size of pipe is 8 inch diameter for main lines and 4 inch diameter for services.

D. Location. Sanitary Sewer mains shall be located on either the south or west sides of a street 7 feet from the centerline. A maximum of 400 feet of pipe shall be allowed between manholes unless otherwise approved by the City Engineer.

E. Minimum Slopes. Slopes shall be designed to have a 2 foot per second velocity unless otherwise approved by the City Engineer. The following table lists minimum slopes for sanitary sewer for each size of pipe:

MINIMUM SANITARY SEWER SLOPES

Pipe Diameter (inches)	Minimum Slope (%)
4	2.000
6	1.000
8	0.334
10	0.248
12	0.194
14	0.158
15	0.144
16	0.132
18	0.113
21	0.092
24	0.077
27	0.066
30	0.057
36	0.045
48	0.031
54	0.027
60	0.023

F. Sanitary Sewer Lift Stations. Sanitary sewer lifts stations require prior approval. All possible options for a gravity flow system shall be considered prior to requesting approval of a sanitary sewer lift station or equivalent system. Sanitary sewer lift stations or equivalent systems which are approved to be used in a development shall be designed by the Developer's engineer; the design shall be submitted to the City Engineer or his/her designee for review prior to Preliminary Approval of the development. Lift stations will be the wet well / dry well type, will have standby power, proper ventilation, telemetry, and will be designed for large areas, not individual subdivisions.

G. Unusual Piping and Plumbing. Special and unusual piping and plumbing for equipment or structures are treated as separate items and are not included in these standards.

500.020. Pipe and Fittings.

A. General. ADS Sanitite HP pipe or approved equivalent shall be used for all sanitary sewer lines larger than 18 inches in diameter. All other sanitary sewer lines shall be constructed with polyvinyl chloride (PVC) pipe.

Pipe buried more than 12 feet deep shall require manufacturing and engineering specifications to be submitted to the City Engineer or his/her designee for written approval.

B. Polyvinyl Chloride Pipe (PVC). PVC pipe shall meet the requirements and specifications of APWA 33 05 07 (Polyvinyl Chloride Pipe) and shall have a minimum rating of SDR-35.

C. ADS Sanitite HP Pipe. Sanitite HP pipe with sizes up to 30 inches shall meet the requirements and specifications of ASTM F2732. Sanitite HP pipe with sizes over 30 inches shall meet the requirements of ASTM F2764.

500.030. Services.

A. General. All sanitary sewer services shall be connected to existing sanitary sewer mains by use of an Inline Y or approved equivalent Insert-a-Tee type connection, and shall be approved by the City Engineer. Sewer services shall extend 10 feet beyond the back of sidewalk and plugged until connected to a building. The minimum cover of sewer laterals is at 3' 6" at the property line.

B. Clean-outs. Clean-outs, per City details, shall be installed every 100 feet on all service lines.

Section 550 Storm, Land and Groundwater Drains.

SECTION INDEX

550.010. General.
- A. Specifications.
- B. Size.
- C. Location.
- D. Minimum Slopes.
- E. Unusual Piping and Plumbing.
- F. Groundwater Drains.

550.020. Pipe and Fittings.
- A. General.
- B. Concrete Pipe.
- C. Polyethylene Pipe.
- D. Polyvinyl Chloride Pipe.
- E. Corrugated Metal Pipe.

550.030. Sumps and Appurtenances.
- A. Connecting to Existing Drains Lines.
- B. Sumps.
- C. Inlet and Clean Out Structures.
- D. Headwalls.

550.040. Retention/Detention Basins.
- A. General.
- B. Retention Basins.
- C. Detention Basins.

550.050. Low Impact Development.
- A. General.

550.010. General.

A. Specifications. Storm, land and groundwater drain facilities shall meet the requirements and specifications of APWA 33 41 00 (Storm Drainage Systems). These specifications cover the installation of storm, land and groundwater lines. See Section 200 for improvement and design requirements, Section 250 for inspection and testing requirements, and Section 350 for earthwork and trench requirements. See standard drawings related to storm, land and groundwater drains. Land and groundwater drains shall be approved by the City Engineer and shall be installed lower in elevation than the sewer mainline.

B. Size. The City Engineer or his/her designee must approve the sizes of all proposed drain lines. The minimum size of pipe is 15" diameter for all lines, both mains and laterals.

C. Location. Drain lines shall be located along the centerline of the street, typically below water mains to reduce conflicts. Unless approved otherwise, a maximum of 400 feet of pipe shall be allowed between manholes.

D. Minimum Slopes. Slopes shall be designed to have a 2 foot per second velocity unless otherwise approved by the City Engineer. The following table lists minimum slopes for drain lines for each size of pipe:

MINIMUM DRAIN LINE SLOPES

Pipe Diameter (inches)	Minimum Slope (%)
12	0.194
14	0.158
15	0.144
16	0.132
18	0.113
21	0.092
24	0.077
27	0.066
30	0.057
36	0.045
48	0.031
54	0.027
60	0.023

E. Unusual Piping and Plumbing. Special and unusual piping and plumbing for equipment or structures are treated as separate items and are not included in these standards.

F. Groundwater Drains. All plans for groundwater drains must be designed and stamped by a licensed professional civil engineer in the State of Utah. Only rigid pipe may be used.

550.020. Pipe and Fittings.

A. General. Reinforced concrete pipe shall be used for all lines with less than 2 feet of cover or more than 8 feet of cover. Corrugated metal pipe (CMP) may only be used when authorized by the City Engineer or his/her designee.

B. Concrete Pipe. Concrete pipe shall meet the requirements and specifications of APWA 33 05 02 (Concrete Pipe and Culvert). Reinforced concrete pipe (RCP) shall be Class III. Only new pipe may be used unless otherwise authorized by the City Engineer or his/her designee.

C. Polyethylene Pipe. Polyethylene pipe shall meet the requirements and specifications of APWA 33 05 06 (Polyethylene Pipe) Type S for storm drains and Type SP for land or groundwater drains.

D. Polyvinyl Chloride Pipe (PVC). PVC pipe shall meet the requirements and specifications of APWA 33 05 07 (Polyvinyl Chloride Pipe).

E. Corrugated Metal Pipe (CMP). CMP shall meet the requirements and specifications of APWA 33 05 04 (Corrugated Metal Pipe).

550.030. Sumps, and Appurtenances.

A. Connecting to Existing Drain Lines. Manholes and sumps used to connect proposed storm drain to existing storm drain shall be plumb and centered on the existing storm drain. The new pipe shall be placed against the existing pipe at the elevation designated by the project engineer and the base poured as specified above. Care shall be taken not to disturb the alignment of the existing storm drain during the excavation procedure. Any damage to the existing storm drain shall be repaired.

B. Sumps. Sumps may only be constructed of reinforced concrete, precast sections and shall meet the requirements of ASTM C478-73. Sumps shall have eccentric lids to ensure adjustments in alignment.

C. Inlet and Clean Out Structures. Surface water must enter the City storm drain system through standard City inlet boxes. In no case may water inlet directly into storm manholes, clean-outs, or sumps. Inlets and clean out structures shall not exceed 400 ft spacing unless approved otherwise by the City Engineer.

All inlet and clean out structures shall be reinforced concrete boxes. They may be precast or cast-in-place. Grate and Frame Material. All castings shall be of ASTM A-48, Class 35 iron free from blowholes and shrinkage defects. Castings shall be free from fins and burrs and shall be shot-blasted to remove sand and other foreign matter. Freedom from cracks and defects shall be ascertained by the engineer prior to installation.

D. Headwalls. A headwall shall be installed at all ditch to pipe transitions. Headwall designs must be stamped by a licensed professional civil engineer in the State of Utah and approved by the City Engineer or his/her designee.

550.040. Retention/Detention Basins.

A. General. Basin designs shall be designed with the following side slopes:

Basin Finish	Min. Side Slope
Non-landscaped	3:1
Landscaped	4:1

B. Retention Basins. All retention basins shall have a freeboard of 12 inches. Design of retention basins shall be according to the Storm Water Drainage Design Manual. All retention basins shall have a series of interconnected sumps connected to curb inlet boxes or storm drain main lines.

All retention basins shall be constructed for drainage areas designated in the Storm Drain Master Plan. Basins for smaller areas may be allowed only with prior written approval of the City Engineer or his/her designee.

C. Detention Basins. All detention basins shall have 12 inches of freeboard. Design of detention basins shall be according to the Storm Water Drainage Design Manual. Detention basins may be constructed in landscape or parking areas. Each detention basin shall incorporate LID storm drain principles and have an overflow to the City storm drain system.

550.050. Low Impact Development.

General. All new development and roadways shall incorporate LID storm drain in the form of bioretention swales, underground retention cells and other methods as approved by the City Engineer or his/her designee. LID systems shall be designed in accordance with the Stormwater Design Manual.

Section 600. Streets and Pavements.

SECTION INDEX

600.010. General.
A. Street Designations.
B. Time Limitation after Curb and Gutter.
C. Geotextiles, Geogrids and Geocomposites.
D. Pavers.
E. Painted Traffic Lines and Markings.
F. Traffic Barriers.
G. Vehicle Delineators.

600.020. Street Section.
A. Soils Investigation.
B. Pavement Section.
C. Road-base Section.
D. Sub-base Section.
E. Grading.

600.030. Trail Section.
A. General.
B. Survey.
C. Weed Abatement.
D. Geotextile Fence.
E. Sub-grade.
F. Weed Barrier.
G. Limestone Crusher Fines.
H. Trail Markings.
I. Clean-up.

600.040. Bituminous Surface Course.
A. Paving Asphalts.
B. Asphalt Concrete.
C. Prime Coat.
D. Tack Coat.
E. Overlays and Patches.
F. Slurry Seal.
G. Chip Seal.
H. Micro-Surfacing.
I. Pavement Crack Seal.
J. High Density Mineral Bond Seal

600.010. General.

A. Street Designations. Street designations include: local streets, secondary access, collector streets and arterial streets. Designations shall be assigned by the City in compliance with the Alpine City Transportation Master Plan.

B. Time Limitation after Curb and Gutter is Placed. Pavement shall be placed at least 7 days after and before 45 days after the placement of curb and gutter unless an extension is granted by the City Engineer or his/her designee.

C. Geotextiles, Geogrids and Geocomposites. All geotextile work shall meet the requirements and specifications of APWA 31 05 19 (Geotextiles) and APWA 32 12 16 (Plant-Mix Asphalt Paving). Geogrid and geocomposite work shall meet the requirements and specifications of APWA 31 05 21 (Geogrids/Geoomposites) and APWA 32 12 16 (Plant-Mix Asphalt Paving).

D. Pavers. Pavers and installation shall meet the requirements and specifications of APWA 32 14 13 (Precast Concrete Unit Paving) and APWA 32 14 16 (Brick Unit Paving).

E. Painted Traffic Lines and Markings. Painted traffic lines and markings shall meet the requirements and specifications of APWA 32 17 23 (Pavement Markings) and the MUTCD.

F. Traffic Barriers. Vehicle barriers shall meet the requirements and specifications of APWA 34 71 13 (Vehicle Barriers) and the MUTCD.

G. Vehicle Delineators. Vehicle delineators shall meet the requirements and specifications of APWA 34 71 19 (Vehicle Delineators) and the MUTCD.

600.020. Street Section.

A. Soils Investigation. A soils investigation shall be performed for all new roads and those roads for which work will be performed. The results of this investigation and a design of the road cross section shall be submitted to and accepted by the City Engineer or his/her designee.

The following guidelines shall be used as a minimum requirement for street cross sections. They should be used unless the soils investigation indicates they are not adequate. Any variations from these standards must be approved by the City Engineer or his/her designee.

B. Pavement Section. All roads shall be paved with asphalt concrete according to City standards unless authorized by the City Engineer or his/her designee. The following table shall be used for minimum asphalt pavement surfacing depths:

ASPHALT PAVEMENT COURSE THICKNESS

Application	Minimum Pavement
Parking Lots and Driveways	3 inch
Local Streets	3 inch + preservation coat after 1 year
Secondary Access Roads	3 inch + preservation coat after 1 year (if pavement is required)
Collector/Arterial Streets	4 inch + preservation coat after 1 year

Streets shall have an approved preservation coat installed 1 year after the end of construction inspection, pending amenable conditions for installation. At the City's discretion, the contractor may arrange to have the City install the preservation coat at the Contractor's expense. The funds for a preservation coat shall be provided in escrow prior to recording the subdivision plat.

C. Road-base Section. All roads shall have a minimum 8 inches of road-base under the pavement section. Road-base shall be an untreated base course installed according to City standards. See Section 350. Earthwork and Trenching. Road-base shall be finished to a smooth uniform line and grade and shall extend a minimum of 12" beyond the pavement surface for placements without curb and gutter. For placements with curb and gutter it shall extend 12" beyond the back of curb.

D. Sub-base Section. All sub-base shall be an engineered fill that meets and is installed according to City standards. See Section 350. Earthwork and Trenching. Sub-base shall be finished to a smooth uniform line and grade and shall extend a minimum of 12" beyond the pavement surface for placements without curb and gutter. For placements with curb and gutter it shall extend 12" beyond the back of curb. The thicker section shall be used in the case where CBR may be in conflict. The following table shall be used for minimum sub-base course thicknesses for the following California Bearing Ratio (CBR) values of sub-grade:

PARKING LOTS AND DRIVEWAYS
MINIMUM SUB-BASE COURSE THICKNESSES

Sub-grade CBR	Minimum Sub-base Thickness (inches)
Less than 2	12
2.1 to 8.0	8
More than 8	No Sub-base Required

LOCAL STREET / SECONDARY ACCESS
MINIMUM SUB-BASE COURSE THICKNESS

Sub-grade CBR	Minimum Sub-base Thickness (inches)
Less than 2	15
2.1 to 3.0	12
3.1 to 10.0	8
More than 10	No Sub-base Required

COLLECTOR / ARTERIAL STREET
MINIMUM SUB- BASE COURSE THICKNESS

Sub-grade CBR	Minimum Sub-base Thickness (inches)
Less than 2.0	18
2.1 to 3.0	15
3.1 to 5.0	12
5.1 to 15.0	8
More than 15	No Sub-base Required

E. Grading. The sub-grade, sub-base, and road base shall all be graded to an engineered red-head and accepted by the City. Red-heads shall be placed every 50 feet at the crown of the road. If the distance between red-heads and edge of pavement exceeds 25 feet additional redheads shall be installed halfway between the crown and edge of pavement.

600.030. Trail Section.

A. General. A pavement and soils investigation shall be performed for Class A and B trails. The results of this investigation and a design of the trail section shall be submitted to and accepted by the City Engineer or his/her designee.

The following guidelines shall be used as a minimum requirement for Class A thru D trail cross sections. They should be used unless the soils investigation indicates they are not adequate. Any variations from these standards must be approved by the City Engineer or his/her designee. All trail materials shall be placed according to City standards.

1. *Engineered Fill.* Compacted engineered fill shall be placed in all areas where fills are required to meet grade or the requirements of the soils investigation.
2. *Untreated Base Course.* 6 inches of compacted untreated base course shall be placed under the surface course of Class A thru D trails.
3. *Bituminous Surface Course.* A minimum of 2 inches of APWA DM-1/2, PG 58-28, 50 Blow or SP-3/8, PG58-28, 75Nd bituminous surface course shall be placed across 8 feet of the trail section.

a. A maximum of 15% RAP or 15% Recycled Binder Replacement, whichever is less, will be allowed.

B. Survey. Both sides of a trail shall be laid out by a survey and approved by the City before construction. Lath shall be placed at 100 foot intervals and at bends and obstacles the trail comes near.

C. Weed Abatement. All weeds shall be sprayed and killed with Roundup or an approved equivalent one week before any work may be performed, and within 3 weeks of the placement of untreated base course.

D. Geotextile Fence. An APWA 31 05 19 (Geotextiles) silt fence shall be installed along the limits of the trail construction at hillsides, river embankments, or by or through City Open Space.

E. Sub-grade. The sub-grade shall be grubbed of all trees, bushes and other organic matter. Sub-grade shall be graded to meet the following ADA requirements for walkways when required on ADA accessible pathways:
   1. *Maximum Slope.* Sub-grade shall not have a slope greater than 8.33%.
   2. *Maximum Run for Steep Slopes.* For slopes between 5.00% and 6.25% the maximum run shall be 40 feet. For slopes between 6.25% and 8.33% the maximum run shall be 30 feet.

F. Weed Barrier. Weed barrier geotextile shall meet the requirements and specifications of APWA 31 05 19 (Geotextiles).

G. Trail Markings. Trail lanes shall be delineated by a center single dashed yellow line. Painted traffic lines and markings shall meet the requirements and specifications of APWA 32 17 23 (Pavement Markings) and the MUTCD.

H. Clean-up. Upon completion of the trail section all windrows, survey and construction debris shall be removed from along the edges of the trail.

600.040. Bituminous Surface Course.

A. Paving Asphalts. Paving asphalts shall meet the requirements and specifications of APWA 32 12 03 (Paving Asphalts). Recycled Asphalt Pavement (RAP) or Recycled Asphalt Binder (RAB) content may not exceed 15% in any mix design.

For all new construction, paving shall not occur until gas, power, and dry utility crossings are installed and approved by the City Engineer or his/her designee. Crossings shall be surveyed and included on the asbuilt drawings.

For all streets, parking lots, trails, and repairs; use 1/2” 50 Blow PG 58-28 mix design.

For paving limitations, see Asphalt Paving Limitations, Section 250.

B. Asphalt Concrete. Asphalt concrete shall meet the specifications and requirements of APWA 32 12 05 (Asphalt Concrete), APWA 32 12 16 (Plant-Mix Asphalt Paving) and APWA 32 12 17 (Cold-Mix Asphalt Paving).

Cold-mix asphalt concrete shall only be installed when allowed by the City Engineer or his/her designee. All cold-mix asphalt concrete shall be replaced with hot-mix within 30 days of when it becomes available.

C. Prime Coat. Prime coat only as required by the plans or the City. Prime coat shall meet the requirements and specifications of APWA 32 12 13 (Prime Coat).

D. Tack Coat. Install tack coat as required and according to APWA 32 12 14 (Tack Coat). Use CSS-1 or CSS-1h tack emulsion diluted 2:1 (concentrate to water).

E. Thin Overlays and Patches. Use binder and bitminuous concrete as defined in Article A based on paver or hand applications. Apply tack coat to all horizontal and vertical surfaces sufficient to achieve minimum 95% coverage prior to placement of overlay or patch.

F. Slurry Seal. Slurry seals shall meet the requirements and specifications of APWA 32 01 13 (Slurry Seal). The type of slurry seal applied to a City street shall be approved and specified by the City Engineer.

G. Chip Seal. Chip seals shall meet the requirements and specifications of APWA 32 01 13 (Chip Seal).

H. Micro-Surfacing. Micro-surfacing shall meet the requirements and specifications of APWA 32 01 15 (Micro-Surface Seal).

I. Pavement Crack Seal. Pavement crack seals shall meet the requirements and specifications of APWA 32 01 17 (Pavement Crack Seal).

J. High Density Mineral Bond Seal. High densit mineral bond seals shall meet the requirements and specifications of APWA 32 01 13 (High Density Mineral Bond Seal).

Section 650. Portland Cement Concrete and Masonry Work.

SECTION INDEX

650.010. General.
- A. Specifications.
- B. Allowable Grades.
- C. American Disabilities Act (ADA) Requirements.
- D. Combination Curb, Gutter, and Sidewalk.
- E. Cold Weather Concrete.
- F. Debris in Gutters.
- G. Sidewalk.
- H. Drive Approaches.
- I. Protection of Wet Concrete.
- J. Repair.

650.020. Installation.
- A. Cutting Pavement.
- B. Forms and Joints.
- C. Base Material.
- D. Mixing and Conveying.
- E. Finishing.
- F. Curing.

650.030. Materials.
- A. Coarse Aggregate.
- B. Fine Aggregate.
- C. Cement.
- D. Water.

650.040. Concrete Mixes.
- A. Mix Design.
- B. Proportioning.
- C. Control.
- D. Water Adjustments.

650.050. Masonry.
- A. General.

650.010. General.

A. Specifications. These specifications cover the installation of concrete work including but not limited to curbs, gutters, sidewalks, boxes, and thrust blocks. All concrete work shall meet the requirements and specifications of APWA Division 03 Concrete and related sections. Concrete driveway, sidewalk, curb and gutter work shall meet the requirements and specifications of APWA 32 16 13 (Driveway, Sidewalk, Curb, Gutter). See Section 200 for improvement and design requirements, Section 250 for inspection and testing requirements, and Section 350 for earthwork and trench requirements. Also, see standard drawings related to concrete work.

All concrete work shall be constructed where indicated on the plans or as directed by the project engineer and shall conform in all respects to the specified lines, grades, and dimensions and City standards.

B. Allowable Grades. The minimum grade allowed for any gutter is 0.50%. See Alpine City Development Code for maximum allowable grades of City streets.

C. American Disabilities Act (ADA) Requirements. All pedestrian facilities will conform to the current federal ADA standards.

D. Combination Curb, Gutter, and Sidewalk. Combination curb, gutter, and sidewalk will not be allowed unless authorized by the City Engineer or his/her designee.

E. Cold Weather Concrete. Concrete shall not be placed when a descending air temperature in the shade and away from artificial heat falls below 35ºF. Concrete shall not be poured on frozen ground. Where temperatures are projected to descend below 32ºF within 72 hours after placement, concrete shall be covered or otherwise protected against freezing. No calcium based add mixtures may be used. Any other add mixtures must be approved by the City Engineer or his/her designee.

If concrete is not protected by insulation blankets for 72 hours following installation and the temperature drops below 45 degrees a pay factor of 0.50 shall apply.

Per APWA Division 03, concrete placed between October 1 and March 1 requires an increase in mix design strength by 1 class, i.e. Class 3000 becomes Class 4000, Class 4000 becomes Class 5000, etc.

F. Debris in Gutters. Once curb and gutter and surface course is in place they shall be kept as clean as possible. Dirt and gravel shall not be placed in gutter or on street. Gutter shall flow freely at all times.

G. Sidewalk. Sidewalk shall be 5 inches thick with 6 inches of compacted road base. To protect the structural integrity of new sidewalk, all dry utilities shall be installed prior to installing sidewalk. When equipment is required to cross over sidewalk, bridging must be provided to protect concrete.

H. Drive Approaches. All City owned drive approaches shall be 5 inches thick with 6 inches of compacted road base. Commercially owned drive approaches are recommended to be 6 inches thick.

I. Protection of Wet Concrete. The Contractor shall be responsible to protect wet concrete. Any concrete that is vandalized before setting up shall be replaced at the contractor's expense.

J. Repair. When authorized by the City Engineer or his/her designee, Contractor may repair concrete damage with Concrete Solution's Ultra Surface Concrete Polymer installed to manufacturer's specifications or an equivalent that is approved by the City Engineer or his/her designee.

650.020. Installation.

A. Cutting Pavement. When replacing gutter, the pavement shall be cut along the entire excavation to provide a vertical joint in the surface. Cut shall be a minimum of 12 inches from lip of gutter. A pavement saw shall be used for all pavement cutting. If excavation damages the cut pavement, pavement shall be cut again before patching. All road cuts shall be repaired within 2 working days.

B. Forms and Joints. When pouring concrete along a curve, flexible forms with enough stakes to hold the forms at an even curve shall be used.

Curb and gutter contraction joints shall be constructed every 10 feet by using steel templates 1/8 inch in thickness. Sidewalk contraction joints shall meet APWA requirements with the minimum distance between joints being 5 feet.

C. Base Material. A minimum of 6 inches of untreated base course shall be installed under all concrete and shall extend out 1 foot in all directions from concrete unless otherwise specified. Untreated base course shall be compacted and installed according to City standards. See Section 350. Earthwork and Trenches.

D. Mixing and Conveying. Concrete transported in a truck mixer, agitator, or other transportation device shall be discharged at the job and placed in its final position in the forms within 1 hour after the introduction of the mixing water to the cement and the aggregate, or the cement to the aggregate, except that in hot weather or under other conditions contributing to quick stiffening of the concrete, the maximum allowable time may be reduced by the City Engineer or his/her designee. The maximum volume of mixed concrete transported in an agitator shall be in accordance with the specified rating. During adverse weather conditions the City Engineer or his/her designee may deem it necessary for the use of a concrete pump truck.

E. Finishing. As soon as the concrete has set sufficiently to retain its shape without support of the face form, the clamps, spreaders and face forms shall be removed. While the concrete is still green, the surface shall be thoroughly floated with a magnesium or moist wooden float to provide an even smooth surface, then broomed lightly.

F. Curing. As soon as possible after final finishing, the finished surface shall be coated with a curing compound. The compound shall be an ASTM C-1315 Type 2 curing compound that meets the APWA 03 39 00 (Concrete Curing) specifications. The compound shall be applied in accordance with the manufacturer's recommendations. During the months of October through February exposed concrete shall be covered with an insulated curing blanket that meets the ACI 306 specification for 3 days when temperatures remain at 15 degrees Fahrenheit or higher and for 7 days for temperatures below 15 degrees Fahrenheit. Insulated curing blankets shall only be removed during the warmest parts of the day. The curing compound shall then be applied within 24 hours of the blankets being removed.

650.030. Materials.

A. Coarse Aggregate. A coarse aggregate shall consist of hard durable particles of a mixture of crushed and natural gravel possessing at least 50% of broken surface area. The coarse aggregate shall be free from substances which are chemically active relative to hydrated cement and shall be subject to particularly the following:

1. Loss on abrasion by Los Angeles Abrasion Test not more than 40% by weight.
2. Loss on exposure to 5 cycles of sodium sulfate soundness test, not more than 8% by weight.
3. Deleterious substances shall not exceed the values in the following table:

PORTLAND CEMENT CONCRETE
COURSE AGGREGATE DELETERIOUS SUBSTANCES

Substance	**Maximum % by Weight**
Soft Fragments	3.0
Coal Lumps	1.0
Clay Lumps	0.5
Material passing 39 100 Sieve	1.5
Organic Material	0.1
Total for All of the Above	3.0

The maximum size of aggregate to be used shall not exceed 1 1/2 inches in terms of this size definition contained in ASTM Standards except that the maximum size shall not exceed 1/4 of the least dimension of the finished concrete in which the aggregate is to be used.

Coarse aggregate shall be uniformly graded within the following range:

PORTLAND CEMENT CONCRETE
COARSE AGGREGATE GRADATION

Sieve Size	Minimum Retained (%)	Maximum Retained (%)
1 1/2 inch	0	10
3/4 inch	30	70
1/4 inch	75	100
No. 4	95	100

B. Fine Aggregate. Fine aggregate shall consist of clean, hard durable particles of natural sands, subject to the following limitations:
   1. Organic Calorimetric Test using sodium hydroxide shall result in a color not darker than Number 2 in the acceptance range.
   2. Loss on exposure to 5 cycles of the sodium sulfate soundness tests shall not exceed 8% by weight.
   3. Deleterious substances shall not exceed the values in the following table:

PORTLAND CEMENT CONCRETE
FINE AGGREGATE DELETERIOUS SUBSTANCES

Substance	Maximum % by Weight
Soft Fragments	3.0
Coal Lumps	1.0
Material passing 39 100 Sieve	3.0
Micaceous or Flaky Particles	3.0
Total for All of the Above	5.0

Fine aggregate shall be uniformly graded within the following range:

PORTLAND CEMENT CONCRETE
FINE AGGREGATE GRADATION

Sieve Size	Minimum Retained (%)	Maximum Retained (%)
No. 4	0	5
No. 8	0	20
No. 16	20	50
No. 30	50	75
No. 50	75	90
No. 100	95	100

C. Cement. All cement used shall be Type II unless otherwise allowed by the City Engineer or his/her designee. All cement and dry additives shall be stored in damp-proof conditions. Shipments of cement shall be marked and stored in such a manner as to provide positive identification. The supplier shall keep and have available for inspection at all times an accurate record of supplies and use of cement of the various types and shipments. No cement shall be used which has been subject to dampness or exposure.

D. Water. Water used for concrete shall be potable and free from excess salts, organic material, or other deleterious substances. Addition of water to the mixed concrete after specified workability has been obtained will not be allowed, nor shall any concrete be re-tempered or re-mixed.

650.040. Concrete Mixes.

A. Mix Design. Concrete mix designs shall meet the following requirements:

PORTLAND CEMENT CONCRETEMIX DESIGN REQUIREMENTS

Property	Standard Requirement	Thrust Block Material
Cement Content	6.5 Bags per Cubic Yard (Minimum)	3.5 Bags per Cubic Yard (Minimum)
28 Day Compressive Strength	4000 psi (Minimum)*	2000 psi (Minimum)*
Slump Range	1 to 3 inches	1 to 6 inches
Flatwork Slump Range	3 to 4 inches	NA
Air Content	5% to 7%	NA

* Per APWA 03 30 04, increase cement content in the mix design by 1 class between **October 1 and March 1**, i.e. Class 4000 becomes Class 5000.

B. Proportioning. The supplier shall determine proportions by weight of aggregates, cement, additives, and water required to comply with strength, workability, and other requirements detailed herein. Such proportions shall be submitted to the City Engineer or his/her designee in three copies annually along with the following tests on materials and shall be subject to his/her approval.

1. Coarse aggregate
   a. Source
   b. Deleterious substances
   c. Los Angeles Abrasion Test
   d. Sodium Sulfate Soundness Test
   e. Sieve
2. Fine aggregate
   a. Source
   b. Deleterious substances
   c. Calorimetric Test for Organics
   d. Sodium Sulfate Soundness Test
   e. Sieve and fineness modulus
3. Cement
   a. Type
   b. Supplier
   c. Analysis

Upon approval, all concrete shall be prepared in terms of the proportions so approved unless variation becomes necessary by reason of materials or conditions to achieve the requirements of these specifications, in which case such variation shall be approved in writing by the City Engineer or his/her designee. Approval by the engineer of mix proportions shall not relieve the supplier from the responsibility for obtaining the concrete strengths specified or complying will all other provisions of this specification.

C. Control. Measurements of materials except water shall be by weight. Equipment used shall be capable of controlling weight within 1% of each ingredient. Water may be measured either by volume or weight provided that an accuracy of 1% is maintained. Cement may be assumed to weigh 94 pounds per sack but proportioning aggregates for fractional sacks of cement will not be permitted unless the fractional amount is weighed for each batch.

D. Water Adjustments. Compensation for the water contained in the aggregates shall be made at least once daily or as often as inspection of the concrete may indicate that variation from this cause has occurred. The Pycnometer Method of assessing water in aggregate may be used for its determination for the purposes of this paragraph.

650.050. Masonry.

A. General. All masonry work shall meet the requirements and specifications of APWA Division 04 Masonry and related sections.

Section 850. Surface Irrigation Systems.

SECTION INDEX

850.010. General.
- A. Specifications.
- B. Size.
- C. Location.
- D. Minimum Slopes.
- E. Unusual Piping and Plumbing.

850.020. Pipe and Fittings.
- A. General.
- B. Concrete Pipe.
- C. Polyethylene Pipe.
- D. Corrugated Metal Pipe.

850.010. General.

A. Specifications. Piped irrigation facilities shall be required per Alpine City Development Code. Facilities shall meet the requirements and specifications of APWA 33 41 00 (Storm Drainage Systems). These specifications cover the installation of storm/irrigation lines. See Section 200 for improvement and design requirements, Section 250 for inspection and testing requirements, and Section 350 for earthwork and trench requirements. See standard drawings related to storm/irrigation lines.

B. Size. The City Engineer or his/her designee must approve the sizes of all proposed drain lines. The minimum size shall be determined based on Alpline Irrigation Company and Alpine City needs.

C. Location. Piped irrigation systems shall be located as close to the original ditch system as possible. Variations in location must be approved by the City Engineer or his designee and the Alpine Irrigation Company. A maximum of 400 feet of pipe shall be allowed between manholes.

D. Minimum Slopes. Slopes shall be designed to have a 2 foot per second velocity unless otherwise approved by the City Engineer. The following table lists minimum slopes for irrigation lines for each size of pipe:

MINIMUM IRRIGATION PIPE SLOPES

Pipe Diameter (inches)	Minimum Slope (%)
24	0.077
30	0.057
36	0.045
48	0.031
54	0.027
60	0.023

E. Unusual Piping and Plumbing. Special and unusual piping and plumbing for equipment or structures are treated as separate items and are not included in these standards.

850.020. Pipe and Fittings.

A. General. Reinforced concrete pipe shall be used for all lines with less than 2 feet of cover or more than 8 feet of cover. Corrugated metal pipe (CMP) may only be used when authorized by the City Engineer or his/her designee.

B. Concrete Pipe. Concrete pipe shall meet the requirements and specifications of APWA 33 05 02 (Concrete Pipe and Culvert). Reinforced concrete pipe (RCP) shall be Class III. Only new pipe may be used unless otherwise authorized by the City Engineer or his/her designee.

C. Polyethylene Pipe. Polyethylene pipe shall meet the requirements and specifications of APWA 33 05 06 (Polyethylene Pipe) Type S for storm drains and Type SP for land or groundwater drains.

D. Corrugated Metal Pipe (CMP). CMP shall meet the requirements and specifications of APWA 33 05 04 (Corrugated Metal Pipe).

Section 900. Landscaping.

SECTION INDEX

900.010. General.
A. Specifications.
B. Appurtenances.
C. As-Built Drawings.
D. Government Regulations.
E. Source.
F. Fences and Walls.
G. Tree Grates.
H. Vegetation Control.

900.020. Lawns and Grasses.
A. General.
B. Grading.

900.030. Ground Cover.
A. General.

900.040. Trees.
A. General.
B. Tree Sizes.
C. Labels.

900.010. General.

A. Specifications. These specifications are for landscape work completed on public property or private property that will become public property.

B. Appurtenances. Any minor items of labor or materials not specifically noted on the drawings or specifications; but obviously necessary for the proper completion of the work, are to be considered as incidental to and are to be included in the contract.

C. As-Built Drawings. The contractor must furnish as-build drawings to the City. These drawings should be updated whenever a change from the design is made to assure accuracy. The drawings must show a record of all departures from the contract drawings that occur during construction. These shall be kept on a clean set of prints of the contract drawings.

The Project Manager/Owner will review the "as-built drawings" to verify that changes are being recorded as construction occurs. These drawings and maintenance manuals must be submitted at the time of final inspection or in accordance to the general conditions.

D. Government Regulations. Ship landscape materials with certificates of inspection as required by governmental authorities. Comply with governing regulations applicable to landscape materials.

E. Source. Provide trees and shrubs, and other plants grown in a recognized nursery in accordance with good horticultural practice. Provide healthy, vigorous stock grown under climatic conditions similar to the locality of the project and free of disease, insects, eggs, larvae, and defects such as knots, sun-scale, injuries, abrasions, or disagreement.

Plant Materials and other landscape items will be evaluated according to compliance with drawings, schedules, and specifications; as well as overall aesthetic quality, grower or supplier reputation, physical inspection, and American Association of Nurseryman Standards (AANS). Select plants that will not be adversely affected by the existing soil chemistry at the planting location.

The source or supplier for all plant materials shall be furnished to the City prior to the delivery of any plant materials on site or stored elsewhere.

F. Fences and Walls. All fences and walls must be approved by the City. Chain link and field wire fencing shall meet the requirements and specifications of APWA 32 31 13 (Chain Link Fences and Gates) and APWA 32 31 16 (Welded Wire Fences and Gates) respectively. The relocation of fences and gates shall meet the requirements and specifications of APWA 32 01 10 (Relocate Fences and Gates) and related sections.

G. Tree Grates. Only 4 foot square D&L O-8644 or approved equivalent grates shall be used. Grates shall be set to grade with the top back of curb and sidewalk. Grates shall be set in metal frame manufactured specifically for grate. Frame shall be set in concrete extending a minimum of 6 inches from sides of frame. Concrete shall be installed to City standards for Portland Cement Concrete.

H. Vegetation Control. Vegetation control shall meet the requirements and specifications of APWA 31 31 19 (Vegetation Control).

900.020. Lawns and Grasses.

A. General. Lawns and grasses shall meet the requirements and specifications of APWA 32 92 00 (Turf and Grasses).

B. Grading. Till soil to a depth of 4 inches and remove rocks and debris over 1 inch in diameter. The elevation of top soil relative to walks, hard surfaces or edges shall be:

1. *Seeded Areas.* 1/2 inches below.
2. *Sodded Areas.* 1 1/2 inches below.

900.030. Ground Cover.

A. General. Ground cover shall meet the requirements and specifications of APWA 32 93 13 (Ground Cover) and APWA 32 01 90 (Plant Maintenance). Install according to APWA plan number 683.

900.040. Trees.

A. General. Tree and work relating to trees shall meet the requirements and specifications of APWA 32 93 43 (Tree), APWA 32 01 91 (Tree Root Cutting), APWA 32 01 93 (Pruning Trees) and 32 01 90 (Plant Maintenance). Install according to APWA plan number 681. Use 6 foot posts for any tree staking. Trees may be planted without a certified arborist when authorized by the City Engineer or his/her designee.

B. Tree Sizes. Follow Alpine City Tree Guidebook

C. Labels. Label at least one plant of each variety with a securely attached waterproof tag bearing legible designation of botanical and common name.

Section 950. Irrigation Sprinkler Systems.

SECTION INDEX

950.010. General.
- A. Specifications.
- B. Appurtenances.
- C. Pressure Verification.
- D. Plan Modifications.
- E. As-Built Drawings.
- F. Final Inspection.

950.020. Pipe and Fittings.
- A. Pipe.
- B. Main Line Fittings.
- C. Circuit Pipe Fittings.
- D. Sleeves.

950.030. Sprinkler Heads.
- A. General.
- B. Spray Heads.
- C. Rotary Heads.

950.040. Controller, Valves and Flow Meters.
- A. Controller.
- B. Manual Main Line Isolation Valve.
- C. Manual Circuit Isolation Valve.
- D. Automatic Valves.
- E. Master Valves and Flow Meters.
- F. Automatic Drain Valves.
- G. Back Flow Preventer.
- H. Stop and Waste Valves.
- I. Quick Coupler Valves.
- J. Valve Boxes.
- K. Control Wire.

950.050. Installation.
- A. Schedule.
- B. Depth and Location.
- C. Trench Backfill Material.
- D. Thrust Blocks.
- E. Flushing.
- F. Gluing.
- G. Marking Zones.

950.010. General.

A. Specifications. These specifications are for landscape work completed on private property that will become public property. All underground irrigation systems shall meet the requirements and specifications of APWA 32 84 23 (Underground Irrigation Systems).

B. Appurtenances. Any minor items of labor or materials not specifically noted on the drawings or specifications; but obviously necessary for the proper completion of the work, are to be considered as incidental to and are to be included in the contract.

C. Pressure Verification. The Contractor, prior to installing the system, must verify existing water pressure. If there is a failure to obtain the needed pressure or if an excess of pressure exists for normal operation, the Contractor shall contact the City for any adjustments to the system. Failure to report any discrepancies in pressure due to whatever reason, and installation done prior to notification of City Parks Department shall be done at the expense of the Contractor.

D. Plan Modifications. The plans show the general arrangement of all piping. Should local conditions necessitate the rearrangement of some, or if piping can be run to better advantage, the contractor, before proceeding with the work, shall prepare and submit drawings of such to the office of the Alpine City Parks Department Representative and obtain written approval before commencing work shown by these drawings.

E. As-Built Drawings. Before the final inspection is complete, the contractor must furnish as-build drawings. These drawings should be updated on a daily basis to assure accuracy. The drawings must show the location of all valves, pipe, heads, controller control lines, and drain valves used on the job. These drawings and maintenance manuals must be submitted at the time of final inspection or in accordance to the general conditions.

F. Final Inspection. The Contractor shall operate, maintain, and guarantee the irrigation sprinkler system until all landscaping on the project is approved by the Alpine City Parks Department at a final inspection. Contractor shall submit manufacturer's technical product maintenance data and installation instructions for irrigation sprinkler system materials and products to the City before final inspection.

950.020. Pipe and Fittings.

A. Pipe. Use solvent weld schedule 40 PVC for main line pipe 3 inches in diameter and smaller. Use Class 200 PVC for main line pipe larger than 3 inches in diameter.

B. Main Line Fittings. Use solvent weld schedule 40 PVC fittings for pipe smaller than 3 inches in diameter. All fittings for pipe 3 inch and larger pipe shall be ductile iron, grade 65-45-12 in accordance with ASTM A-536.

Fittings shall have deep bell push on joints with gaskets meeting ASTM F977. Fittings shall be Harco Deep Bell as manufactured by the Hanington Corporation of Lynchburg, VA or approved equivalent. Transition gaskets are not allowed.

C. Circuit Pipe Fittings. Use solvent weld schedule 40 PVC fittings.

D. Sleeves. Pipe and control wiring and tubing under walks, roads and other hard surfaces shall be installed in solvent weld Class 40 PVC sleeves of adequate size. Sleeves for pipes shall be a minimum of 3 inches in diameter or one and a half times the size of the pipes whichever is greater. Sleeves shall be straight and level or less than 2% grade. All wiring shall be placed in its own conduit. Wire conduit may be ran inside of sprinkler pipe sleeves. Conduit for control wires shall have minimum inside diameters according to the following chart:

MINIMUM SLEEVE CONDUIT SIZES

Number of Wires	Conduit I.D.
1 to 7	1 inch
8 to 11	1 ½ inch
12 to 22	2 inch
23 to 31	2 ½ inch
32 to 36	3 inch

950.030. Sprinkler Heads.

A. General. Install according to APWA plan number 621 and 622, but do not install PVC elbow and riser.

B. Spray Heads. All spray type sprinkler heads shall be Rainbird "1804" PRS (pressure reducing spray) series or approved equivalent. All lawn spray heads shall be installed on swing pipe with two spiral barbed ells.

C. Rotary Heads. All rotary type sprinkler heads shall be Rainbird Falcon 6500 or RS5000 series or approved equivalent. All stream rotary and impact heads capable of distributing 10 gallons per minute or more shall be installed on pre-assembled swing joint by Spears or an approved equivalent.

950.040. Controller, Valves and Flow Meters.

A. Controller. Controller and pedestal shall be the same type as those used in the City central control system. The controller shall be as described in the irrigation legend on the drawings.

B. Manual Main Line Isolation Valve. See standard drawing for pressure pipe main line valves.

C. Manual Circuit Isolation Valve. Brass ball valve with handle.

D. Automatic Valves. Automatic valves shall be Rainbird PEB electric remote control valves or an approved equivalent. A manual circuit isolation valve shall be installed on the supply side of each automatic valve. Install according to APWA plan number 633, but do not install schedule 80 PVC union.

E. Master Valves and Flow Meters. Master valves and flow meters must be installed on main supply line and/or according to design and must be compatible with the City central control system.

F. Automatic Drain Valves. Install according to APWA plan number 632.

G. Back Flow Preventer. Shall be required on connections to the drinking water system. Install according to APWA standard plan number 631.

H. Stop and Waste Valves. Stop and waste valves shall be Mueller H - 10288 Oraseal or an approved equivalent. Stop and Waste valve shall be of manual type for operation by handle key. Stop and waste valves shall be installed in a typical water meter can, see Standard Details.

I. Quick Coupler Valves. Quick coupler valves shall be installed with brass riser and pre-manufactured swing joint. At least 2 quick coupler valves shall be installed, one at each end of main line. Valves shall be 1 inch standard.

J. Valve Boxes. Valves shall be located in lawn or planted areas. Avoid locating valves in areas of high pedestrian and vehicular circulation. Valve boxes shall be at finished grade with valve stems 4 inches minimum and 12 inches maximum below top of box and with 3 inches of pea gravel or 3/4 inch minus crushed gravel under the valve. Valve boxes shall be rectangular, heavy duty and green in color. Valve boxes for automatic valves shall be large enough to enclose manual circuit isolation valve and automatic valve.

K. Control Wire. Install wire according to APWA plan number 651. Add two extra blue control wires per controller to the longest run for emergency use and mark it in the control box as an extra wire.

950.050. Installation.

A. Schedule. Contractor shall submit a construction schedule of anticipated work time to facilitate timely visits for review of work. Schedule must be submitted to the City before any landscaping may begin

B. Depth and Location. Lines bordering curbs or sidewalks shall be 6 inches away to allow for maintenance and access to the lines. Control wires must be buried at least 12 inches below finished grade and bundled with a plastic tape every 20 feet.

C. Trench Backfill Material. All trenches shall be backfilled in 12 inch lifts and tamped sufficiently to insure no settling of the surface. No rocks larger than 1 inch shall be allowed within 3 inches of the pipe. The Contractor, in placing the irrigation lines, and appurtenances, may uncover material not suitable for finished grading. This material shall be removed from the site. After the installation of the lines, the finished grading shall be smoothed over and restored to its original condition, using additional topsoil where necessary.

D. Thrust Blocks. All mainlines greater than 2 inches in size shall be installed with thrust blocks wherever a change of direction occurs. Thrust blocks shall be installed as follows:

1. Bearing area of concrete thrust-block based on 200-PSI pressure and safe soil bearing load of 2,000 pounds per square foot.
2. Concrete blocking shall be cast in place and have a minimum of 1/4 square foot bearing against the fittings.
3. Block shall bear against fittings only and shall be clear of joints.
4. Contractor shall install block adequate to withstand full test pressure as well as to continuously withstand operation pressure under all conditions of service.

E. Flushing. When the pipe lines are connected and the sprinkler risers in place but before any heads are installed, the control valves shall be opened and flushed with a full head of water to clean out the system.

F. Gluing. Gluing of PVC pipes shall be done with gray "Weld-on 711" and "Weld-on P70" primer.

G. Marking Zones. Valves must be tagged with labels indicating which zone they operate.

Section 1000. Standard Details

Signed: Jed Muhlestein

Alpine City Engineer

CONSTRUCTION DETAILS

*Adopted*_____

ALPINE CITY STANDARD DETAILS

ALPINE CITY ADOPTS 2017 APWA STANDARD SPECIFICATIONS AND DETAILS. FOR CITY SPECIFIC DETAILS, PLEASE SEE THE FOLLOWING:

STREETS

1. Street Cross-Sections
2. Alternate Street Cross-Sections
3. Street Cross-Sections Unequal Elevations
4. Sidewalk, Curb & Gutter, Waterway
5. Class A & B Trail Cross-Sections
6. Class C, D, & E Trail Cross-Sections
7. Cul-de-sac Detail
8. Knuckle Detail
9. Standard Setbacks
10. Temporary Turn-a-round

UTILITIES

11. Standard Street Intersection and Utility Location
12. Standard Lot Utility Locations
13. Utility Conflict
14. City Utilities in Common Trench
15. Ditch Crossing
16. Manhole Ring & Cover (typical)
17. Sewer Manhole & Service Connection (typical)
18. Storm Drain Sump (typical)
19. Sump Disposal (typical)
20. Curb Face Drop Inlet Box (typical)
21. Dipstone Outlet
22. Flush Valve (typical)
23. Fire Hydrant
24. Pressurized Irrigation Service
25. Pressurized Irrigation Service w/ PRV
26. Pressurized Irrigation Airvac
27. Water Connection & Valve Box Details
28. Temporary Sewer Main Cleanout

MISC

29. Public Open Space Fencing
30. Fencing Regulations
31. Street Lights

32. Sight Triangle
33. Standard Seed Mixtures
34. Irrigation Company Ditches

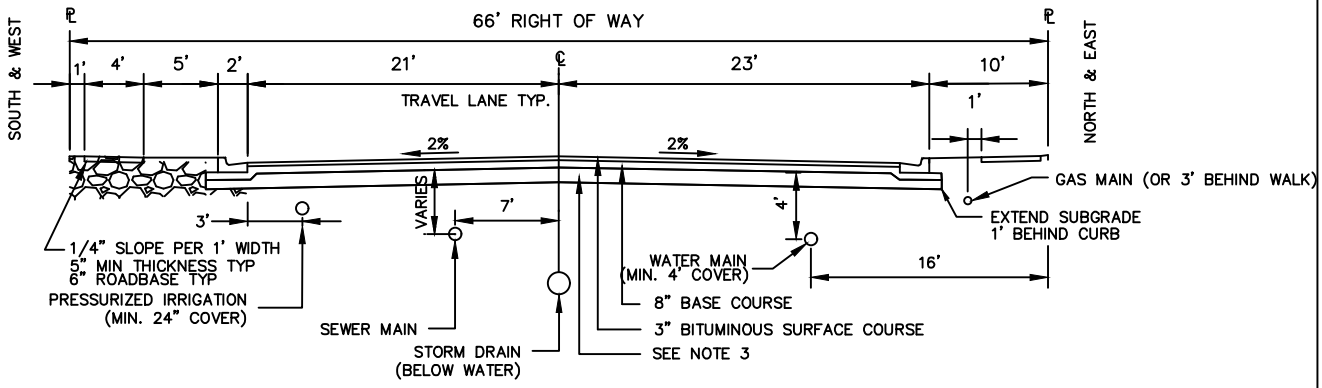

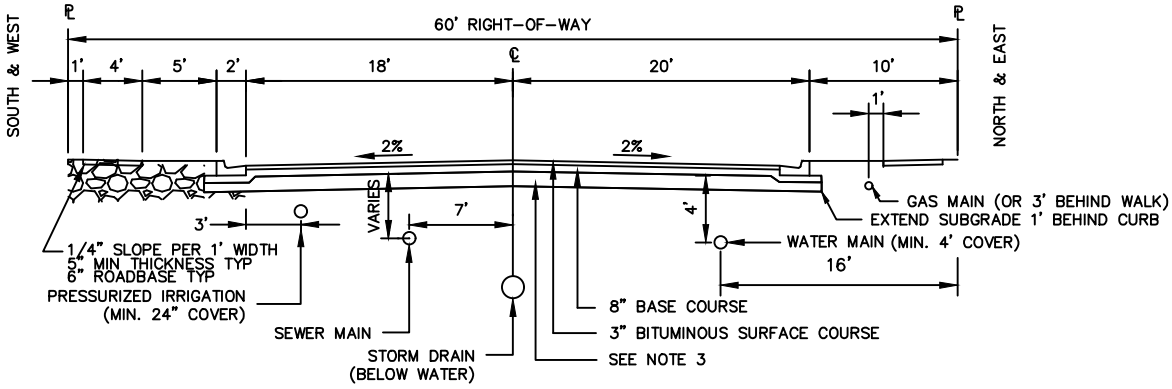

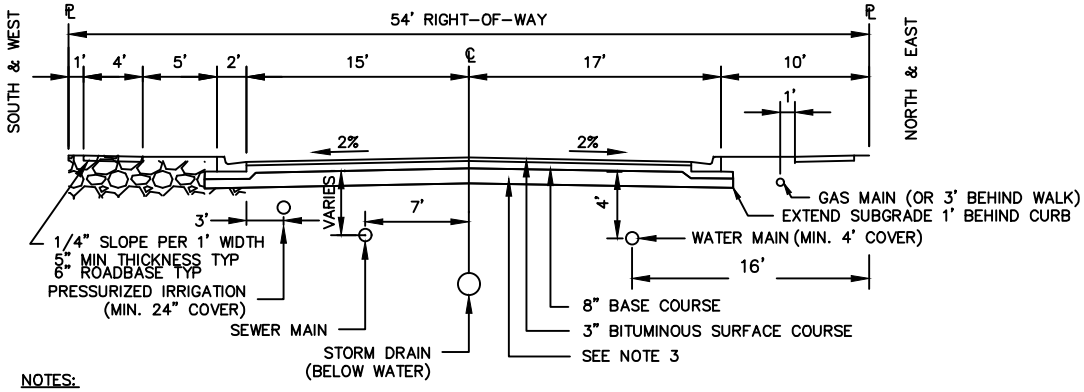

NOTES:

1. WATER VALVES AND 5-INCH VALVE OPENING MUELLER FIRE HYDRANTS SHALL BE LOCATED AS APPROVED.
2. NO WATER LINE SMALLER THAN 8-INCH DIA. SHALL BE INSTALLED WITHOUT APPROVAL OF CITY COUNCIL.
3. SUBGRADE DEPTHS VARY DEPENDING ON CBR VALUE OF THE AREA, SEE ALPINE CITY STANDARD SPECIFICATIONS
4. CULINARY WATER MAINS SHALL BE ON THE NORTH AND EAST SIDES OF THE STREET.
   PRESSURIZED IRRIGATION AND SEWER LINES SHALL BE ON THE SOUTH AND WEST SIDES OF THE STREET.

STREET CROSS-SECTIONS & UTILITY LOCATIONS

N.T.S.

STATEMENT OF USE

THIS DOCUMENT AND ANY ILLUSTRATIONS HEREON ARE PROVIDED AS STANDARD CONSTRUCTION DETAILS WITHIN ALPINE CITY. DEVEATION FROM THIS DOCUMENT REQUIRES APPROVAL OF ALPINE CITY, ALPINE CITY CORPRTATION CAN NOT BE HELD LIABLE FOR MISSUSE OR CHANGES REGARDING THIS DOCUMENT.

REVISION

NO.		BY	APRL	DATE

ALPINE CITY
ESTABLISHED 1850

CAD FILE: E:\ENGINEERING\STANDARD DRAWINGS\2015 UPDATED (CURRENT)\1 STREET CROSS-SECTIONS

STREET CROSS-SECTIONS

ALPINE CITY
20 NORTH MAIN
ALPINE, UT 84004

STANDARD DRAWING NUMBER:	1
PLOT SCALE:	N.T.S.
DRAWN BY:	B.D.B.
DESIGN BY:	
CHECKED BY:	
ADOPTED DATE:	10/13/05

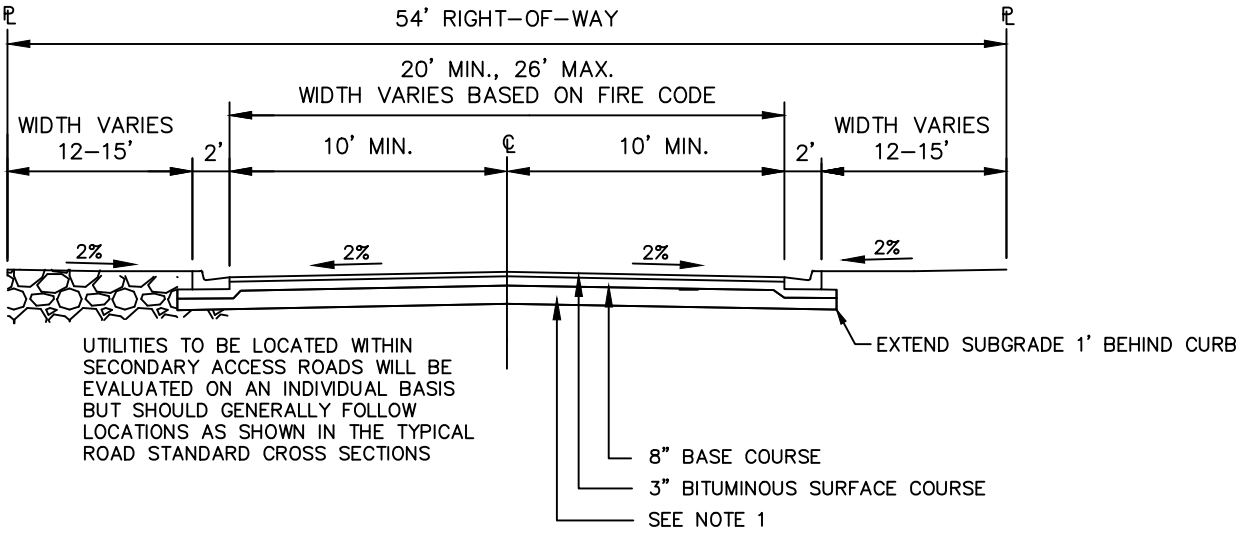

NOTES:

1. SUBGRADE DEPTHS VARY DEPENDING ON CBR VALUE OF THE AREA, SEE ALPINE CITY STANDARD SPECIFICATIONS
2. FIRE CODE REQUIRES AN "ALL WEATHER" SURFACE FOR SECONDARY ACCESS ROUTES. IT IS AT THE DISCRETION OF THE CITY COUNCIL WHETHER SECONDARY ACCESS ROADS WILL BE ASPHALT OR GRAVEL. SEE GRAVEL OPTION BELOW.

SECONDARY ACCESS

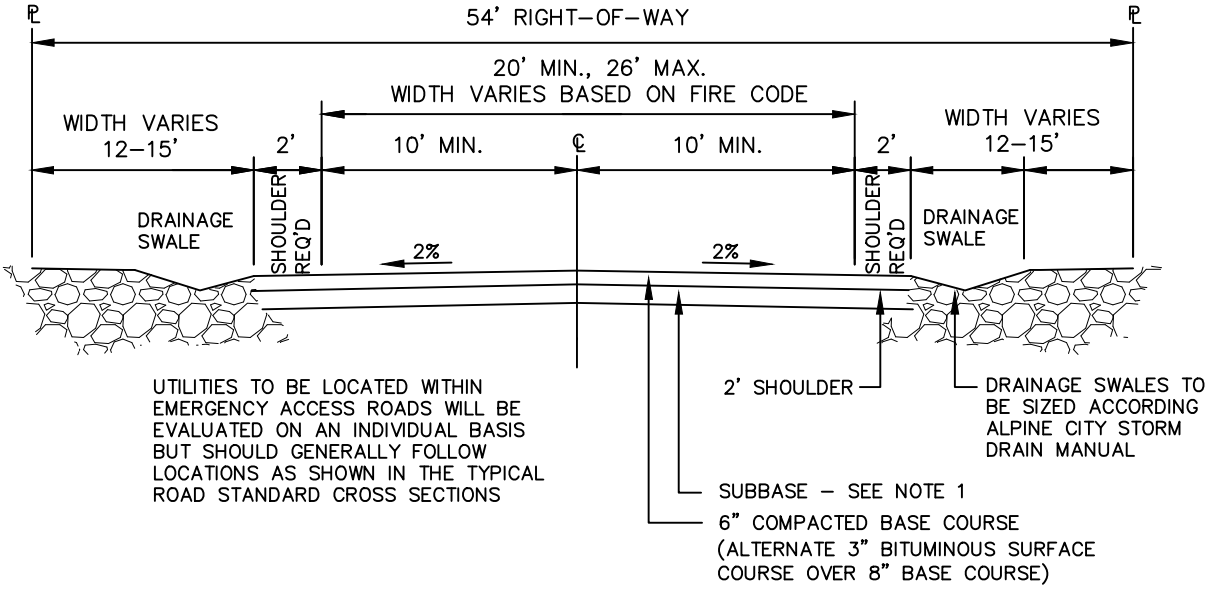

NOTES:

1. SUBGRADE DEPTHS VARY DEPENDING ON CBR VALUE OF THE AREA, SEE ALPINE CITY STANDARD SPECIFICATIONS
2. CURB AND GUTTER MAY OR MAY NOT BE REQUIRED AT THE DISCRETION OF THE CITY COUNCIL

SECONDARY ACCESS OPTION

STREET CROSS-SECTIONS

N.T.S.

STATEMENT OF USE

THIS DOCUMENT AND ANY ILLUSTRATIONS HEREON ARE PROVIDED AS STANDARD CONSTRUCTION DETAILS WITHIN ALPINE CITY. DEVEATION FROM THIS DOCUMENT REQUIRES APPROVAL OF ALPINE CITY, ALPINE CITY CORPRTATION CAN NOT BE HELD LIABLE FOR MISSUSE OR CHANGES REGARDING THIS DOCUMENT.

REVISION

NO.		BY	APRL	DATE

CAD FILE: E:\ENGINEERING\STANDARD DRAWINGS\2015 UPDATED (CURRENT)\1A STREET CROSS-SECTIONS (SECONDARY & EMERGENCY)

ALPINE CITY
ESTABLISHED 1850

STREET CROSS-SECTIONS

ALPINE CITY
20 NORTH MAIN
ALPINE, UT 84004

STANDARD DRAWING NUMBER: 1A

PLOT SCALE:	N.T.S.
DRAWN BY:	B.D.B.
DESIGN BY:	
CHECKED BY:	
ADOPTED DATE:	10/13/05

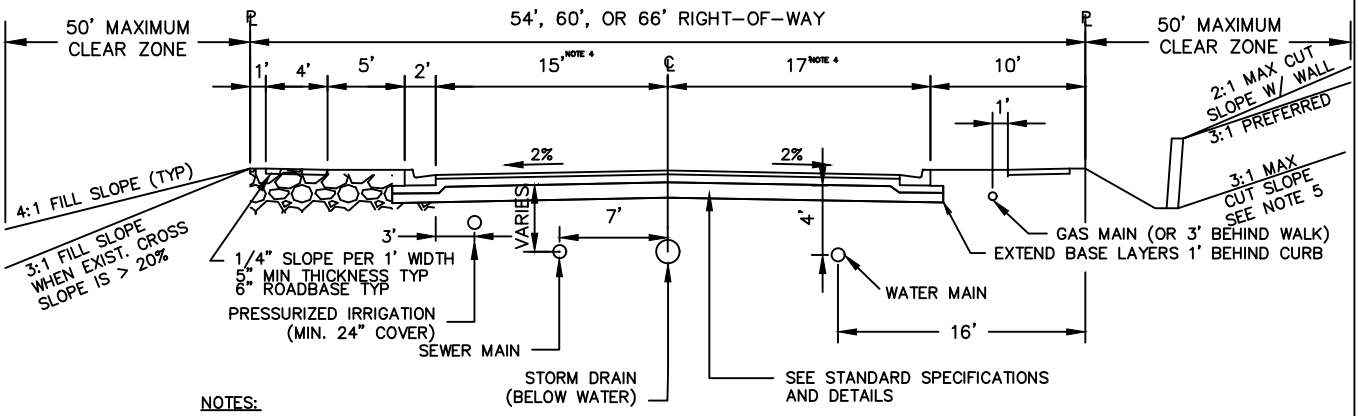

NOTES:

1. CLEAR ZONE DEFINES THE MAXIMUM HORIZONTAL DISTANCE PERPENDICULAR TO ROAD THAT CAN BE DISTURBED TO CONSTRUCT STREET SECTION.
2. ENGINEERED RETAINING WALLS ARE ALLOWED PER DEVELOPMENT CODE SECTION 3.32
3. BORROW DITCH AND CROSS DRAIN PIPES SHALL BE DESIGNED SUCH THAT SILTS AND MATERIAL WILL NOT ENTER STREET CROSS SECTION. POND ON CUT SIDE OF ROAD, AND / OR DRAIN TO APPROPRIATE COLLECTION / DETENTION SYSTEM ON FILL SIDE OF ROAD. REFER TO ALPINE CITY STORM DRAIN DESIGN MANUAL.
4. WIDTH VARIES PER RIGHT OF WAY, SEE STANDARD DETAILS.
5. CUT SLOPES GREATER THAN 3:1 MAY BE ALLOWED PER GEOTECHNICAL REPORT RECOMMENDATION. UNDER NO CIRCUMSTANCE WILL A CUT SLOPE GREATER THAN 2:1 BE ALLOWED WITHOUT A RETAINING WALL.

STREET CROSS-SECTIONS WITH REQUIRED CUT AND FILL SLOPES

N.T.S.

STATEMENT OF USE

THIS DOCUMENT AND ANY ILLUSTRATIONS HEREON ARE PROVIDED AS STANDARD CONSTRUCTION DETAILS WITHIN ALPINE CITY. DEVEATION FROM THIS DOCUMENT REQUIRES APPROVAL OF ALPINE CITY, ALPINE CITY CORPRTATION CAN NOT BE HELD LIABLE FOR MISSUSE OR CHANGES REGARDING THIS DOCUMENT.

REVISION

NO.		BY	APRL	DATE

ALPINE CITY
ESTABLISHED 1850

CAD FILE: E:\ENGINEERING\STANDARD DRAWINGS\2015 UPDATED (CURRENT)\15 STREET CROSS-SECTIONS WITH CUT AND FILL SLOPES

STREET CROSS-SECTIONS

ALPINE CITY
20 NORTH MAIN
ALPINE, UT 84004

STANDARD DRAWING NUMBER: 1b

PLOT SCALE:	N.T.S.
DRAWN BY:	WJM
DESIGN BY:	
CHECKED BY:	
ADOPTED DATE:	10/13/05

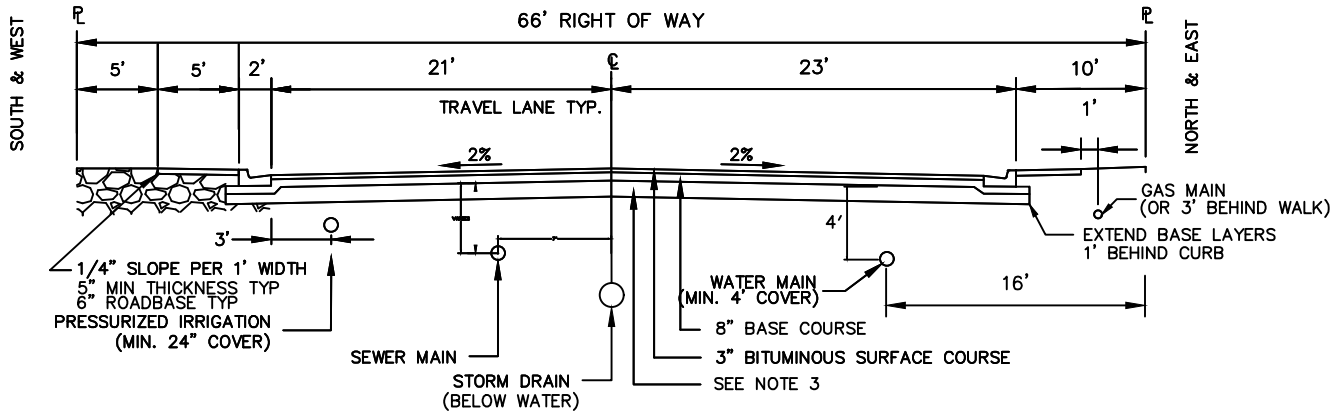

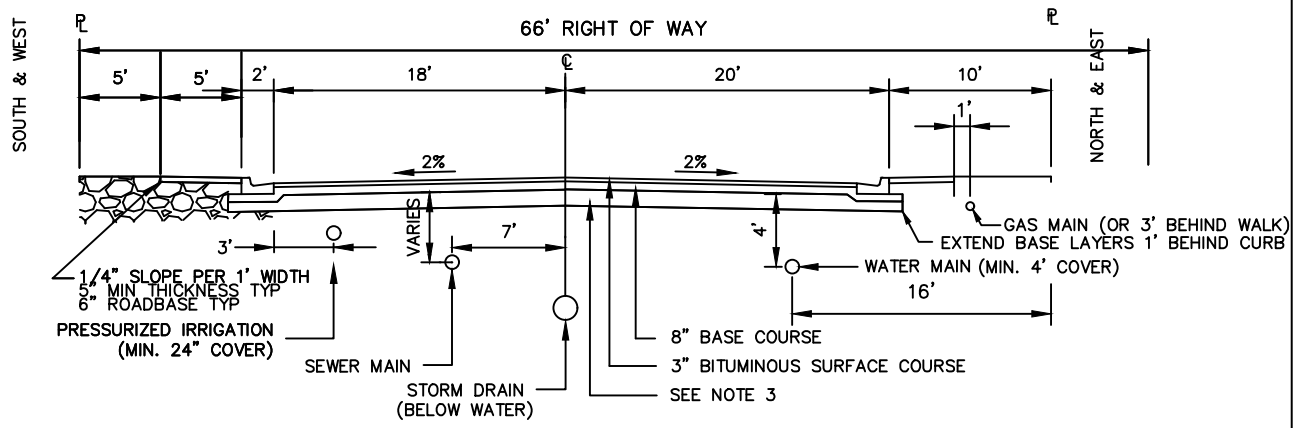

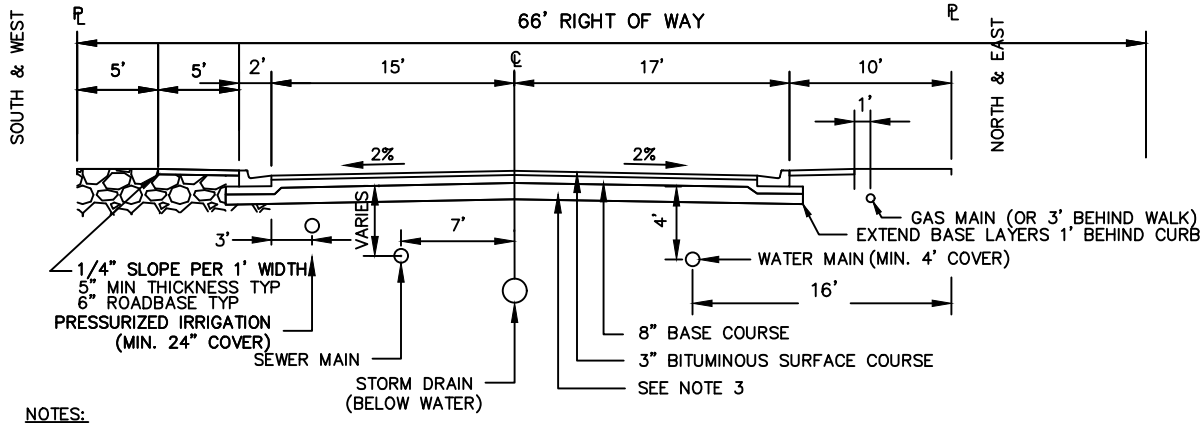

NOTES:

1. WATER VALVES AND 5-INCH VALVE OPENING MUELLER FIRE HYDRANTS SHALL BE LOCATED AS APPROVED.
2. NO WATER LINE SMALLER THAN 8-INCH DIA. SHALL BE INSTALLED WITHOUT APPROVAL OF CITY COUNCIL.
3. SUBGRADE DEPTHS VARY DEPENDING ON CBR VALUE OF THE AREA, SEE ALPINE CITY STANDARD SPECIFICATIONS.
4. CULINARY WATER MAINS SHALL BE ON THE NORTH AND EAST SIDES OF THE STREET.
   PRESSURIZED IRRIGATION AND SEWER LINES SHALL BE ON THE SOUTH AND WEST SIDES OF THE STREET.
5. USE OF ALTERNATE STREET CROSS-SECTIONS REQUIRES APPROVAL BY ALPINE CITY.

ALTERNATE STREET CROSS-SECTIONS & UTILITY LOCATIONS

N.T.S.

STATEMENT OF USE

THIS DOCUMENT AND ANY ILLUSTRATIONS HEREON ARE PROVIDED AS STANDARD CONSTRUCTION DETAILS WITHIN ALPINE CITY. DEVEATION FROM THIS DOCUMENT REQUIRES APPROVAL OF ALPINE CITY, ALPINE CITY CORPRTATION CAN NOT BE HELD LIABLE FOR MISSUSE OR CHANGES REGARDING THIS DOCUMENT.

REVISION

NO.		BY	APRL	DATE

ALPINE CITY
ESTABLISHED 1850

CAD FILE: D:\ENGINEERING\STANDARD DRAWINGS\2016 UPDATED (CURRENT)\2 ALTERNATE STREET CROSS-SECTIONS

ALTERNATE STREET CROSS-SECTIONS

ALPINE CITY
20 NORTH MAIN
ALPINE, UT 84004

STANDARD DRAWING NUMBER: 2

PLOT SCALE:	N.T.S.
DRAWN BY:	WJM
DESIGN BY:	
CHECKED BY:	
ADOPTED DATE:	2015

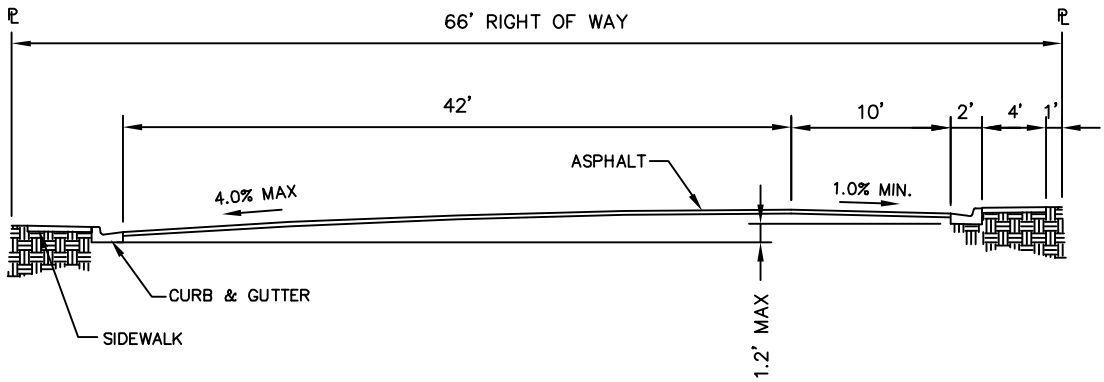

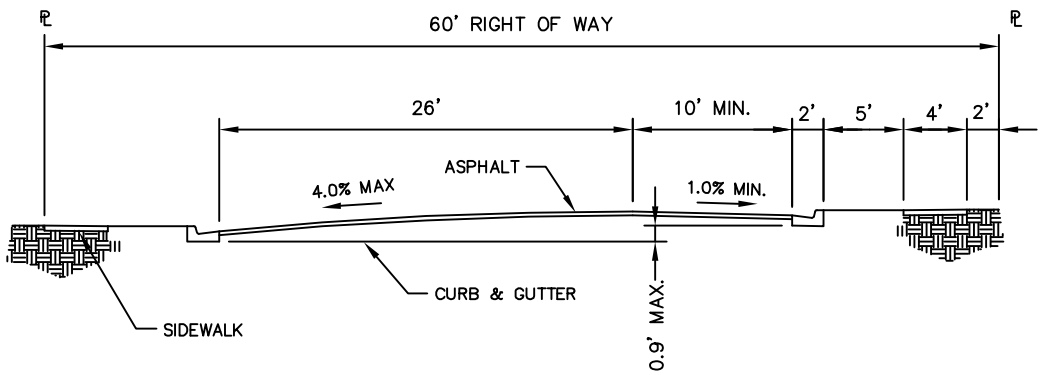

STREET CROSS-SECTIONS

(CURBS AT UNEQUAL ELEVATIONS)

N.T.S.

STATEMENT OF USE

THIS DOCUMENT AND ANY ILLUSTRATIONS HEREON ARE PROVIDED AS STANDARD CONSTRUCTION DETAILS WITHIN ALPINE CITY. DEVEATION FROM THIS DOCUMENT REQUIRES APPROVAL OF ALPINE CITY, ALPINE CITY CORPRTATION CAN NOT BE HELD LIABLE FOR MISSUSE OR CHANGES REGARDING THIS DOCUMENT.

REVISION

NO.		BY	APRL	DATE

ALPINE CITY
ESTABLISHED 1850

CAD FILE: E:\ENGINEERING\STANDARD DRAWINGS\2015 UPDATED\3 UNEQ-ROW

STREET CROSS-SECTIONS
UNEQUAL ELEVATIONS

ALPINE CITY
20 NORTH MAIN
ALPINE, UT 84004

STANDARD DRAWING NUMBER:	3
PLOT SCALE:	N.T.S.
DRAWN BY:	WJM
DESIGN BY:	
CHECKED BY:	
ADOPTED DATE:	4/14/04

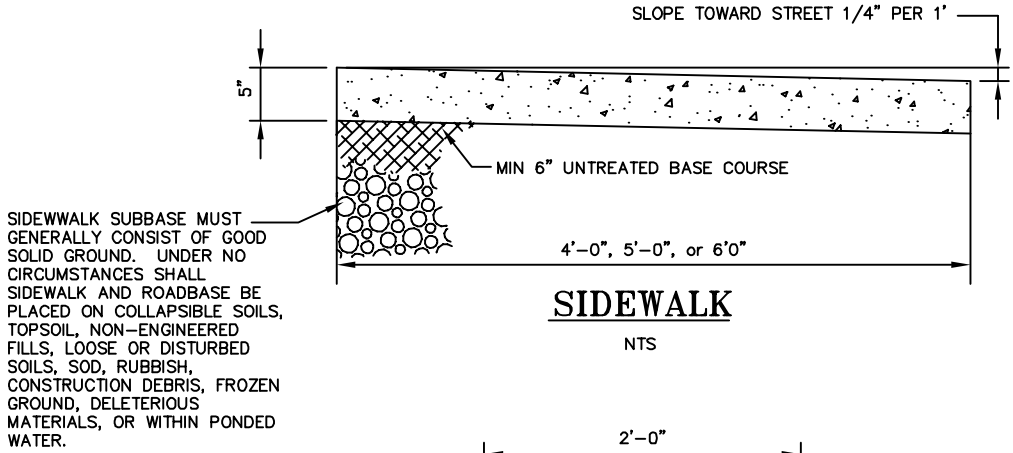

SIDEWALK

NTS

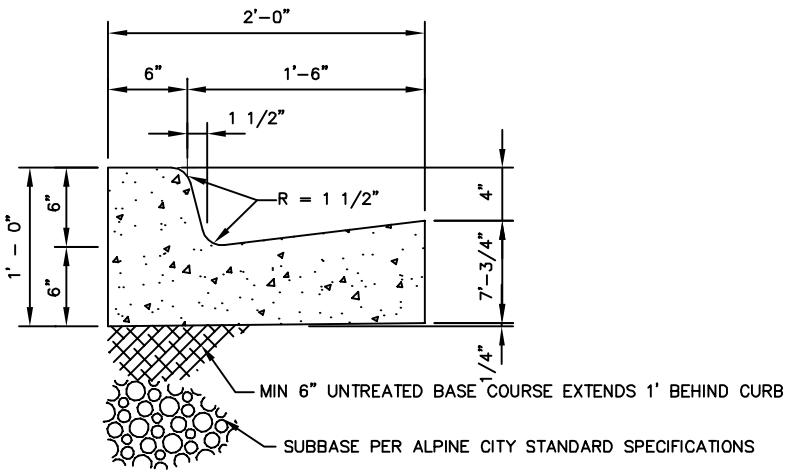

HIGH BACK CURB & GUTTER

NTS

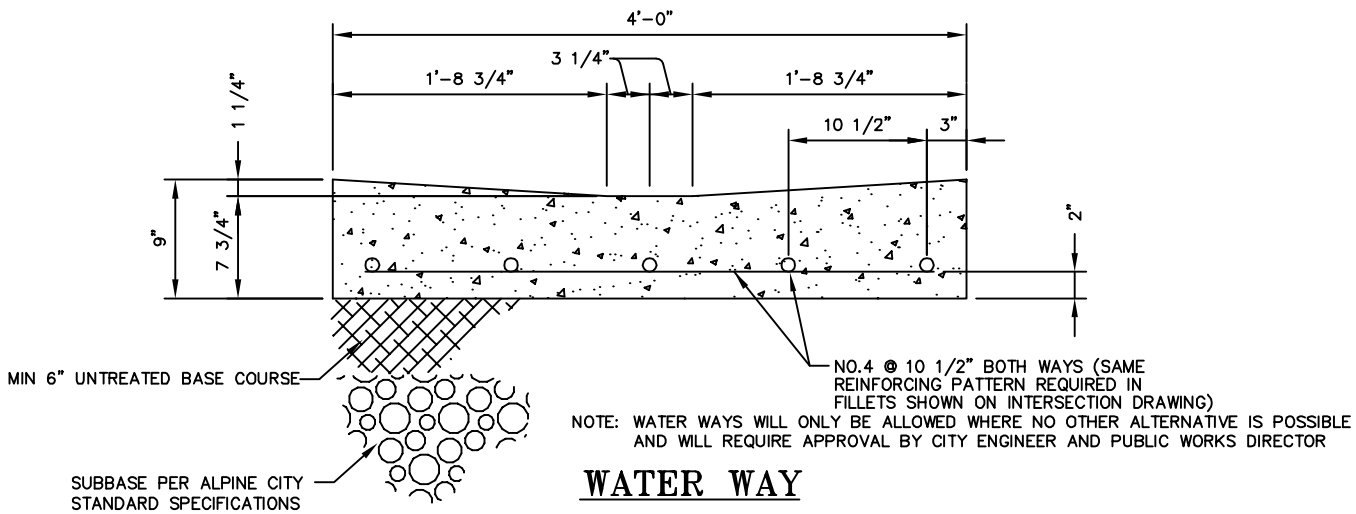

WATER WAY

NTS

STATEMENT OF USE

THIS DOCUMENT AND ANY ILLUSTRATIONS HEREON ARE PROVIDED AS STANDARD CONSTRUCTION DETAILS WITHIN ALPINE CITY. DEVEATION FROM THIS DOCUMENT REQUIRES APPROVAL OF ALPINE CITY, ALPINE CITY CORPRTATION CAN NOT BE HELD LIABLE FOR MISSUSE OR CHANGES REGARDING THIS DOCUMENT.

REVISION

NO.		BY	APRL	DATE

ALPINE CITY
ESTABLISHED 1850

CAD FILE:E:\ENGINEERING\STANDARD DRAWINGS\2015 UPDATED (CURRENT)\4 SIDEWALK, CURB & GUTTER, WATER WAY

SIDEWALK, CURB & GUTTER, WATER WAY

ALPINE CITY
20 NORTH MAIN
ALPINE, UT 84004

STANDARD DRAWING NUMBER:	4
PLOT SCALE:	N.T.S.
DRAWN BY:	WJM
DESIGN BY:	
CHECKED BY:	
ADOPTED DATE:	4/14/04

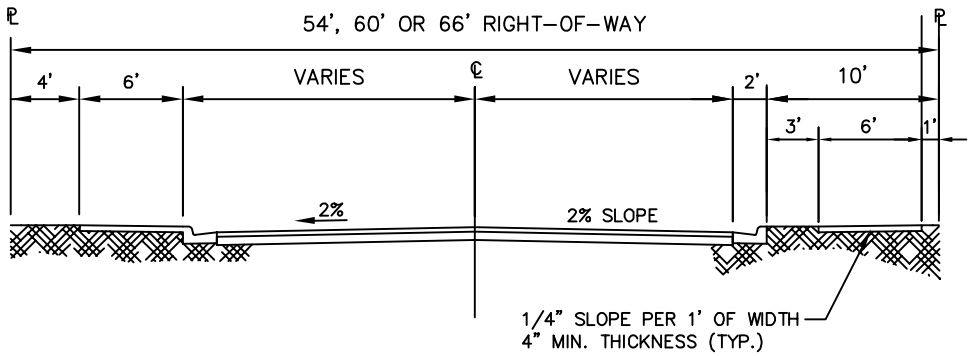

NOTES:

1. ALPINE CITY RESERVES THE RIGHT TO DETERMINE WHETHER THE COMBINATION OR PLANTER STRIP OPTION WILL BE CONSTRUCTED ON A CASE-BY-CASE BASIS.
2. IN SOME CASES, A 5' SIDEWALK WILL BE SUBSTITUTED. IF THE 5' SIDEWALK IS CONSTRUCTED, THE PLANTER STRIP WIDTH WILL BE INCREASED TO 4'.
3. ALL DEVELOPER BUILT TRAILS (NEW OR REFURBISHED) MUST BE BUILT TO INDUSTRY RECOGNIZED STANDARDS AND BE APPROVED BY THE ALPINE CITY TRAIL COMMITTEE.

CLASS A (6' SIDEWALK) TRAIL CROSS-SECTION

N.T.S.

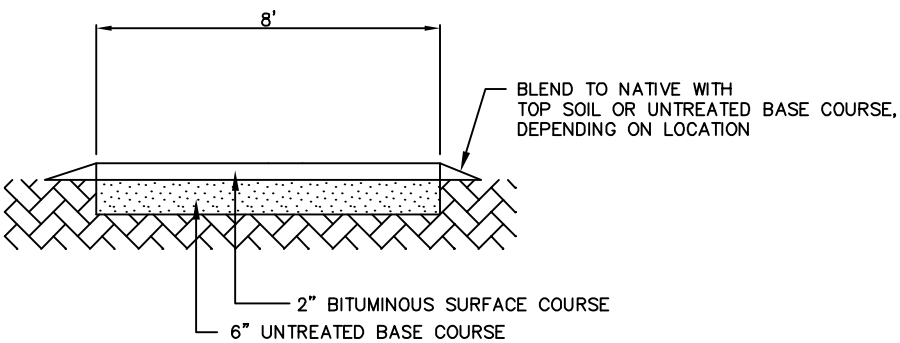

CLASS B (ASPHALT) TRAIL CROSS-SECTION

N.T.S.

STATEMENT OF USE

THIS DOCUMENT AND ANY ILLUSTRATIONS HEREON ARE PROVIDED AS STANDARD CONSTRUCTION DETAILS WITHIN ALPINE CITY. DEVEATION FROM THIS DOCUMENT REQUIRES APPROVAL OF ALPINE CITY, ALPINE CITY CORPRTATION CAN NOT BE HELD LIABLE FOR MISSUSE OR CHANGES REGARDING THIS DOCUMENT.

REVISION

NO.		BY	APRL	DATE

ALPINE CITY
ESTABLISHED 1850

CAD FILE: E:\ENGINEERING\STANDARD DRAWINGS\2015 UPDATED (CURRENT)\5 CLASS A & B TRAIL CROSS-SECTIONS

CLASS A & B TRAIL CROSS-SECTIONS

ALPINE CITY
20 NORTH MAIN
ALPINE, UT 84004

STANDARD DRAWING NUMBER:	5
PLOT SCALE:	N.T.S.
DRAWN BY:	WJM
DESIGN BY:	
CHECKED BY:	
ADOPTED DATE:	4/14/04

NOTE:
ALL DEVELOPER BUILT TRAILS (NEW OR REFURBISHED) MUST BE BUILT TO INDUSTRY RECOGNIZED STANDARDS AND BE APPROVED BY THE ALPINE CITY TRAIL COMMITTEE.

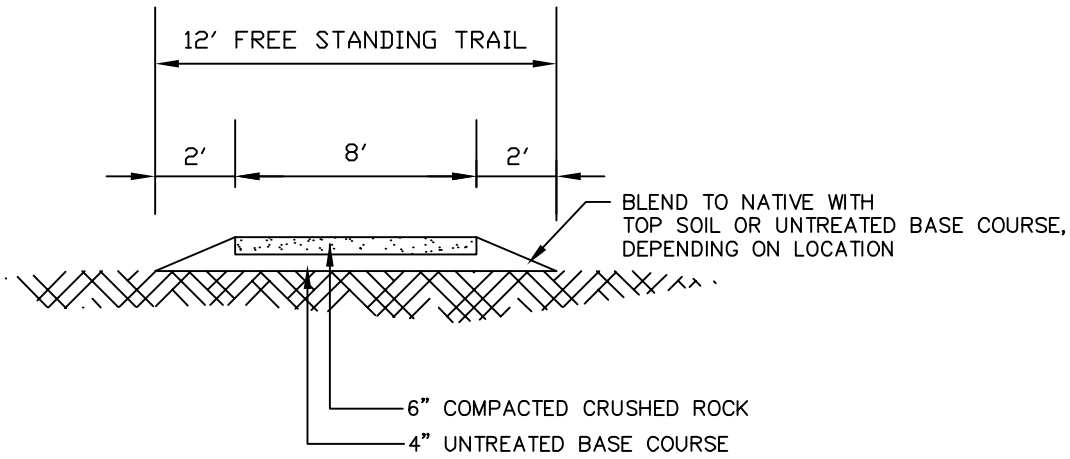

CLASS C 8' CRUSHED ROCK TRAIL CROSS-SECTION

N.T.S.

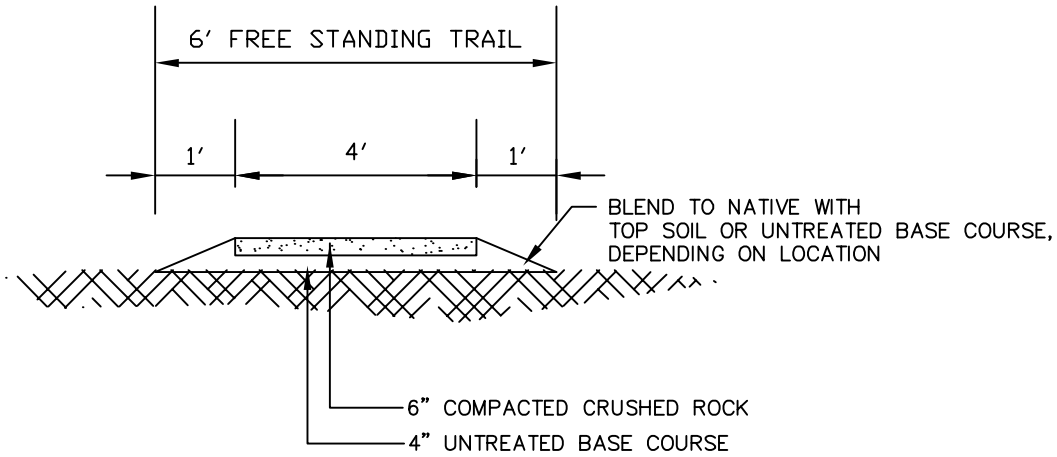

CLASS D 4' CRUSHED ROCK TRAIL CROSS-SECTION

N.T.S.

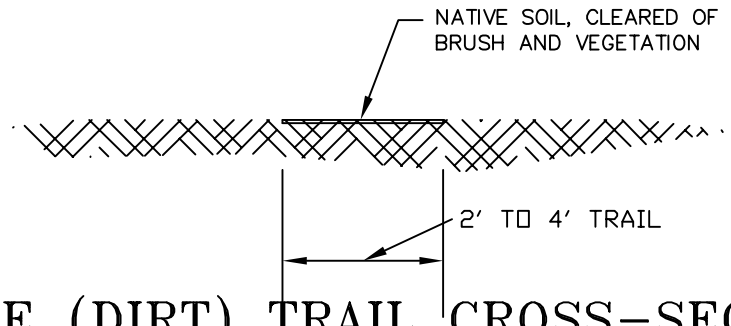

CLASS E (DIRT) TRAIL CROSS-SECTION

N.T.S.

STATEMENT OF USE

THIS DOCUMENT AND ANY ILLUSTRATIONS HEREON ARE PROVIDED AS STANDARD CONSTRUCTION DETAILS WITHIN ALPINE CITY. DEVEATION FROM THIS DOCUMENT REQUIRES APPROVAL OF ALPINE CITY, ALPINE CITY CORPRTATION CAN NOT BE HELD LIABLE FOR MISSUSE OR CHANGES REGARDING THIS DOCUMENT.

REVISION

NO.		BY	APRL	DATE

ALPINE CITY
ESTABLISHED 1850

CAD FILE: E:\ENGINEERING\STANDARD DRAWINGS\2010 UPDATED (CURRENT)\6 CLASS C & D TRAIL CROSS-SECTIONS

CLASS C, D, & E TRAIL CROSS-SECTIONS

ALPINE CITY
20 NORTH MAIN
ALPINE, UT 84004

STANDARD DRAWING NUMBER:	6
PLOT SCALE:	N.T.S.
DRAWN BY:	WJM
DESIGN BY:	
CHECKED BY:	
ADOPTED DATE:	10/13/05

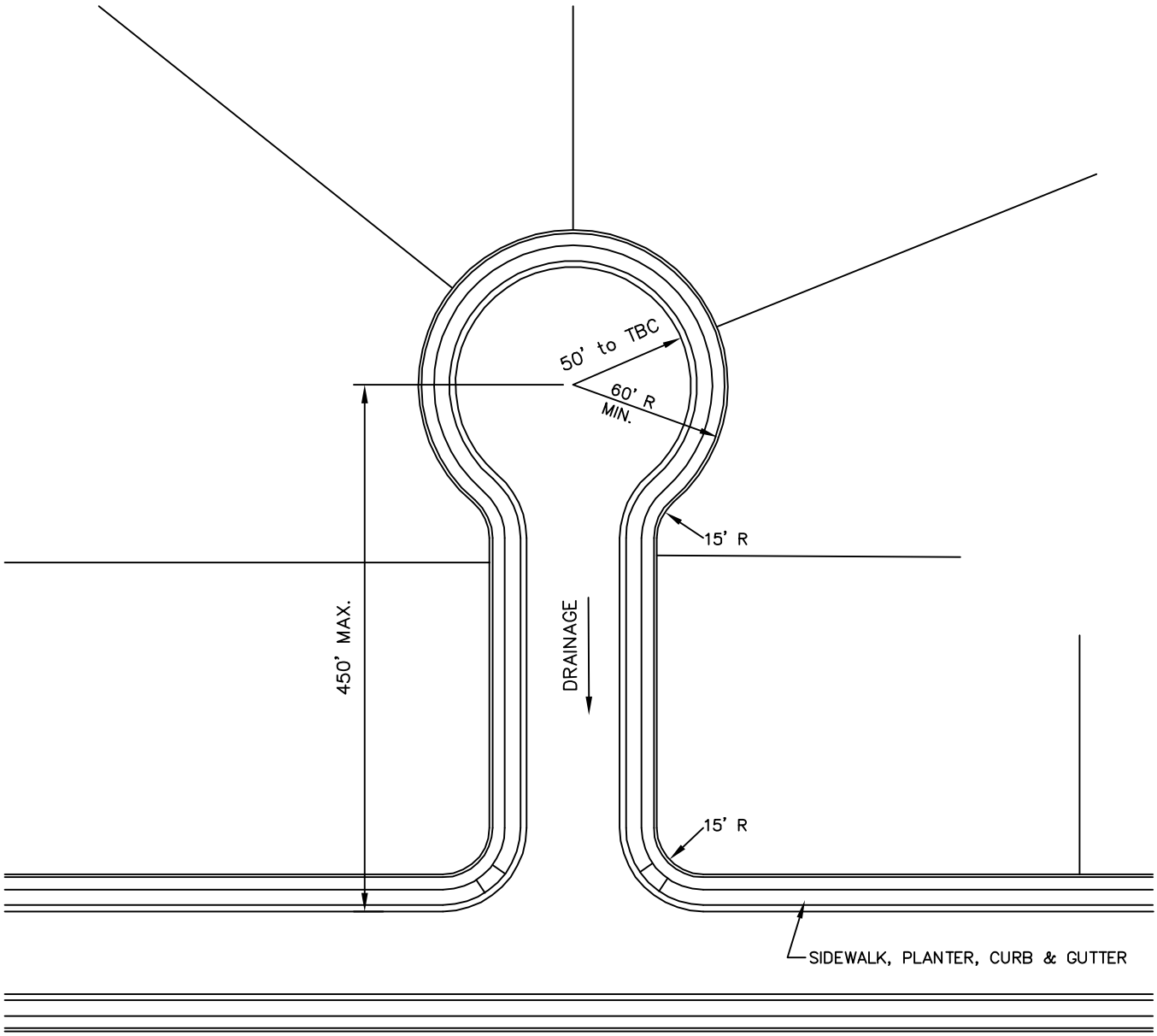

CUL–DE–SAC DETAIL

N.T.S.

STATEMENT OF USE

THIS DOCUMENT AND ANY ILLUSTRATIONS HEREON ARE PROVIDED AS STANDARD CONSTRUCTION DETAILS WITHIN ALPINE CITY. DEVEATION FROM THIS DOCUMENT REQUIRES APPROVAL OF ALPINE CITY, ALPINE CITY CORPRTATION CAN NOT BE HELD LIABLE FOR MISSUSE OR CHANGES REGARDING THIS DOCUMENT.

REVISION

NO.		BY	APRL	DATE

ALPINE CITY
ESTABLISHED 1850

CAD FILE: E:\ENGINEERING\STANDARD DRAWINGS\2015 UPDATED\7 CUL-DE-SAC DETAIL

CUL-DE-SAC DETAIL

ALPINE CITY
20 NORTH MAIN
ALPINE, UT 84004

STANDARD DRAWING NUMBER:	7
PLOT SCALE:	N.T.S.
DRAWN BY:	BDB
DESIGN BY:	
CHECKED BY:	
ADOPTED DATE:	10/13/05

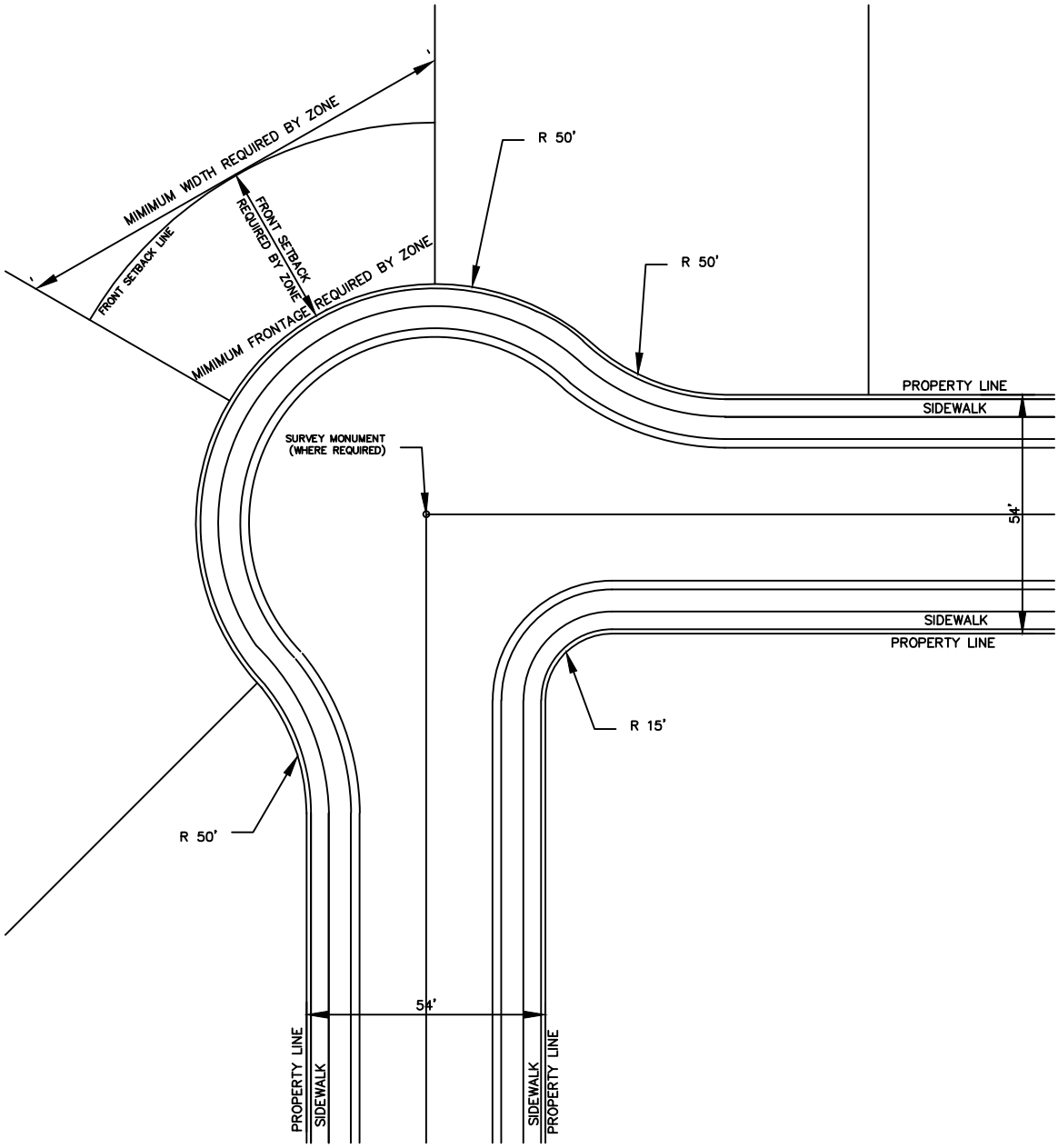

KNUCKLE DETAIL

N.T.S.

STATEMENT OF USE

THIS DOCUMENT AND ANY ILLUSTRATIONS HEREON ARE PROVIDED AS STANDARD CONSTRUCTION DETAILS WITHIN ALPINE CITY. DEVEATION FROM THIS DOCUMENT REQUIRES APPROVAL OF ALPINE CITY, ALPINE CITY CORPRTATION CAN NOT BE HELD LIABLE FOR MISSUSE OR CHANGES REGARDING THIS DOCUMENT.

REVISION

NO.		BY	APRL	DATE

ALPINE CITY
ESTABLISHED 1850

CAD FILE: E:\ENGINEERING\STANDARD DRAWINGS\2015 UPDATED\8 KNUCKLE DETAIL

KNUCKLE DETAIL

ALPINE CITY
20 NORTH MAIN
ALPINE, UT 84004

STANDARD DRAWING NUMBER: 8

PLOT SCALE:	N.T.S.
DRAWN BY:	BDB
DESIGN BY:	
CHECKED BY:	
ADOPTED DATE:	10/11/05

FRONT, REAR, AND SIDE YARDS

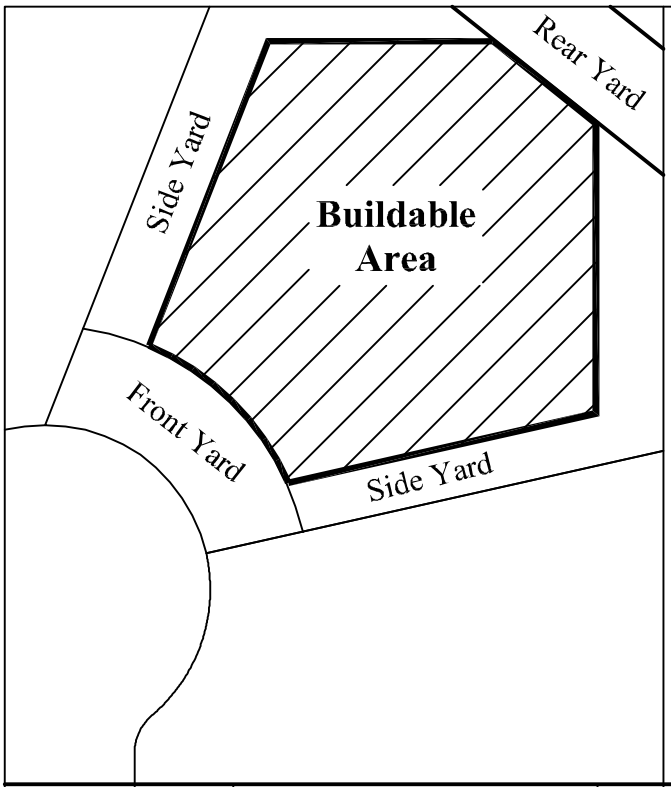

Figure A:
Cul-de-Sac
or
Irregular Shaped Lot

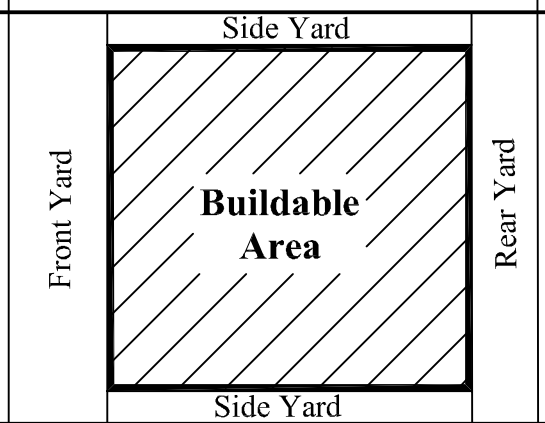

Figure B:
Interior Lot
(Typical)

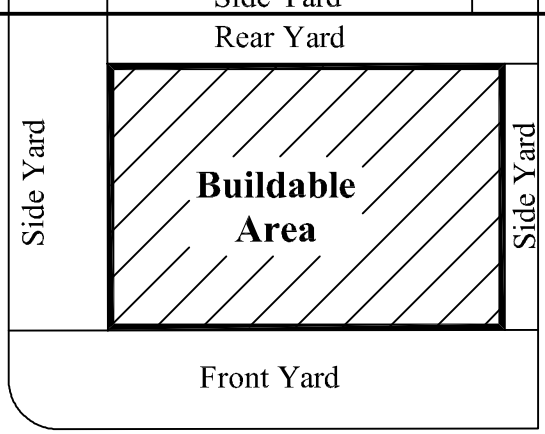

Figure C:
Corner Lot
(Typical)

STATEMENT OF USE

THIS DOCUMENT AND ANY ILLUSTRATIONS HEREON ARE PROVIDED AS STANDARD CONSTRUCTION DETAILS WITHIN ALPINE CITY. DEVEATION FROM THIS DOCUMENT REQUIRES APPROVAL OF ALPINE CITY, ALPINE CITY CORPRTATION CAN NOT BE HELD LIABLE FOR MISSUSE OR CHANGES REGARDING THIS DOCUMENT.

REVISION

NO.		BY	APRL	DATE

ALPINE CITY
ESTABLISHED 1850

CAD FILE: E:\ENGINEERING\STANDARD DRAWINGS\2015 UPDATED\9 SETBACKS

Standard Setbacks

ALPINE CITY
20 NORTH MAIN
ALPINE, UT 84004

STANDARD DRAWING NUMBER: 9

PLOT SCALE:	N.T.S.
DRAWN BY:	WJM
DESIGN BY:	
CHECKED BY:	
ADOPTED DATE:	4/14/04

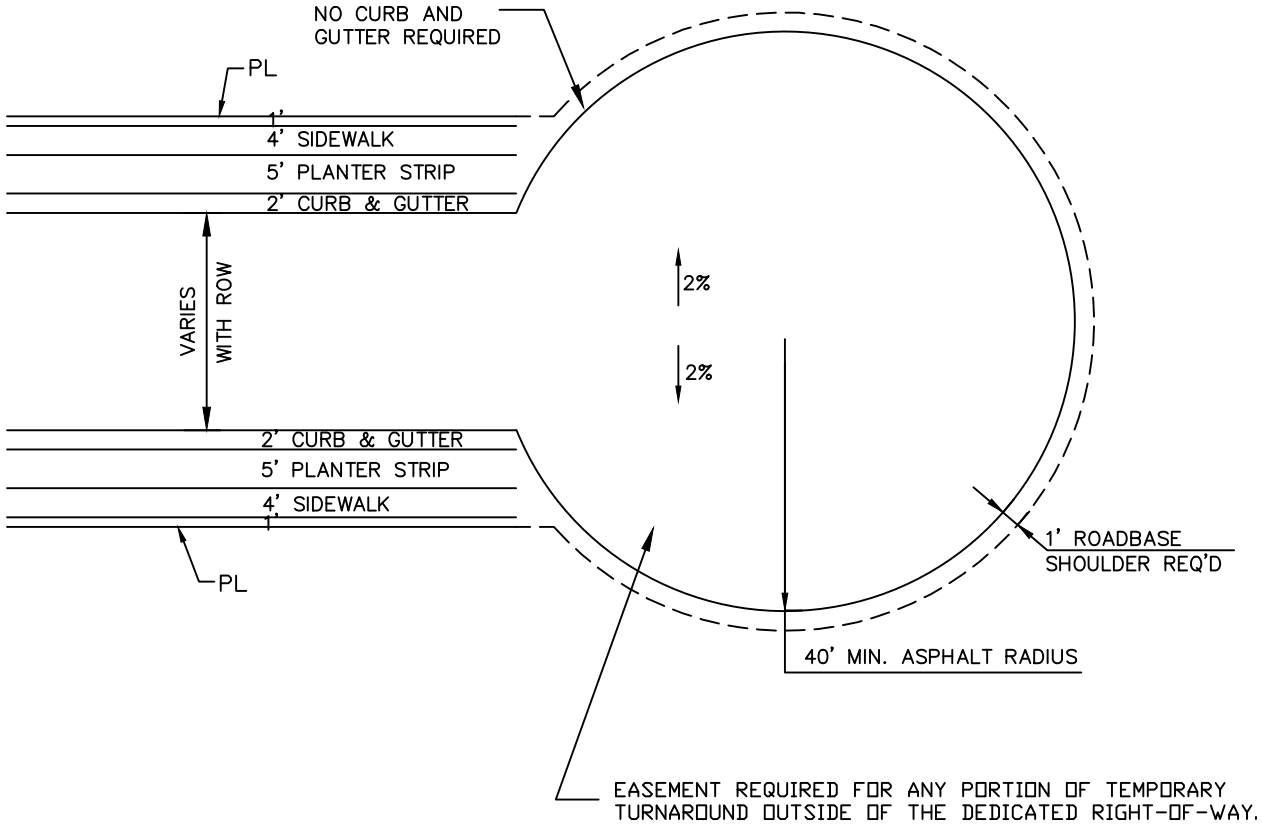

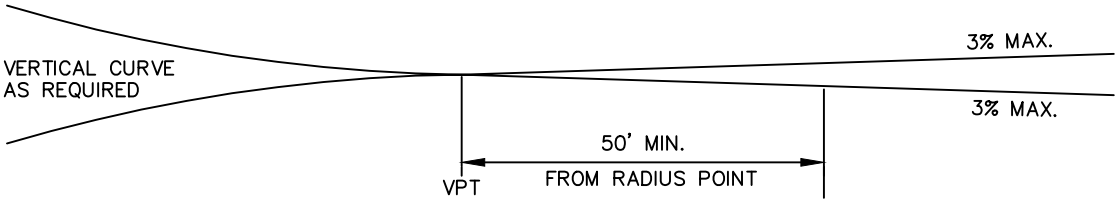

GENERAL CONSTRUCTION NOTES:

1. SUBGRADE SHALL CONFORM TO CITY CONSTRUCTION STANDARDS, SEE STREET CROSS SECTION DETAIL 1.
2. 8" MIN. CRUSHED GRAVEL BASE COURSE.
3. 3" MIN. COMPACTED PLANT MIX ASPHALT SURFACING.

TEMPORARY TURNAROUND

NTS

STATEMENT OF USE

THIS DOCUMENT AND ANY ILLUSTRATIONS HEREON ARE PROVIDED AS STANDARD CONSTRUCTION DETAILS WITHIN ALPINE CITY. DEVEATION FROM THIS DOCUMENT REQUIRES APPROVAL OF ALPINE CITY, ALPINE CITY CORPRTATION CAN NOT BE HELD LIABLE FOR MISSUSE OR CHANGES REGARDING THIS DOCUMENT.

REVISION

NO.		BY	APRL	DATE

ALPINE CITY
ESTABLISHED 1850

CAD FILE: E:\ENGINEERING\STANDARD DRAWINGS\2015 UPDATED (CURRENT)\10 TEMPORARY TURNAROUND

TEMPORARY TURNAROUND

ALPINE CITY
20 NORTH MAIN
ALPINE, UT 84004

STANDARD DRAWING NUMBER: 10

PLOT SCALE:	N.T.S.
DRAWN BY:	BDB
DESIGN BY:	
CHECKED BY:	
ADOPTED DATE:	10/18/05

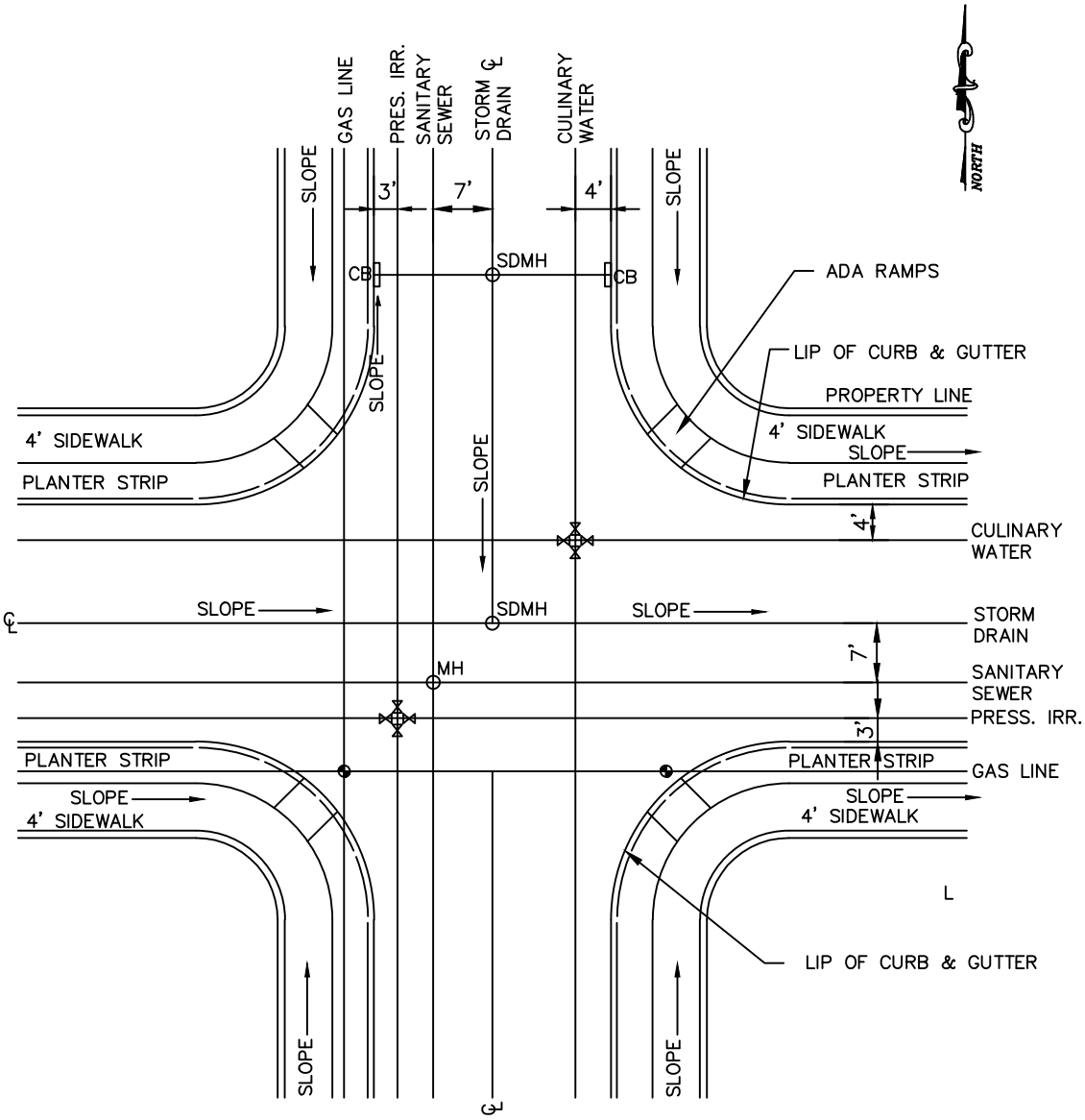

STANDARD STREET INTERSECTION AND UTILITY LOCATION

N.T.S.

STATEMENT OF USE

THIS DOCUMENT AND ANY ILLUSTRATIONS HEREON ARE PROVIDED AS STANDARD CONSTRUCTION DETAILS WITHIN ALPINE CITY. DEVEATION FROM THIS DOCUMENT REQUIRES APPROVAL OF ALPINE CITY, ALPINE CITY CORPRTATION CAN NOT BE HELD LIABLE FOR MISSUSE OR CHANGES REGARDING THIS DOCUMENT.

REVISION

NO.		BY	APRL	DATE

ALPINE CITY
ESTABLISHED 1850

CAD FILE: D:\ENGINEERING\STANDARD DRAWINGS\2005 UPDATED\11 INTERSECTION AND UTILITY LOCATION

STANDARD STREET INTERSECTION AND UTILITY LOCATION

ALPINE CITY
20 NORTH MAIN
ALPINE, UT 84004

STANDARD DRAWING NUMBER:	11
PLOT SCALE:	N.T.S.
DRAWN BY:	BDB
DESIGN BY:	
CHECKED BY:	
ADOPTED DATE:	10/13/05

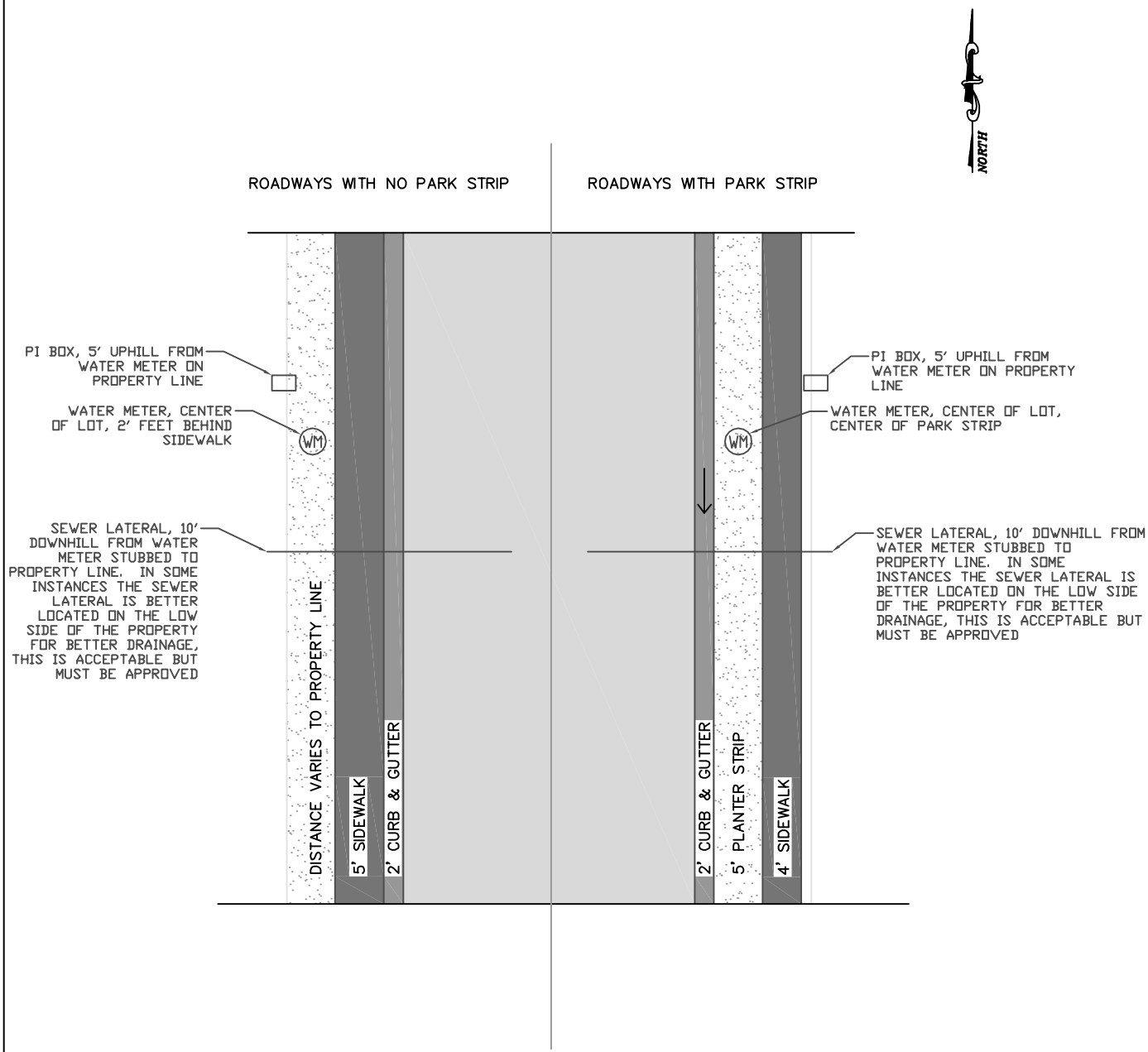

STANDARD LOT UTILITY LOCATIONS

N.T.S.

STATEMENT OF USE

THIS DOCUMENT AND ANY ILLUSTRATIONS HEREON ARE PROVIDED AS STANDARD CONSTRUCTION DETAILS WITHIN ALPINE CITY. DEVEATION FROM THIS DOCUMENT REQUIRES APPROVAL OF ALPINE CITY, ALPINE CITY CORPRTATION CAN NOT BE HELD LIABLE FOR MISSUSE OR CHANGES REGARDING THIS DOCUMENT.

REVISION

NO.		BY	APRL	DATE

ALPINE CITY
ESTABLISHED 1850

CAD FILE: B:\ENGINEERING\STANDARD DRAWINGS\2015 UPDATED\12 LOT UTILITY LOCATIONS

STANDARD LOT UTILITY LOCATIONS

ALPINE CITY
20 NORTH MAIN
ALPINE, UT 84004

STANDARD DRAWING NUMBER: 12

PLOT SCALE:	N.T.S.
DRAWN BY:	BDB
DESIGN BY:	
CHECKED BY:	
ADOPTED DATE:	10/13/05

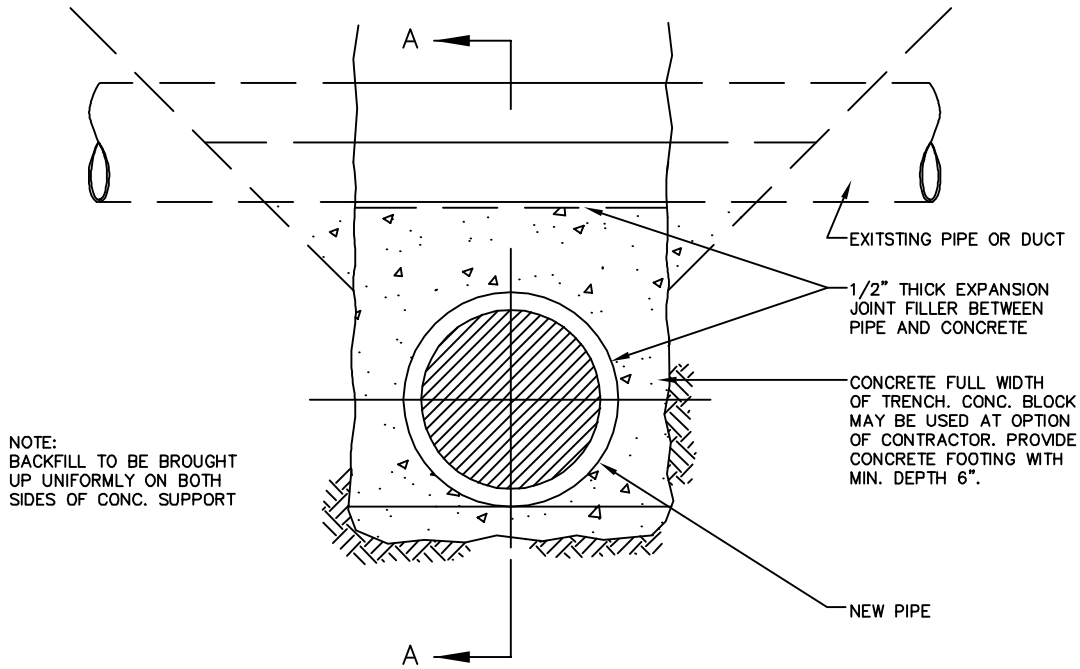

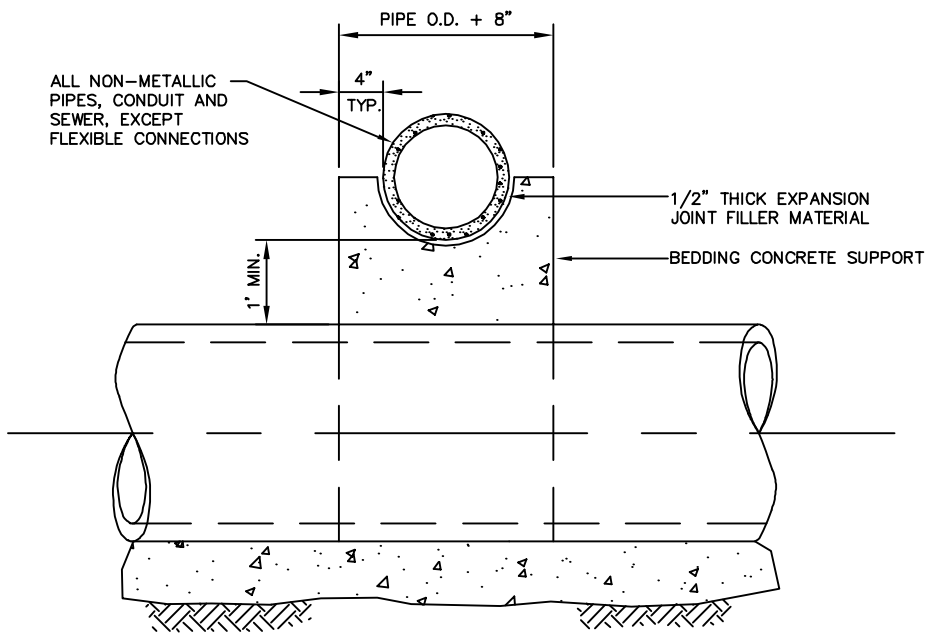

SECTION A-A

UTILITY CONFLICT

N.T.S.

STATEMENT OF USE

THIS DOCUMENT AND ANY ILLUSTRATIONS HEREON ARE PROVIDED AS STANDARD CONSTRUCTION DETAILS WITHIN ALPINE CITY. DEVEATION FROM THIS DOCUMENT REQUIRES APPROVAL OF ALPINE CITY, ALPINE CITY CORPRTATION CAN NOT BE HELD LIABLE FOR MISSUSE OR CHANGES REGARDING THIS DOCUMENT.

REVISION

NO.		BY	APRL	DATE

ALPINE CITY
ESTABLISHED 1850

CAD FILE: E:\ENGINEERING\STANDARD DRAWINGS\2015 UPDATED\13 UTILCF

UTILITY CONFLICT

ALPINE CITY
20 NORTH MAIN
ALPINE, UT 84004

STANDARD DRAWING NUMBER:	13
PLOT SCALE:	N.T.S.
DRAWN BY:	WJM
DESIGN BY:	
CHECKED BY:	
ADOPTED DATE:	4/14/04

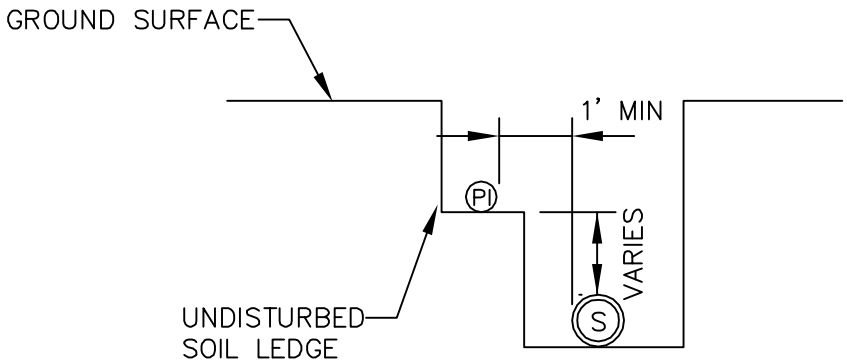

NOTE:
ALL PLUMBING PRACTICES SHALL CONFORM TO THE PLUMBING CODE ADOPTED BY ALPINE CITY

SEWER & PI LATERALS IN COMMON TRENCH

N.T.S.

STATEMENT OF USE

THIS DOCUMENT AND ANY ILLUSTRATIONS HEREON ARE PROVIDED AS STANDARD CONSTRUCTION DETAILS WITHIN ALPINE CITY. DEVEATION FROM THIS DOCUMENT REQUIRES APPROVAL OF ALPINE CITY, ALPINE CITY CORPRTATION CAN NOT BE HELD LIABLE FOR MISSUSE OR CHANGES REGARDING THIS DOCUMENT.

REVISION

NO.		BY	APRL	DATE

ALPINE CITY
ESTABLISHED 1850

CAD FILE: D:\ENGINEERING\STANDARD DRAWINGS\2010 UPDATED\14 UTILITIES IN SAME TRENCH

CITY UTILITY LATERALS IN SAME TRENCH

ALPINE CITY
20 NORTH MAIN
ALPINE, UT 84004

STANDARD DRAWING NUMBER: 14

PLOT SCALE:	N.T.S.
DRAWN BY:	WJM
DESIGN BY:	
CHECKED BY:	
ADOPTED DATE:	4/14/04

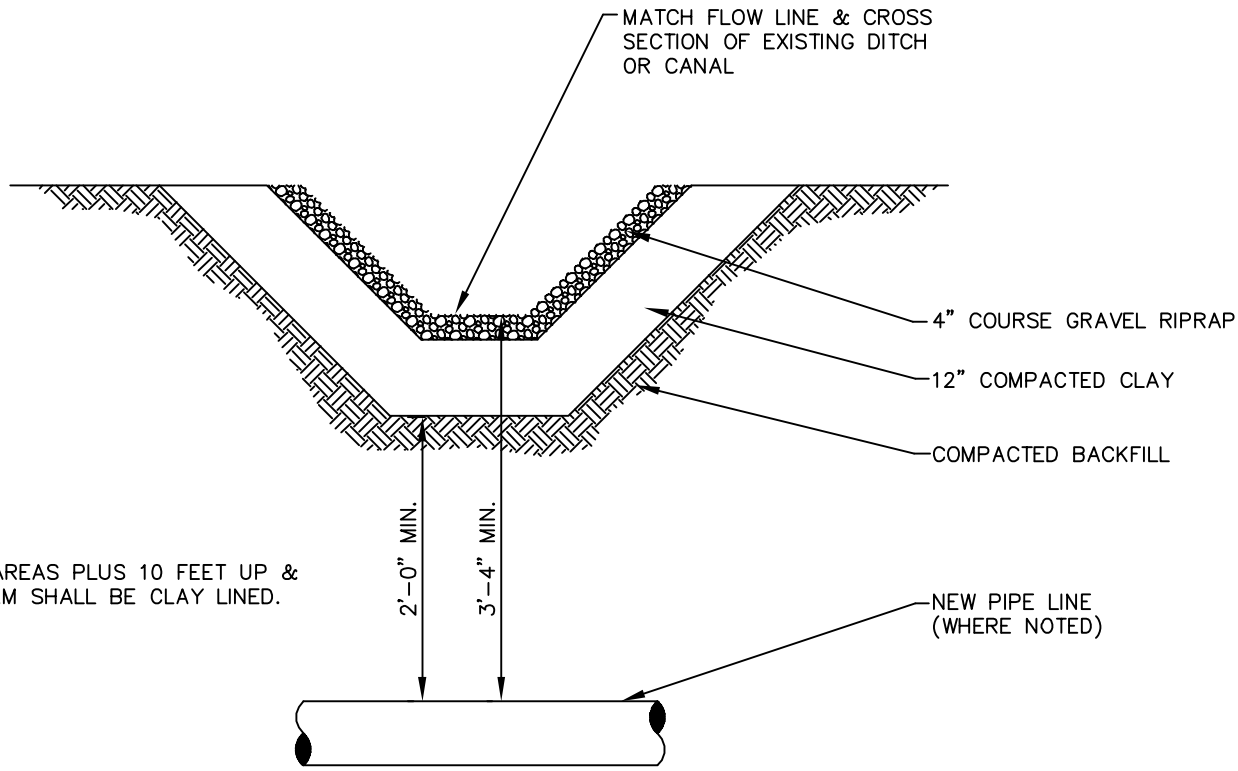

NOTE:
DISTURBED AREAS PLUS 10 FEET UP & DOWN STREAM SHALL BE CLAY LINED.

DITCH CROSSING

N.T.S.

STATEMENT OF USE

THIS DOCUMENT AND ANY ILLUSTRATIONS HEREON ARE PROVIDED AS STANDARD CONSTRUCTION DETAILS WITHIN ALPINE CITY. DEVEATION FROM THIS DOCUMENT REQUIRES APPROVAL OF ALPINE CITY, ALPINE CITY CORPRTATION CAN NOT BE HELD LIABLE FOR MISSUSE OR CHANGES REGARDING THIS DOCUMENT.

REVISION

NO.		BY	APRL	DATE

ALPINE CITY
ESTABLISHED 1850

CAD FILE: E:\ENGINEERING\STANDARD DRAWINGS\2015 UPDATED\15 DITCH CROSSING

DITCH CROSSING

ALPINE CITY
20 NORTH MAIN
ALPINE, UT 84004

STANDARD DRAWING NUMBER:	15
PLOT SCALE:	N.T.S.
DRAWN BY:	WJM
DESIGN BY:	
CHECKED BY:	
ADOPTED DATE:	4/14/04

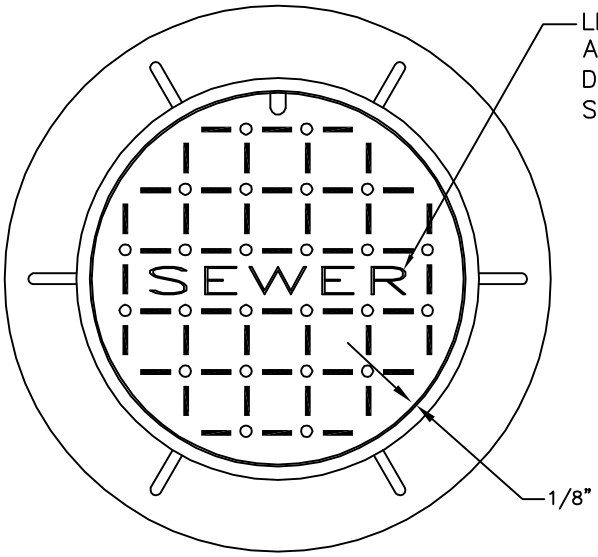

PLAN OF COVER AND RING

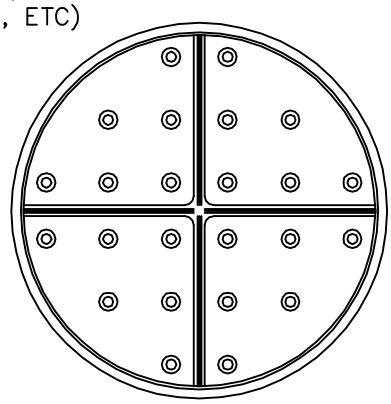

BOTTOM VIEW OF COVER

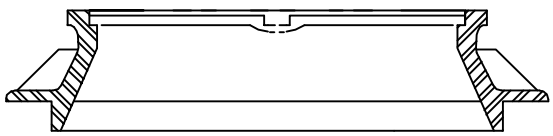

SECTIONS

D&L A-1180 OR APPROVED EQUAL

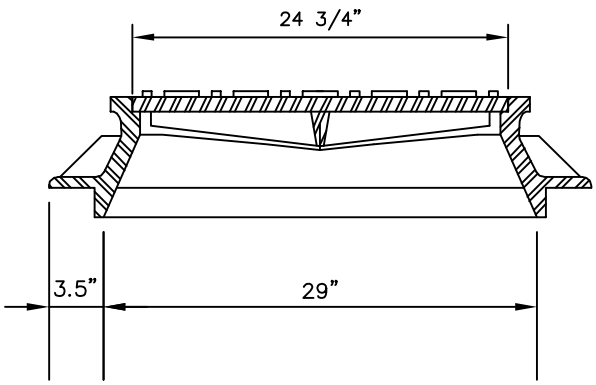

HEAVY DUTY, 400 LB. MINIMUM, MANHOLE RING AND COVER

N.T.S.

STATEMENT OF USE

THIS DOCUMENT AND ANY ILLUSTRATIONS HEREON ARE PROVIDED AS STANDARD CONSTRUCTION DETAILS WITHIN ALPINE CITY. DEVEATION FROM THIS DOCUMENT REQUIRES APPROVAL OF ALPINE CITY, ALPINE CITY CORPRTATION CAN NOT BE HELD LIABLE FOR MISSUSE OR CHANGES REGARDING THIS DOCUMENT.

REVISION

NO.		BY	APRL	DATE

ALPINE CITY
ESTABLISHED 1850

CAD FILE: D:\ENGINEERING\STANDARD DRAWINGS\2015 UPDATED\16 TYPICAL MANHOLE RING & COVER

MANHOLE RING & COVER (typical)

ALPINE CITY
20 NORTH MAIN
ALPINE, UT 84004

STANDARD DRAWING NUMBER:	16
PLOT SCALE:	N.T.S.
DRAWN BY:	WJM
DESIGN BY:	
CHECKED BY:	
ADOPTED DATE:	4/14/04

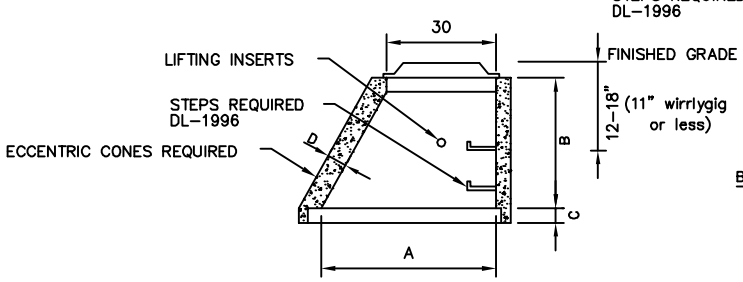

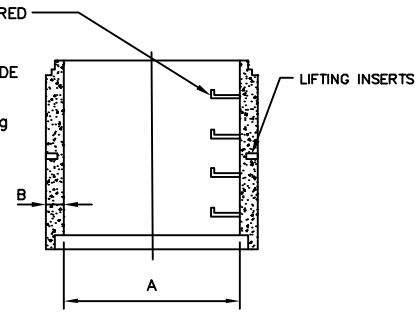

SIZE A (INCHES)	HEIGHT B (INCHES)	FLANGE C (INCHES)	WALL D (INCHES)	WEIGHT (LBS. EA.)
48	36	4	5	2720
60	39	6	6	4300

USE 5' DIA. MIN. FOR ALL PIPE 14" & LARGER USE 4' MIN. DIA. FOR ALL PIPE UP TO AND INCLUDING 12" DIA. UNLESS 3 OR ENTER THE MANHOLE. FOR ALL MANHOLES 15' OR DEPTH FROM RIM TO INV., USE 5' DIA. MANHOLE.

SIZE A (INCHES)	WALL B (INCHES)	WEIGHT (LBS. EA.)
48	5	900
60	6	1380

DROP PIPE INSTALLED IN CONCRETE

*NOTE:
MINIMUM AS DIRECTED BY CITY ENGINEER

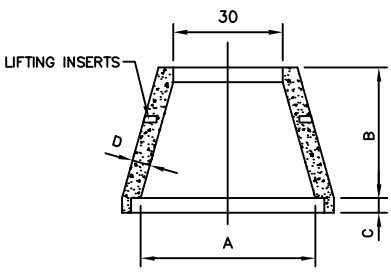

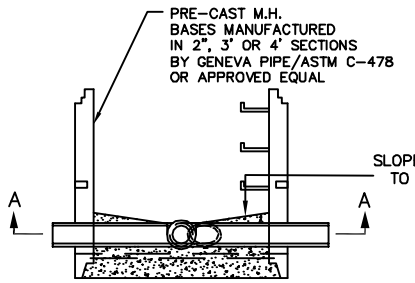

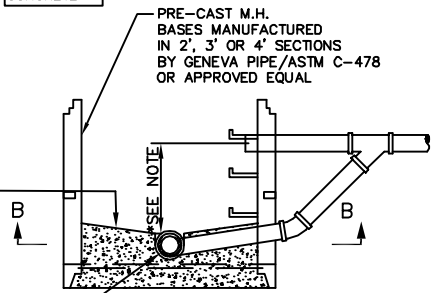

PRESEAL OR FORSHEDA GASKET SYSTEM. LINE AND GRADE AS SHOWN ON PROJECT PLAN.

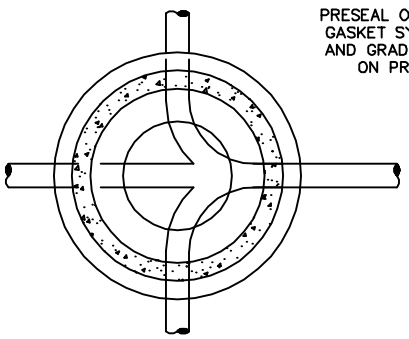

SECTION A–A

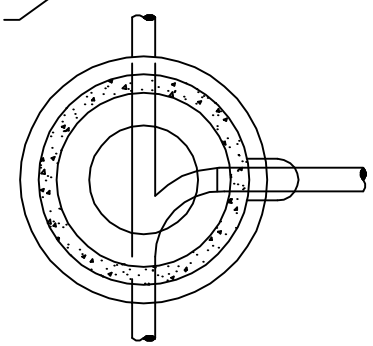

SECTION B–B

TYPICAL JUNCTION MANHOLE

N.T.S.

TYPICAL DROP MANHOLE

N.T.S.

NOTE: USE OF DROP MANHOLES REQUIRES APPROVAL OF CITY ENGINEER AND PUBLIC WORKS DIRECTOR. FOR ALL OTHER SPECIFICATIONS, SEE APWA.

STATEMENT OF USE

THIS DOCUMENT AND ANY ILLUSTRATIONS HEREON ARE PROVIDED AS STANDARD CONSTRUCTION DETAILS WITHIN ALPINE CITY. DEVEATION FROM THIS DOCUMENT REQUIRES APPROVAL OF ALPINE CITY, ALPINE CITY CORPRTATION CAN NOT BE HELD LIABLE FOR MISSUSE OR CHANGES REGARDING THIS DOCUMENT.

REVISION

NO.		BY	APRL	DATE

ALPINE CITY
ESTABLISHED 1850

CAD FILE: E:\ENGINEERING\STANDARD DRAWINGS\2015 UPDATED (CURRENT)\17 SEWER TYPICAL MANHOLES

SEWER MANHOLE (TYPICAL)

ALPINE CITY
20 NORTH MAIN
ALPINE, UT 84004

STANDARD DRAWING NUMBER:	17
PLOT SCALE:	N.T.S.
DRAWN BY:	WJM
DESIGN BY:	
CHECKED BY:	
ADOPTED DATE:	4/14/04

NOTES:

1. A CLEANOUT IS REQUIRED NEXT TO THE BUILDING.
2. ADDITIONAL CLEANOUTS REQUIRED BETWEEN THE BUILDING AND SEWER MAIN AT MAXIMUM 100 FOOT INTERVALS.
3. THE COMBO SHALL CONSIST OF CAST IRON, ABS MATERIAL (OR WHITE SCH40 DWV) FOR RISER.
4. FERNCO COUPLERS (AS SHOWN) SHALL BE USED WHEN CONNECTING CAST IRON TO RISER OR SDR-35 LATERAL PIPE.
5. ALL CLEANOUTS SHALL HAVE CAST IRON CAPS.
6. ALL SEWER LATERALS SHALL BE SDR-35 PIPE, BEING LAID WITH THE BELL END OF THE PIPE IN THE UP HILL DIRECTION.
7. ALL SEWER LATERALS SHALL BE BEDDED WITH 3/4" MINUS GRAVEL.
8. BACKFILL MATERIAL SHALL BE ENGINEERED FILL WITHIN CITY RIGHT OF WAYS, AS CLASSIFIED IN ALPINE CITY STANDARDS AND SPECIFICATIONS.
9. BACKFILL MATERIAL AROUND PIPE SHALL BE COMPACTED TO 95% OF DENSITY AS MEASURED BY AASHTO T-99.
10. SEWER LATERAL MUST BE INSPECTED BY AN AUTHORIZED REPRESENTATIVE OF THE CITY PRIOR TO BACKFILLING TRENCH.
11. A TIE SKETCH SHOWING THE LOCATION OF ALL SEWER LATERALS MUST BE SUBMITTED TO THE CITY.
12. THE CITY SHALL BE NOTIFIED 24 HOURS PRIOR TO WHEN A SEWER LATERAL INSPECTION IS NEEDED.
13. ALL APPROPRIATE EXCAVATION PERMITS MUST BE OBTAINED FROM THE CITY AND OTHER AGENCY PRIOR TO ANY EXCAVATION.
14. ALL APPROPRIATE IMPACT FEES MUST BE PAID PRIOR TO CONNECTING TO THE SEWER.
15. MARK END OF LATERAL STUB WITH 2x4 POST PAINTED GREEN. ALL OTHER MARKERS MUST BE PRE-APPROVED PRIOR TO USE.

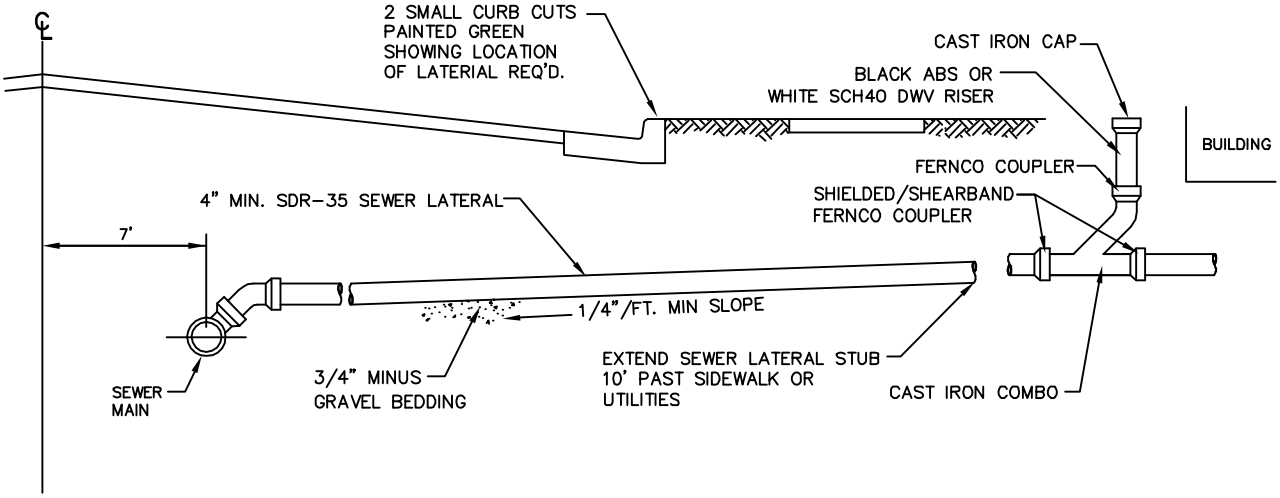

TYPICAL SEWER SERVICE CONN.

N.T.S.

STATEMENT OF USE

THIS DOCUMENT AND ANY ILLUSTRATIONS HEREON ARE PROVIDED AS STANDARD CONSTRUCTION DETAILS WITHIN ALPINE CITY. DEVEATION FROM THIS DOCUMENT REQUIRES APPROVAL OF ALPINE CITY, ALPINE CITY CORPRTATION CAN NOT BE HELD LIABLE FOR MISSUSE OR CHANGES REGARDING THIS DOCUMENT.

REVISION

NO.		BY	APRL	DATE

ALPINE CITY
ESTABLISHED 1850

CAD FILE:

TYPICAL SEWER SERVICE CONN.

ALPINE CITY
20 NORTH MAIN
ALPINE, UT 84004

STANDARD DRAWING NUMBER: 17a

PLOT SCALE:	N.T.S.
DRAWN BY:	WJM
DESIGN BY:	
CHECKED BY:	
ADOPTED DATE:	4/14/04

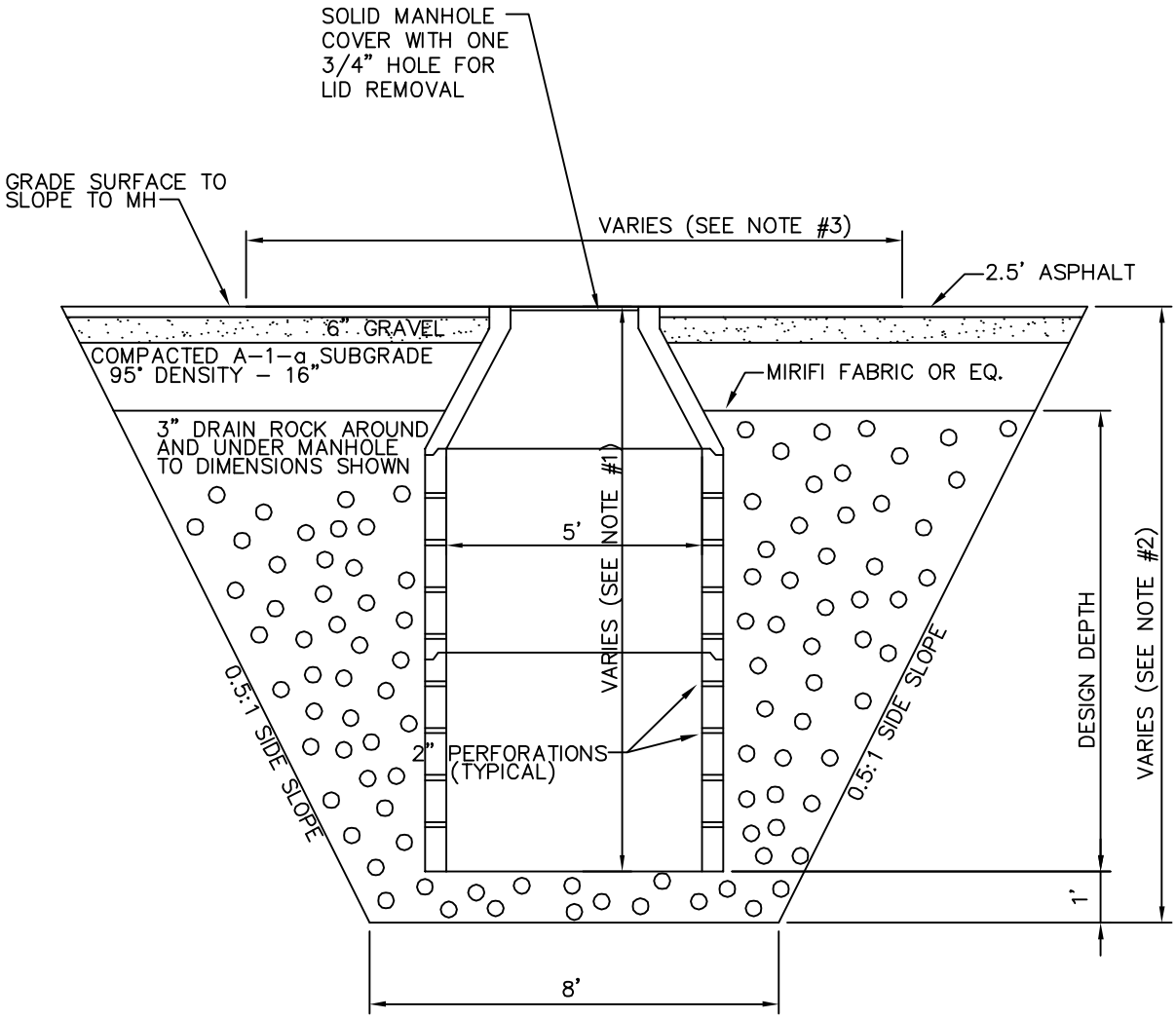

NOTES:
#1. DESIGN DEPTH + 2'
#2. DESIGN DEPTH + 3'
#3. DESIGN DEPTH + 11'

STORM DRAINAGE SUMP

N.T.S.

STATEMENT OF USE

THIS DOCUMENT AND ANY ILLUSTRATIONS HEREON ARE PROVIDED AS STANDARD CONSTRUCTION DETAILS WITHIN ALPINE CITY. DEVEATION FROM THIS DOCUMENT REQUIRES APPROVAL OF ALPINE CITY, ALPINE CITY CORPRTATION CAN NOT BE HELD LIABLE FOR MISSUSE OR CHANGES REGARDING THIS DOCUMENT.

REVISION

NO.		BY	APRL	DATE

ALPINE CITY
ESTABLISHED 1850

CAD FILE: E:\ENGINEERING\STANDARD DRAWINGS\2015 UPDATED (CURRENT)\18 STMSUMP

TYPICAL STORM DRAINAGE SUMP

ALPINE CITY
20 NORTH MAIN
ALPINE, UT 84004

STANDARD DRAWING NUMBER:	18
PLOT SCALE:	N.T.S.
DRAWN BY:	WJM
DESIGN BY:	
CHECKED BY:	
ADOPTED DATE:	4/14/04

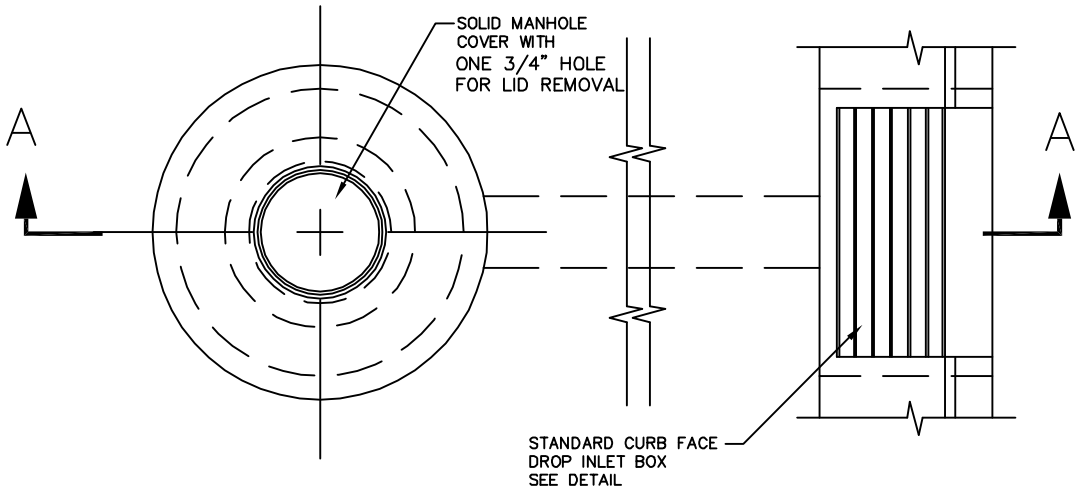

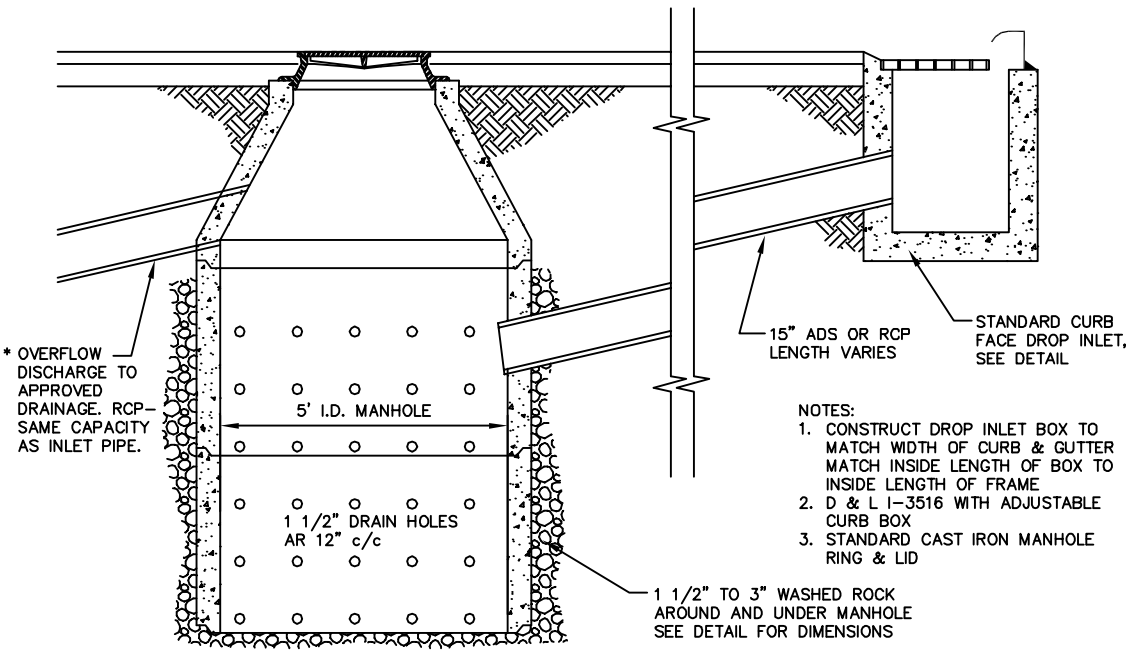

NOTES:
1. CONSTRUCT DROP INLET BOX TO MATCH WIDTH OF CURB & GUTTER MATCH INSIDE LENGTH OF BOX TO INSIDE LENGTH OF FRAME
2. D & L I-3516 WITH ADJUSTABLE CURB BOX
3. STANDARD CAST IRON MANHOLE RING & LID

* MAY BE REQ'D BY CITY ENGINEER

SECTION A-A

SUMP DISPOSAL

N.T.S.

NOTE: ONLY ALLOWED IN CERTAIN CIRCUMSTANCES. PRE-TREATMENT REQ'D

STATEMENT OF USE

THIS DOCUMENT AND ANY ILLUSTRATIONS HEREON ARE PROVIDED AS STANDARD CONSTRUCTION DETAILS WITHIN ALPINE CITY. DEVEATION FROM THIS DOCUMENT REQUIRES APPROVAL OF ALPINE CITY, ALPINE CITY CORPRTATION CAN NOT BE HELD LIABLE FOR MISSUSE OR CHANGES REGARDING THIS DOCUMENT.

REVISION

NO.		BY	APRL	DATE

ALPINE CITY
ESTABLISHED 1850

CAD FILE: E:\ENGINEERING\STANDARD DRAWINGS\2015 UPDATED\19 SMPDISP

SUMP DISPOSAL
(Typical)

ALPINE CITY
20 NORTH MAIN
ALPINE, UT 84004

STANDARD DRAWING NUMBER:	19
PLOT SCALE:	N.T.S.
DRAWN BY:	WJM
DESIGN BY:	
CHECKED BY:	
ADOPTED DATE:	4/14/04

NOTE:
#4 REBAR SPACED AT
A MINIMUM OF 12" O.C. HORIZ.
AND 8" O.C. VERTICAL.
14" OVERLAP OR REBAR
REQUIRED.

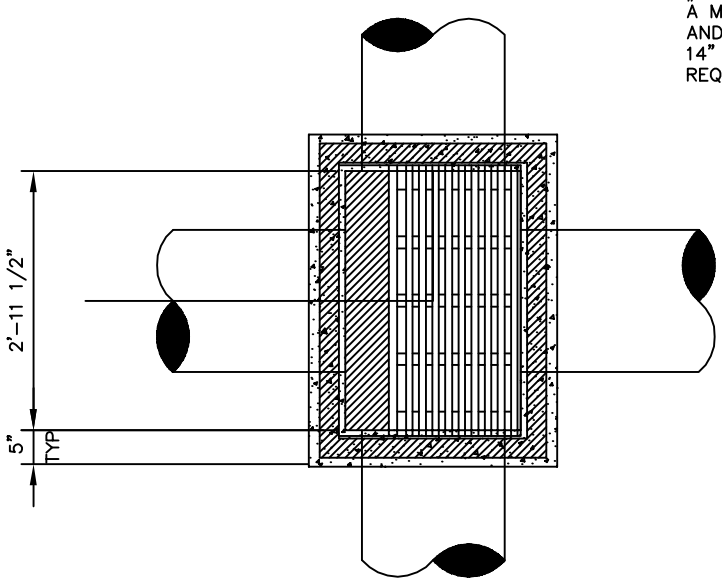

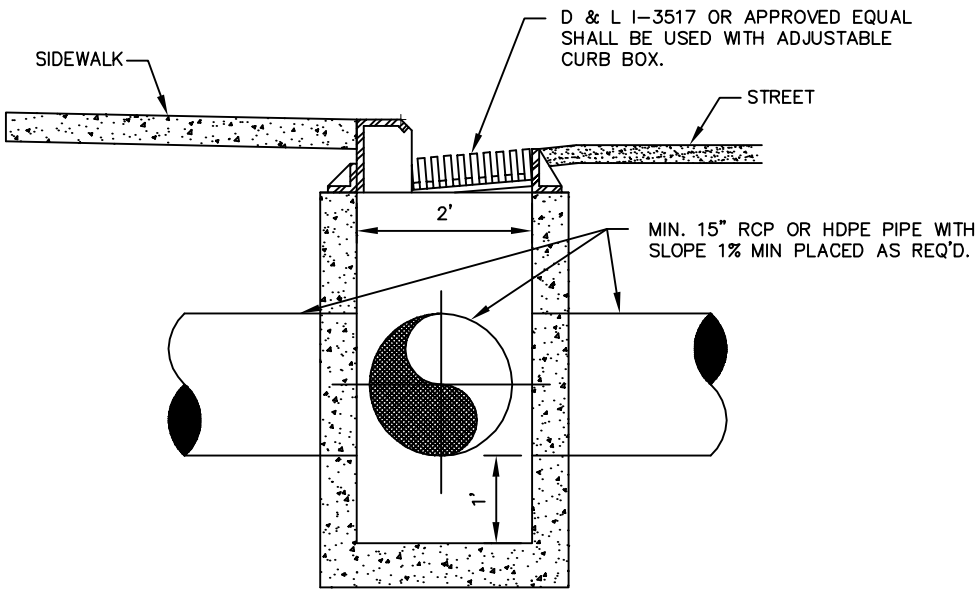

CURB FACE DROP INLET BOX

N.T.S.

STATEMENT OF USE

THIS DOCUMENT AND ANY ILLUSTRATIONS HEREON ARE PROVIDED AS STANDARD CONSTRUCTION DETAILS WITHIN ALPINE CITY. DEVEATION FROM THIS DOCUMENT REQUIRES APPROVAL OF ALPINE CITY, ALPINE CITY CORPRTATION CAN NOT BE HELD LIABLE FOR MISSUSE OR CHANGES REGARDING THIS DOCUMENT.

REVISION

NO.		BY	APRL	DATE

ALPINE CITY
ESTABLISHED 1850

CAD FILE: E:\ENGINEERING\STANDARD DRAWINGS\2015 UPDATED\20 DROPINLT

CURB FACE DROP INLET BOX (Typical)

ALPINE CITY
20 NORTH MAIN
ALPINE, UT 84004

STANDARD DRAWING NUMBER:	20
PLOT SCALE:	N.T.S.
DRAWN BY:	WJM
DESIGN BY:	
CHECKED BY:	
ADOPTED DATE:	4/14/04

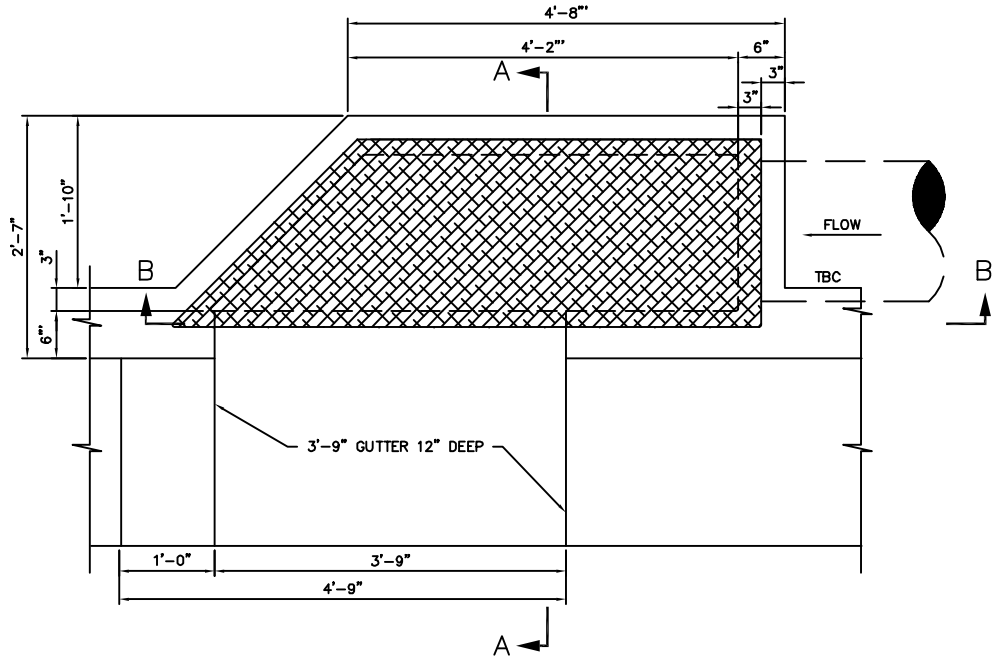

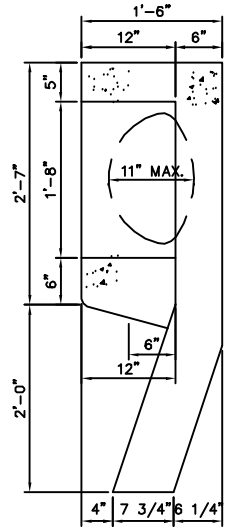

SECTION A-A

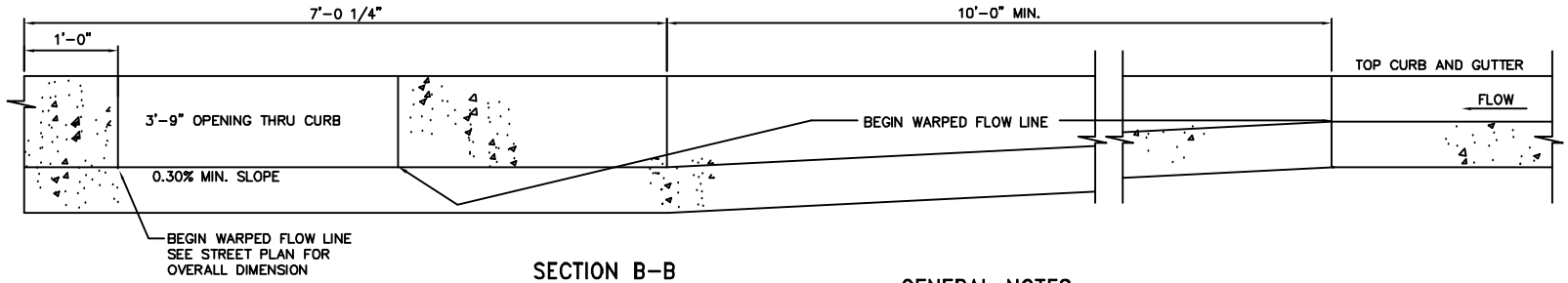

SECTION B-B

GENERAL NOTES

1. ALL MATERIALS, CONSTRUCTION, AND WORKMANSHIP SHALL BE IN ACCORDANCE WITH ALPINE CITY SPECIFICATIONS AND AS DIRECTED BY THE ALPINE CITY ENGINEER OR HIS REPRESENT.
2. ALL CONCRETE TO BE 4000 P.S.I. @ 28 DAYS.
3. UNDER CONDITIONS WHERE PIPE SIZE, PIPE TYPE, OR EARTH COVER IS CRITICAL USE MODIFIED OUTLET BOX.
4. 1/4" PLATE SHALL BE PLACED ON THE OULET AS A COVER. THE PLAT SHALL BE PAINTED GREY

DIPSTONE OUTLET

N.T.S.

STATEMENT OF USE

THIS DOCUMENT AND ANY ILLUSTRATIONS HEREON ARE PROVIDED AS STANDARD CONSTRUCTION DETAILS WITHIN ALPINE CITY. DEVEATION FROM THIS DOCUMENT REQUIRES APPROVAL OF ALPINE CITY, ALPINE CITY CORPRTATION CAN NOT BE HELD LIABLE FOR MISSUSE OR CHANGES REGARDING THIS DOCUMENT.

REVISION

NO.	BY	DATE
	APRIL	

ALPINE CITY
ESTABLISHED 1850

CAD FILE: E:\ENGINEERING\STANDARD DRAWINGS\2015 UPDATED\21 DIPSTONE OUTLET

DIPSTONE OUTLET

ALPINE CITY
20 NORTH MAIN
ALPINE, UT 84004

STANDARD DRAWING NUMBER: 21

PLOT SCALE:	N.T.S.
DRAWN BY:	WJM
DESIGN BY:	
CHECKED BY:	
ADOPTED DATE:	4/1/04

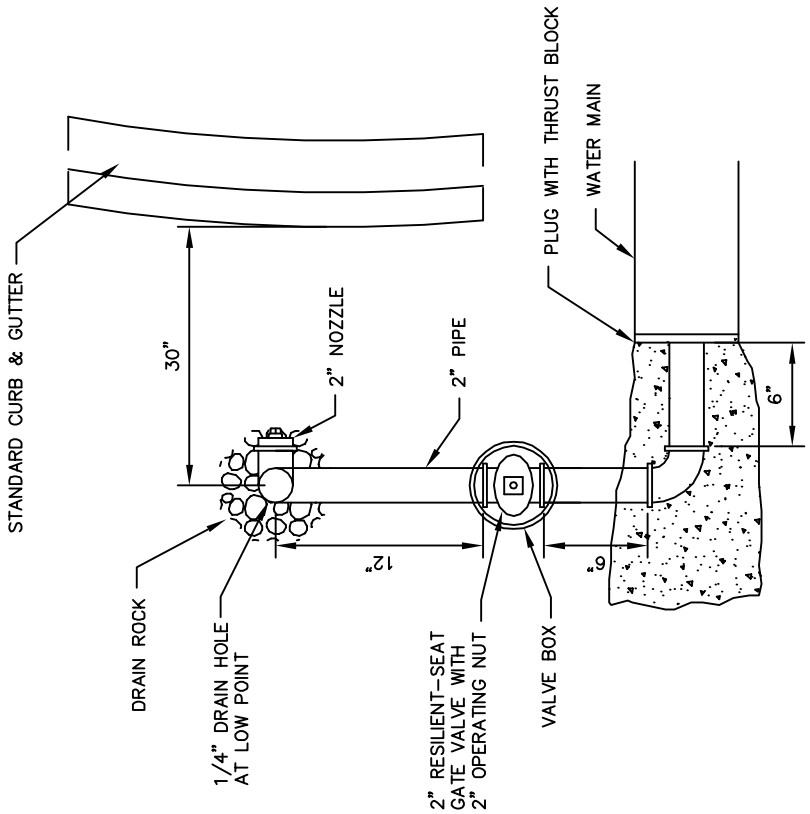

PLAN VIEW

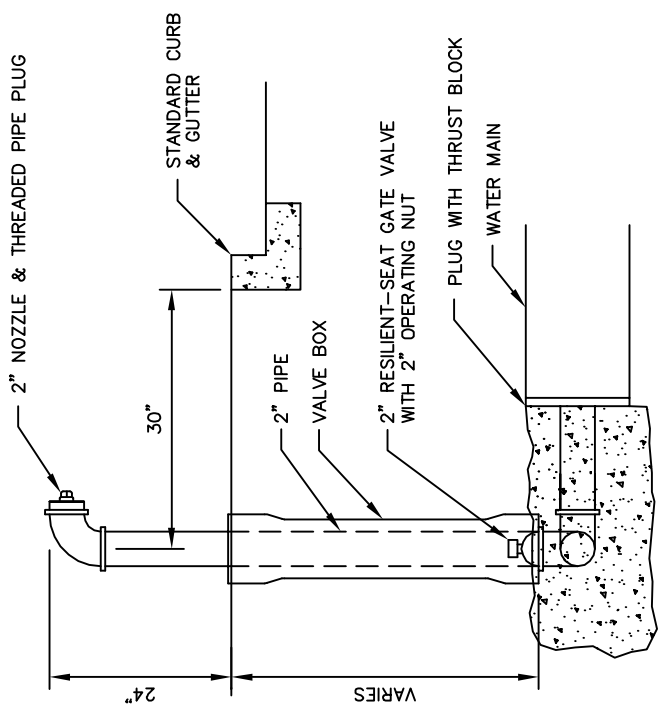

PROFILE

FLUSH VALVE

N.T.S.

STATEMENT OF USE

THIS DOCUMENT AND ANY ILLUSTRATIONS HEREON ARE PROVIDED AS STANDARD CONSTRUCTION DETAILS WITHIN ALPINE CITY. DEVEATION FROM THIS DOCUMENT REQUIRES APPROVAL OF ALPINE CITY, ALPINE CITY CORPRTATION CAN NOT BE HELD LIABLE FOR MISSUSE OR CHANGES REGARDING THIS DOCUMENT.

REVISION

NO.		BY	APRL	DATE

ALPINE CITY
ESTABLISHED 1850

CAD FILE: E:\ENGINEERING\STANDARD DRAWINGS\2015 UPDATED\22 FLUSHVAL

FLUSH VALVE (Typical)

ALPINE CITY
20 NORTH MAIN
ALPINE, UT 84004

STANDARD DRAWING NUMBER:	22
PLOT SCALE:	N.T.S.
DRAWN BY:	WJM
DESIGN BY:	
CHECKED BY:	
ADOPTED DATE:	4/14/04

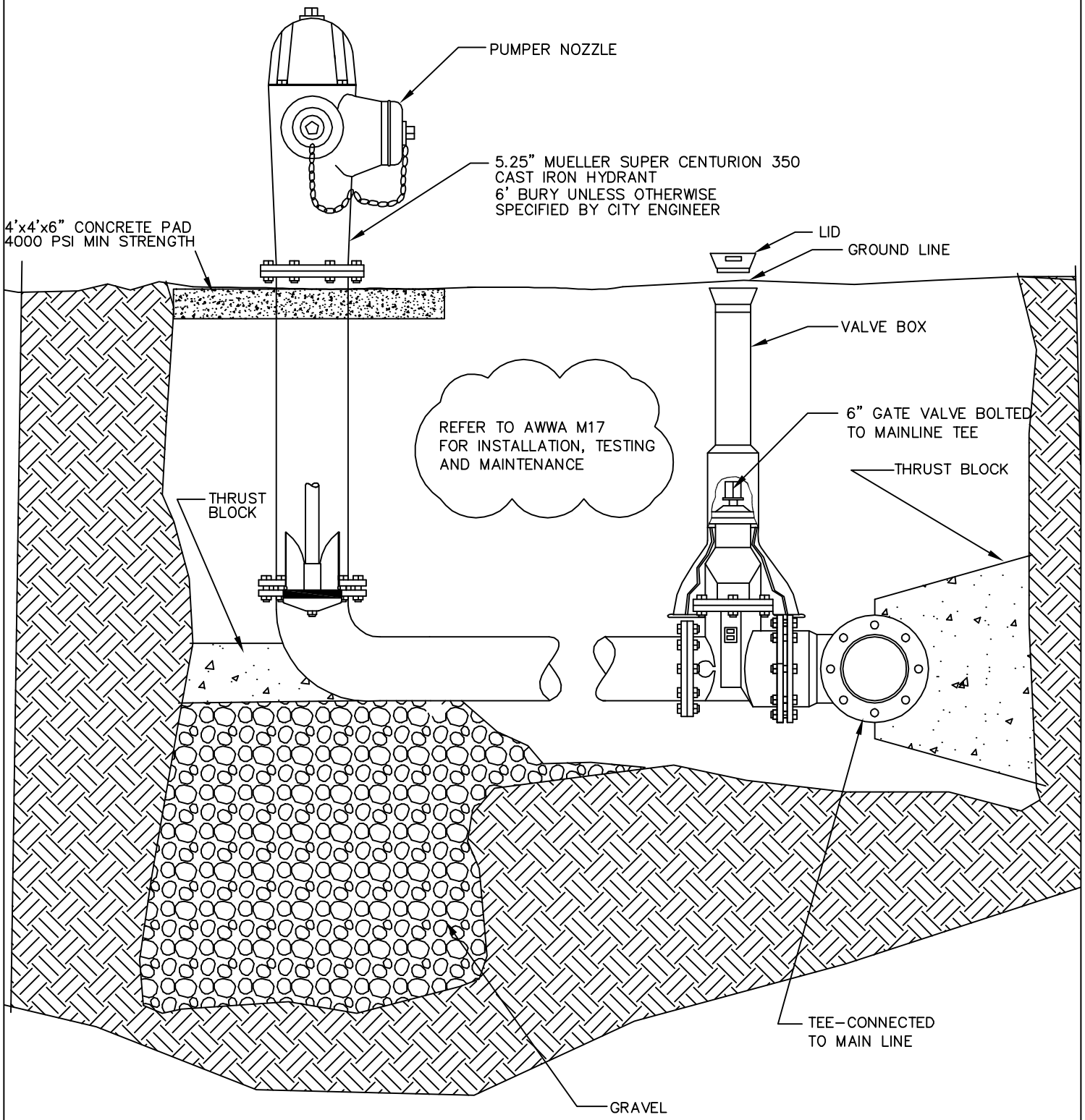

STANDARD FIRE HYDRANT DETAIL

N.T.S.

STATEMENT OF USE

THIS DOCUMENT AND ANY ILLUSTRATIONS HEREON ARE PROVIDED AS STANDARD CONSTRUCTION DETAILS WITHIN ALPINE CITY. DEVEATION FROM THIS DOCUMENT REQUIRES APPROVAL OF ALPINE CITY, ALPINE CITY CORPRTATION CAN NOT BE HELD LIABLE FOR MISSUSE OR CHANGES REGARDING THIS DOCUMENT.

REVISION

NO.		BY	APRL	DATE

ALPINE CITY
ESTABLISHED 1850

CAD FILE: \engineering\standard drawings\2015 details\Hyd 18.dwg

TYPICAL FIRE HYDRANT

ALPINE CITY
20 NORTH MAIN
ALPINE, UT 84004

STANDARD DRAWING NUMBER: 23

PLOT SCALE:	N.T.S.
DRAWN BY:	WJM
DESIGN BY:	
CHECKED BY:	
ADOPTED DATE:	4/14/04

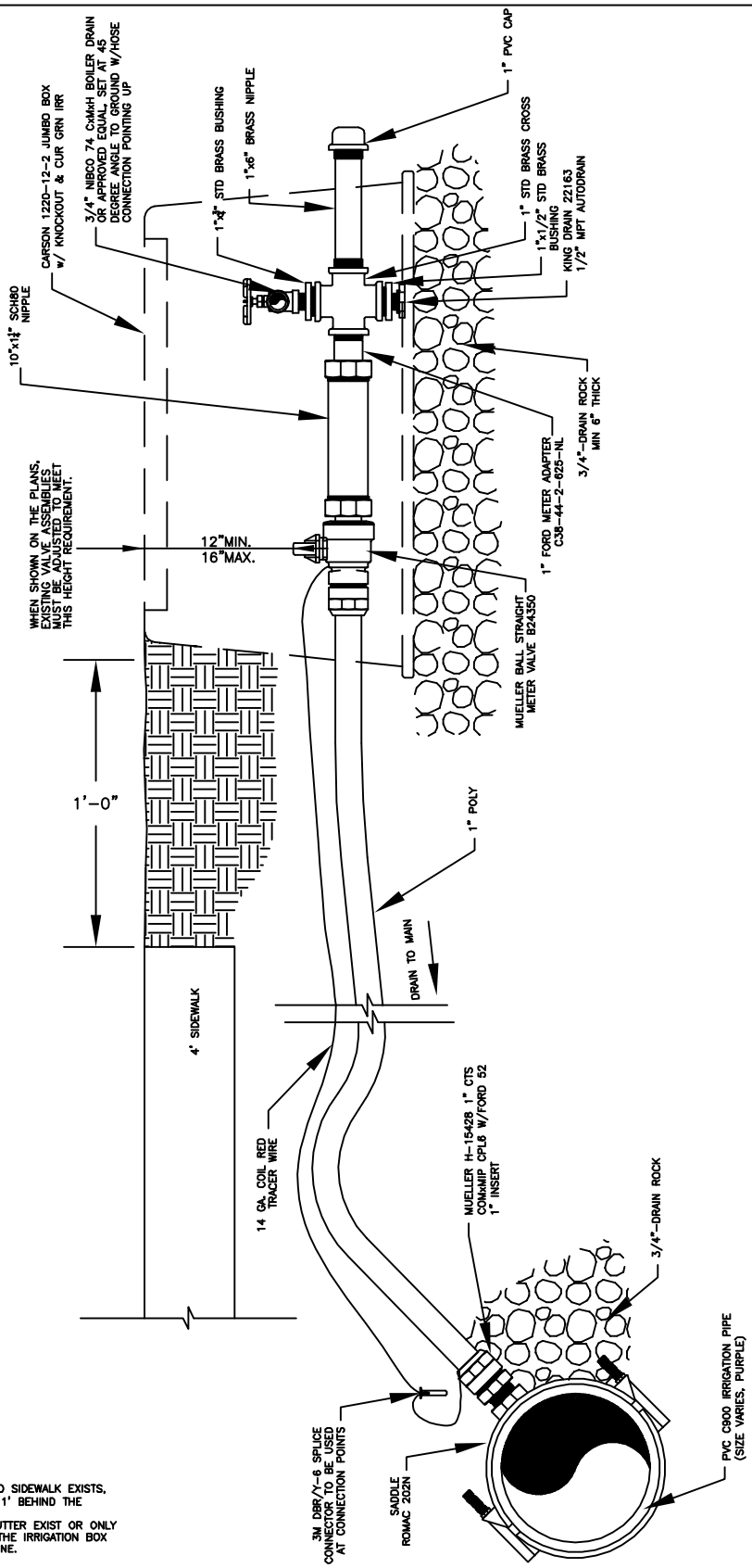

NOTES:

1. WHERE COMBINATION CURB, GUTTER, AND SIDEWALK EXISTS, THE IRRIGATION BOX SHALL BE PLACED 1' BEHIND THE SIDEWALK.
   IN LOCATIONS, WHERE NO CURB AND GUTTER EXIST OR ONLY CURB AND GUTTER WITHOUT SIDEWALK, THE IRRIGATION BOX SHALL BE PLACED ON THE PROPERTY LINE.

STATEMENT OF USE

THIS DOCUMENT AND ANY ILLUSTRATIONS HEREON ARE PROVIDED AS STANDARD CONSTRUCTION DETAILS WITHIN ALPINE CITY. DEVEATION FROM THIS DOCUMENT REQUIRES APPROVAL OF ALPINE CITY, ALPINE CITY CORPRTATION CAN NOT BE HELD LIABLE FOR MISSUSE OR CHANGES REGARDING THIS DOCUMENT.

REVISION

NO.		BY	APRL	DATE

ALPINE CITY
ESTABLISHED 1850

CAD FILE: \Engineering\Standard Drawings\2015\PI CONNECTION 8K.dwg

Pressurized Irrigation Distribution System

ALPINE CITY
20 NORTH MAIN
ALPINE, UT 84004

STANDARD DRAWING NUMBER: 24

PLOT SCALE:	N.T.S.
DRAWN BY:	B.D.B.
DESIGN BY:	
CHECKED BY:	
ADOPTED DATE:	8/10/05

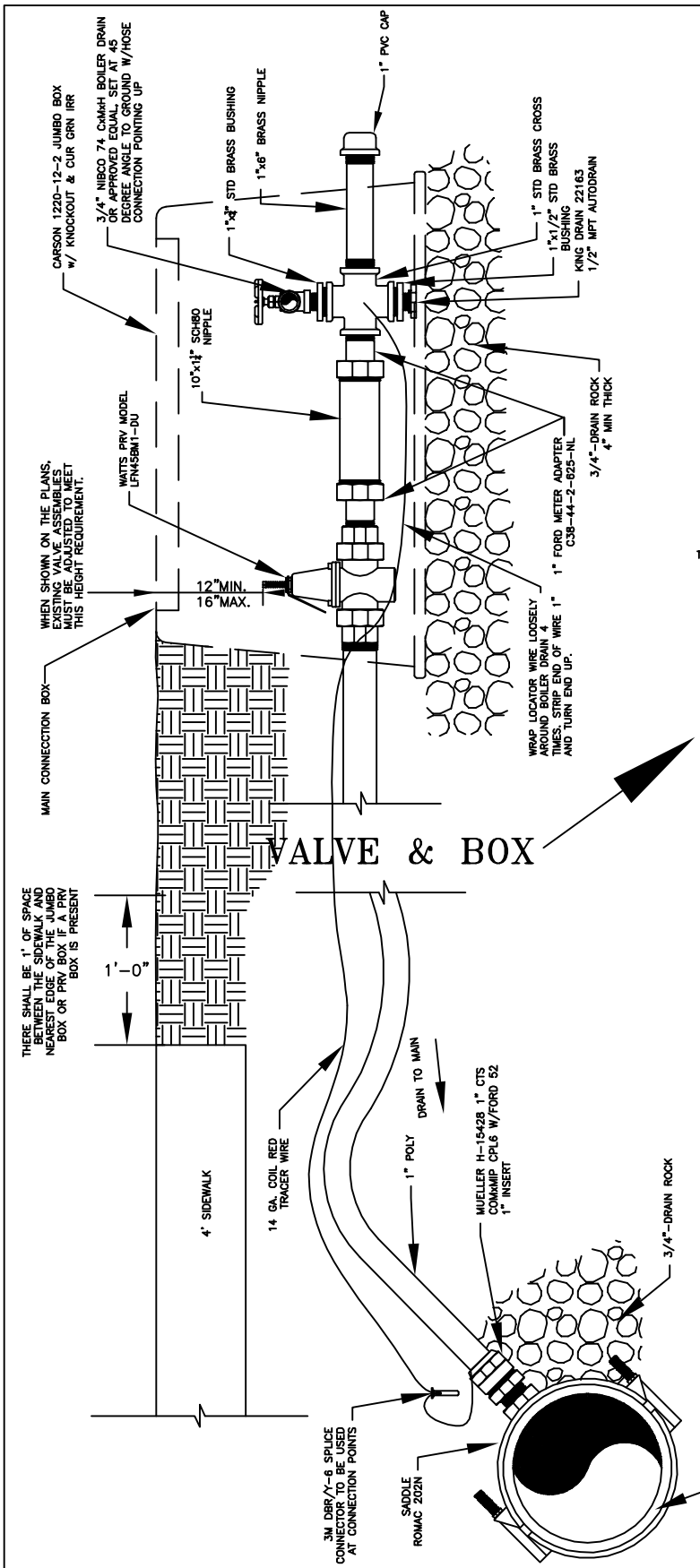

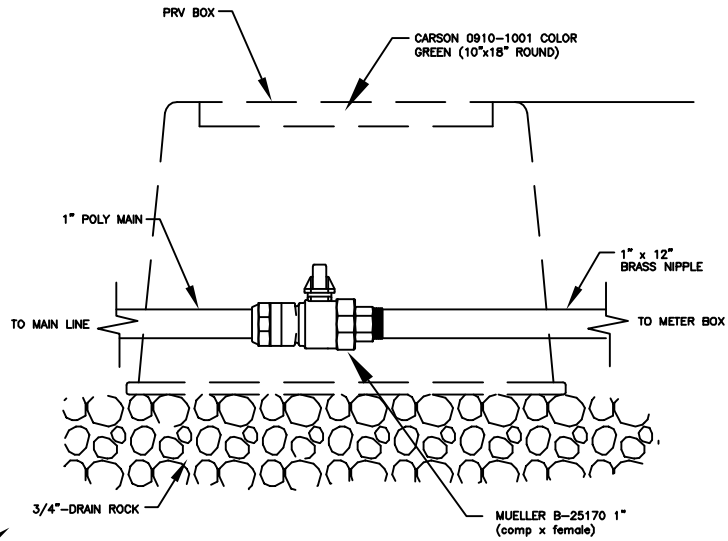

NOTES:

1. WHERE COMBINATION CURB, GUTTER, AND SIDEWALK EXISTS, THE IRRIGATION BOX SHALL BE PLACED 1' BEHIND THE SIDEWALK.
2. IN LOCATIONS, WHERE NO CURB AND GUTTER EXIST OR ONLY CURB AND GUTTER WITHOUT SIDEWALK, THE IRRIGATION BOX SHALL BE PLACED ON THE PROPERTY LINE.
   COORDINATE W/ ALPINE CITY R.W.
3. ALL FITTINGS TO BE AS SPECIFIED OR APPROVED EQUAL.
4. PIPE DOPE TO BE USED ON ALL THREADED FITTINGS.
   (RECTOR SEAL T PLUS 2 TEFLON ENRICHED THREAD SEALANT.)

STATEMENT OF USE

THIS DOCUMENT AND ANY ILLUSTRATIONS HEREON ARE PROVIDED AS STANDARD CONSTRUCTION DETAILS WITHIN ALPINE CITY. DEVEATION FROM THIS DOCUMENT REQUIRES APPROVAL OF ALPINE CITY, ALPINE CITY CORPRTATION CAN NOT BE HELD LIABLE FOR MISSUSE OR CHANGES REGARDING THIS DOCUMENT.

REVISION

NO.		BY	APRL	DATE

ALPINE CITY
ESTABLISHED 1850

CAD FILE: \Engineering\Standard Drawings\2015\PI CONNECTION 66.dwg

Pressurized Irrigation System w/PRV

ALPINE CITY
20 NORTH MAIN
ALPINE, UT 84004

STANDARD DRAWING NUMBER: 25

PLOT SCALE:	N.T.S.
DRAWN BY:	B.D.B.
DESIGN BY:	
CHECKED BY:	
ADOPTED DATE:	8/10/05

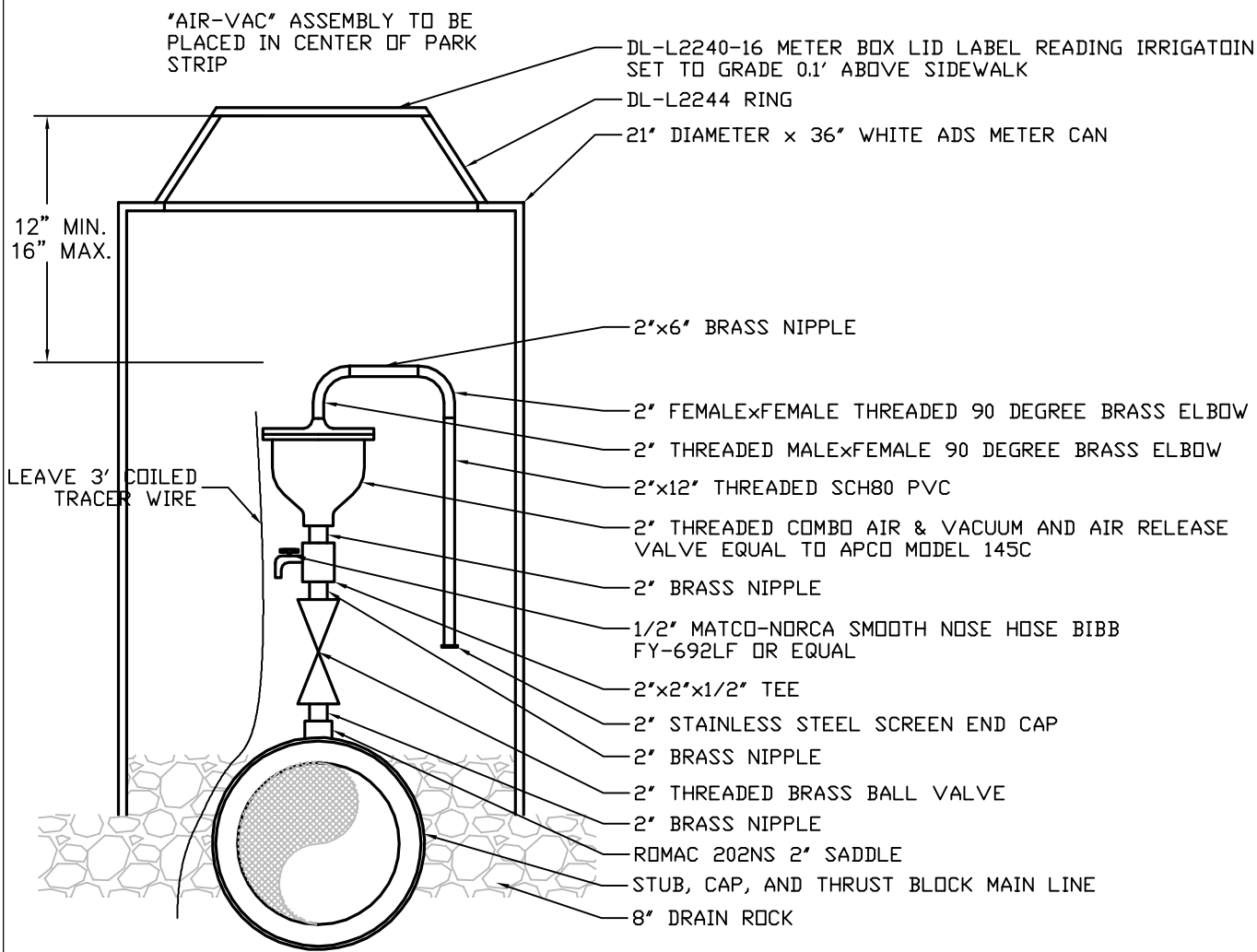

STATEMENT OF USE

THIS DOCUMENT AND ANY ILLUSTRATIONS HEREON ARE PROVIDED AS STANDARD CONSTRUCTION DETAILS WITHIN ALPINE CITY. DEVEATION FROM THIS DOCUMENT REQUIRES APPROVAL OF ALPINE CITY, ALPINE CITY CORPRTATION CAN NOT BE HELD LIABLE FOR MISSUSE OR CHANGES REGARDING THIS DOCUMENT.

REVISION

NO.		BY	APRL.	DATE

ALPINE CITY
ESTABLISHED 1850

CAD FILE:E:\ENGINEERING\STANDARD DRAWINGS\2015 UPDATED (CURRENT)\26 PI AIRVAC

SECONDARY WATER AIR-VAC ASSEMBLY

ALPINE CITY
20 NORTH MAIN
ALPINE, UT 84004

STANDARD DRAWING NUMBER:	26
PLOT SCALE:	N.T.S.
DRAWN BY:	WJM
DESIGN BY:	
CHECKED BY:	
ADOPTED DATE:	12/7/18

NOTE: METER BOX, COVER, COPPERSETTER, CORPORATION STOP, & SERVICE LINES TO BE FURNISHED AND INSTALLED BY DEVELOPER.

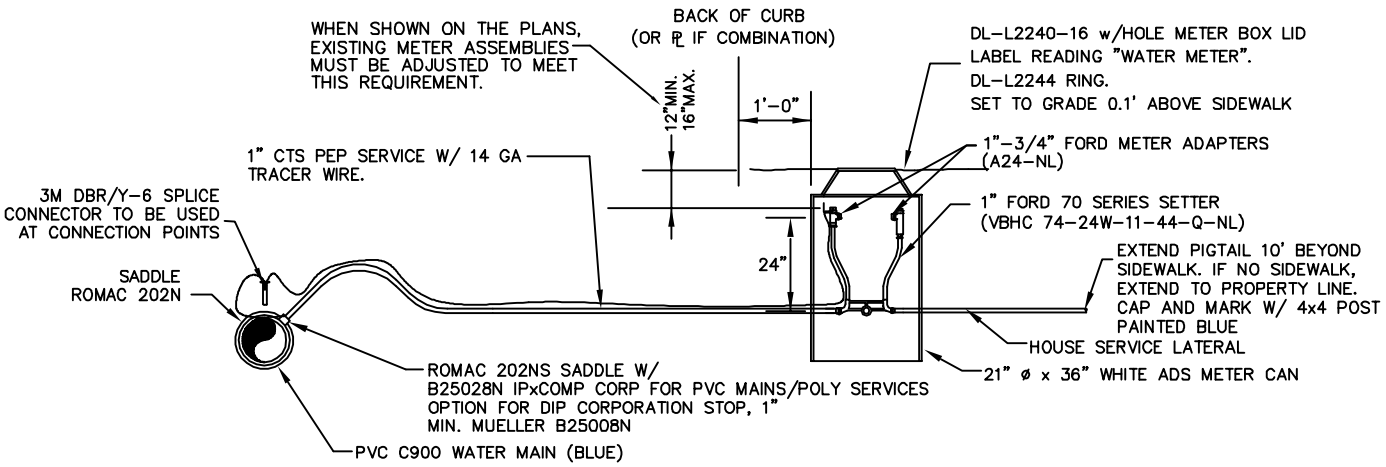

1" WATER SERVICE CONNECTION

N.T.S.

NOTE: METER BOX, COVER, COPPERSETTER, CORPORATION STOP, & SERVICE LINES TO BE FURNISHED AND INSTALLED BY DEVELOPER.

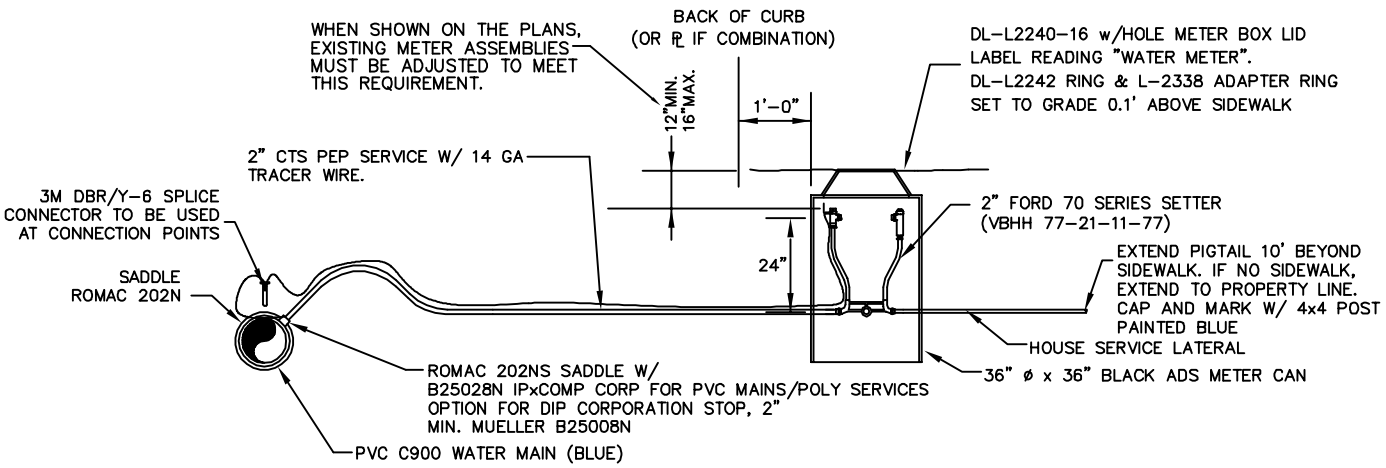

NOTE: FOR 1.5" SERVICES: ALL PARTS SHOWN ABOVE ARE THE SAME EXCEPT THE SERVICE LINE AND SETTER, WHICH WOULD BOTH BE CHANGED TO 1.5"

1.5" & 2" WATER SERVICE CONNECTIONS

N.T.S.

STATEMENT OF USE

THIS DOCUMENT AND ANY ILLUSTRATIONS HEREON ARE PROVIDED AS STANDARD CONSTRUCTION DETAILS WITHIN ALPINE CITY. DEVEATION FROM THIS DOCUMENT REQUIRES APPROVAL OF ALPINE CITY, ALPINE CITY CORPRTATION CAN NOT BE HELD LIABLE FOR MISSUSE OR CHANGES REGARDING THIS DOCUMENT.

REVISION

NO.		BY	APRL	DATE

ALPINE CITY
ESTABLISHED 1850

CAD FILE: E:\ENGINEERING\STANDARD DRAWINGS\2015 UPDATED (CURRENT)\27 WATER SERVICES

WATER SERVICE CONNECTION DETAIL

ALPINE CITY
20 NORTH MAIN
ALPINE, UT 84004

STANDARD DRAWING NUMBER:	27
PLOT SCALE:	N.T.S.
DRAWN BY:	WJM
DESIGN BY:	
CHECKED BY:	
ADOPTED DATE:	4/14/04

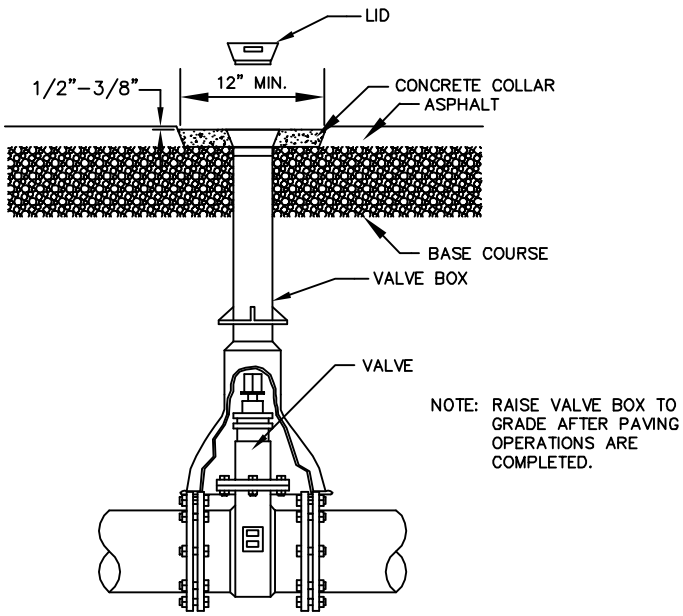

VALVE BOX COLLAR DETAIL

N.T.S.

STATEMENT OF USE

THIS DOCUMENT AND ANY ILLUSTRATIONS HEREON ARE PROVIDED AS STANDARD CONSTRUCTION DETAILS WITHIN ALPINE CITY. DEVEATION FROM THIS DOCUMENT REQUIRES APPROVAL OF ALPINE CITY, ALPINE CITY CORPRTATION CAN NOT BE HELD LIABLE FOR MISSUSE OR CHANGES REGARDING THIS DOCUMENT.

REVISION

NO.		BY	APRL	DATE

ALPINE CITY
ESTABLISHED 1850

CAD FILE: E:\ENGINEERING\STANDARD DRAWINGS\2015 UPDATED (CURRENT)\27A VALVE BOX

VALVE BOX DETAIL

ALPINE CITY
20 NORTH MAIN
ALPINE, UT 84004

STANDARD DRAWING NUMBER: 27a

PLOT SCALE:	N.T.S.
DRAWN BY:	WJM
DESIGN BY:	
CHECKED BY:	
ADOPTED DATE:	4/14/04

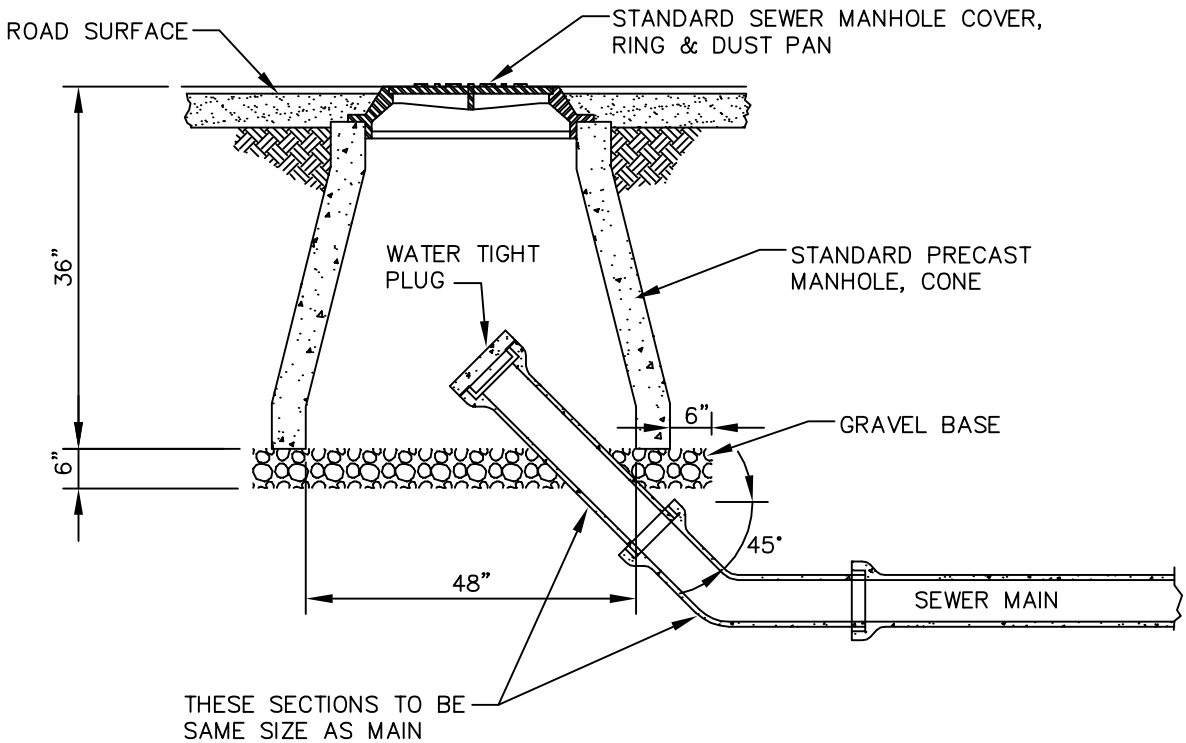

TEMPORARY SEWER MAIN CLEANOUT

N.T.S.

STATEMENT OF USE

THIS DOCUMENT AND ANY ILLUSTRATIONS HEREON ARE PROVIDED AS STANDARD CONSTRUCTION DETAILS WITHIN ALPINE CITY. DEVEATION FROM THIS DOCUMENT REQUIRES APPROVAL OF ALPINE CITY, ALPINE CITY CORPRTATION CAN NOT BE HELD LIABLE FOR MISSUSE OR CHANGES REGARDING THIS DOCUMENT.

REVISION

NO.		BY	APRL	DATE

ALPINE CITY
ESTABLISHED 1850

CAD FILE: E:\ENGINEERING\STANDARD DRAWINGS\2015 UPDATED (CURRENT)\28 SEWCNOUT

TEMPORARY SEWER MAIN CLEANOUT

ALPINE CITY
20 NORTH MAIN
ALPINE, UT 84004

STANDARD DRAWING NUMBER:	28
PLOT SCALE:	N.T.S.
DRAWN BY:	WJM
DESIGN BY:	
CHECKED BY:	
ADOPTED DATE:	4/14/04

ALPINE CITY
ESTABLISHED 1850

PUBLIC OPEN SPACE

SIGN SPECIFICATIONS

- SIGN TO BE 18"x24"
- PRINTED WITH BLACK LETTERS, WHITE BACKGROUND
- LAMINATED AND STAPLED TO PLYWOOD
- WIRED TO T-POSTS
- SPACED ONE PER JOB SITE IN A VISIBLE LOCATION IF MORE THAN 300' OF FENCING REQ'D, ONE SIGN TO BE PLACED EVERY 300'

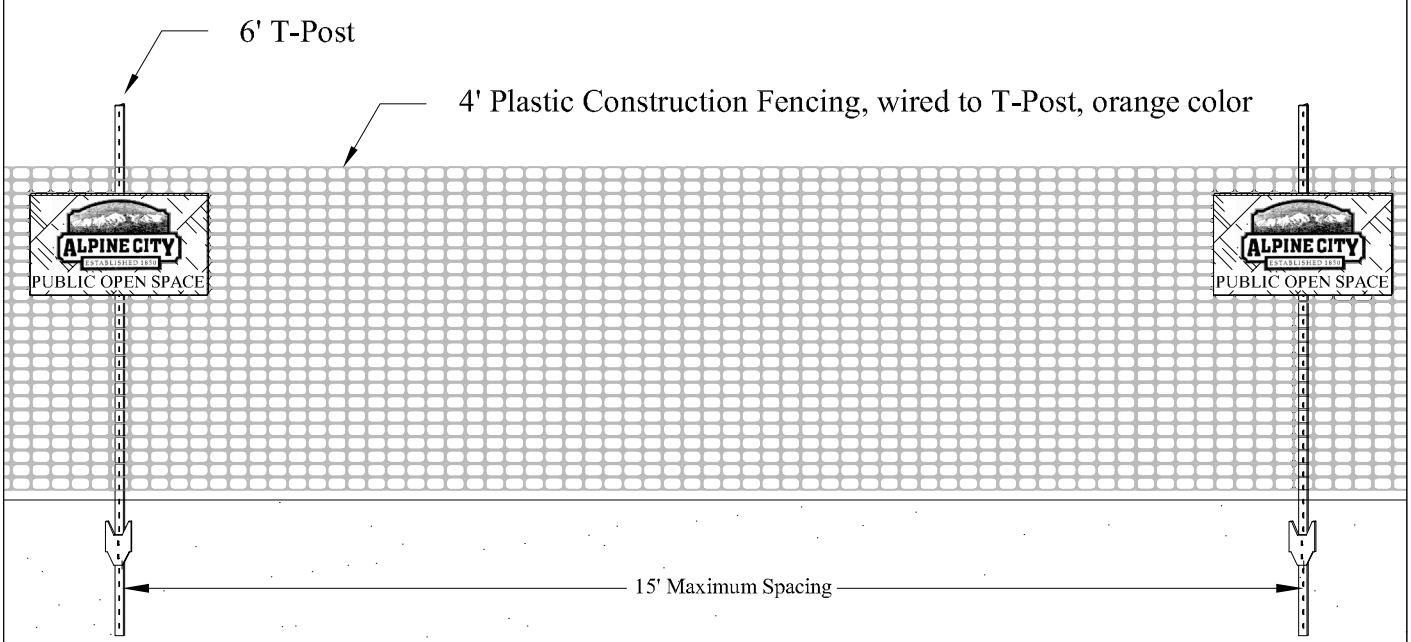

STATEMENT OF USE

THIS DOCUMENT AND ANY ILLUSTRATIONS HEREON ARE PROVIDED AS STANDARD CONSTRUCTION DETAILS WITHIN ALPINE CITY. DEVEATION FROM THIS DOCUMENT REQUIRES APPROVAL OF ALPINE CITY, ALPINE CITY CORPRTATION CAN NOT BE HELD LIABLE FOR MISSUSE OR CHANGES REGARDING THIS DOCUMENT.

REVISION

NO.		BY	APRL	DATE

ALPINE CITY
ESTABLISHED 1850

CAD FILE: D:\ENGINEERING\STANDARD DRAWINGS\2015 UPDATED (CURRENT)\29 PUBLIC OPEN SPACE FENCING

PUBLIC OPEN SPACE FENCING

ALPINE CITY
20 NORTH MAIN
ALPINE, UT 84004

STANDARD DRAWING NUMBER:	29
PLOT SCALE:	N.T.S.
DRAWN BY:	WJM
DESIGN BY:	
CHECKED BY:	
ADOPTED DATE:	4/14/04

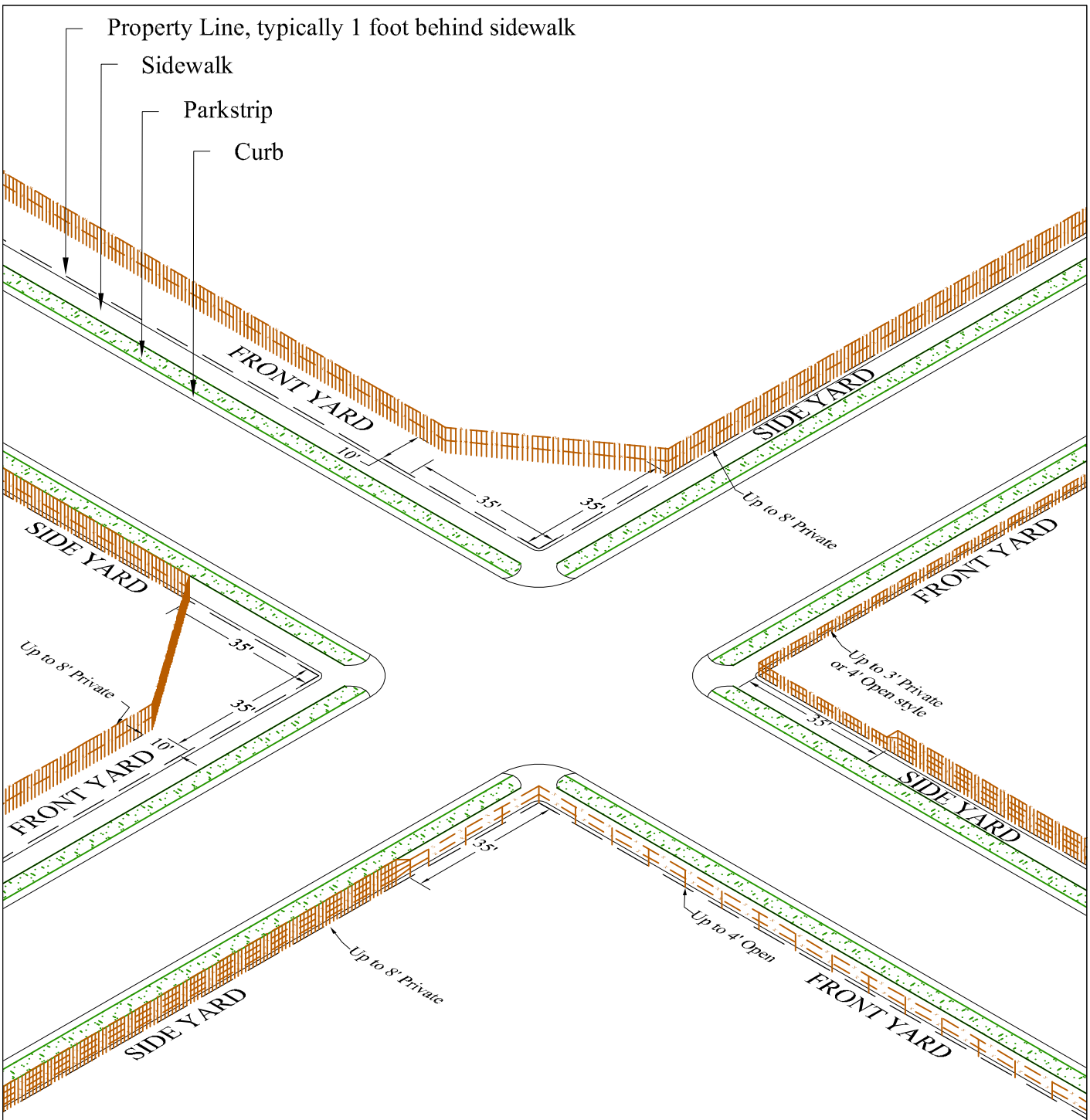

NOTE: SEE DEVELOPMENT CODE SECTION 3.21.6
ALL PARTS OF THE FENCE TO BE PLACED NO CLOSER THAN 1 FOOT BEHIND SIDEWALK (OR ON PROPERTY LINES) WITH HEIGHTS AS SHOWN. FREE BUILDING PERMIT REQUIRED.

STATEMENT OF USE

THIS DOCUMENT AND ANY ILLUSTRATIONS HEREON ARE PROVIDED AS STANDARD CONSTRUCTION DETAILS WITHIN ALPINE CITY. DEVEATION FROM THIS DOCUMENT REQUIRES APPROVAL OF ALPINE CITY, ALPINE CITY CORPRTATION CAN NOT BE HELD LIABLE FOR MISSUSE OR CHANGES REGARDING THIS DOCUMENT.

REVISION

NO.		BY	APRL.	DATE

ALPINE CITY
ESTABLISHED 1850

CAD FILE: E:\ENGINEERING\STANDARD DRAWINGS\2015 UPDATED (CURRENT)\30 FENCING REGULATIONS

FENCING REGULATIONS

ALPINE CITY
20 NORTH MAIN
ALPINE, UT 84004

STANDARD DRAWING NUMBER:	30
PLOT SCALE:	N.T.S.
DRAWN BY:	WJM
DESIGN BY:	
CHECKED BY:	
ADOPTED DATE:	4/14/04

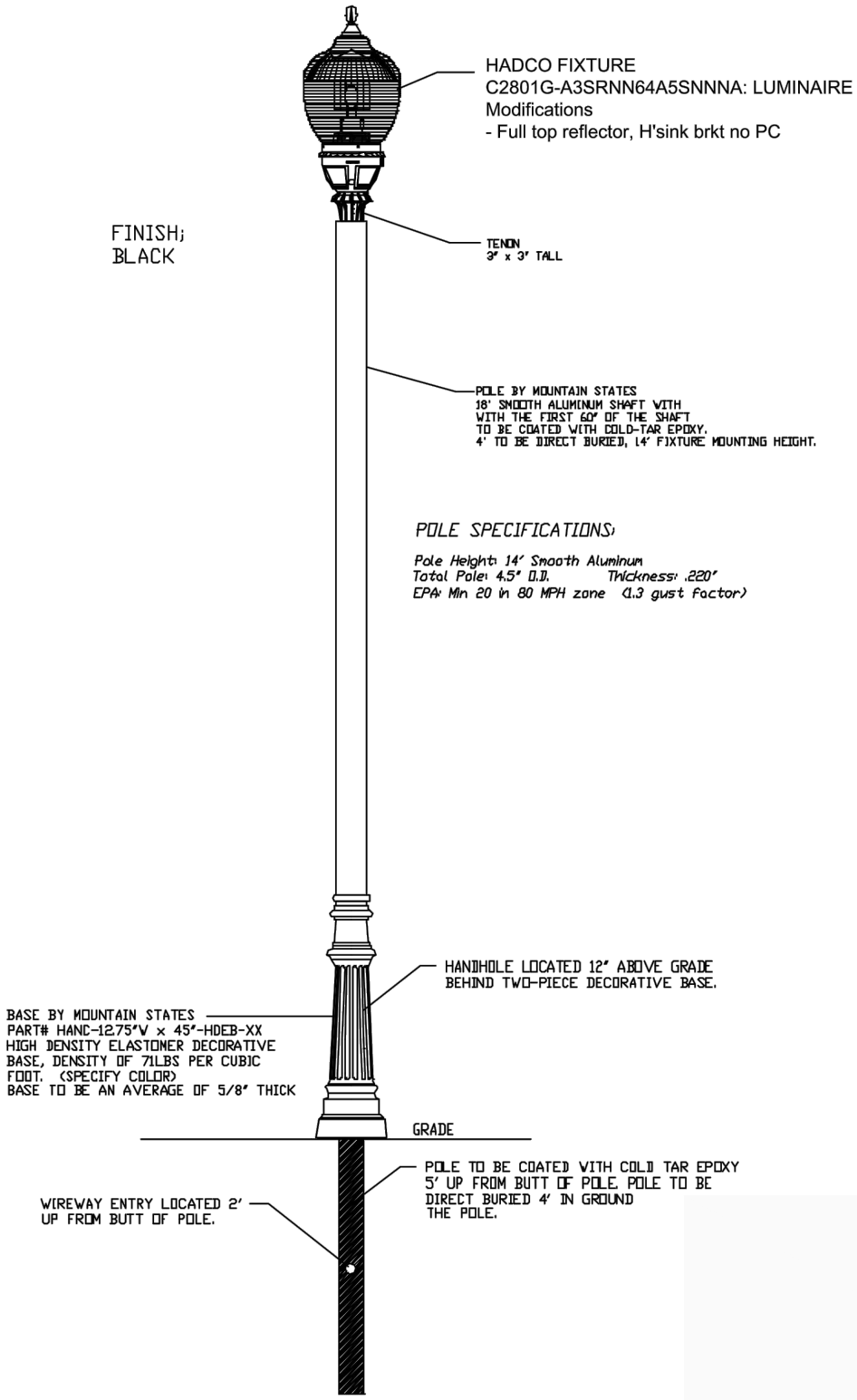

STATEMENT OF USE

THIS DOCUMENT AND ANY ILLUSTRATIONS HEREON ARE PROVIDED AS STANDARD CONSTRUCTION DETAILS WITHIN ALPINE CITY. DEVEATION FROM THIS DOCUMENT REQUIRES APPROVAL OF ALPINE CITY, ALPINE CITY CORPRTATION CAN NOT BE HELD LIABLE FOR MISSUSE OR CHANGES REGARDING THIS DOCUMENT.

REVISION

NO.		BY	APRL.	DATE

ALPINE CITY
ESTABLISHED 1850

CAD FILE: E:\ENGINEERING\STANDARD DRAWINGS\2015 UPDATED (CURRENT)\31 STREET LIGHT

RESIDENTIAL STREET LIGHT

ALPINE CITY
20 NORTH MAIN
ALPINE, UT 84004

STANDARD DRAWING NUMBER: 31

PLOT SCALE:	N.T.S.
DRAWN BY:	WJM
DESIGN BY:	
CHECKED BY:	
ADOPTED DATE:	12/7/18

HADCO FIXTURE
C2801E: LUMINARE
MODIFICATIONS: Logo Case

Finish;
Black

Tenon 3" x 3" Tall

Pole by Mountain States Lighting
14' extruded fluted aluminum shaft
with the first 16" of the shaft
to be coated with cold-tar epoxy

Pole Specifications:
Mounting Height: 14'
Pole O.D.: 5.0"
Wall Thickness: .250"
EPA: Min 20 in 80 MPH zone (1.3 gust factor)
Anchor Plate: 12" bolt circle w/ 3/4" x 18" bolts

Note!
If depth cannot be
met mass must be
equivalent to mass
shown

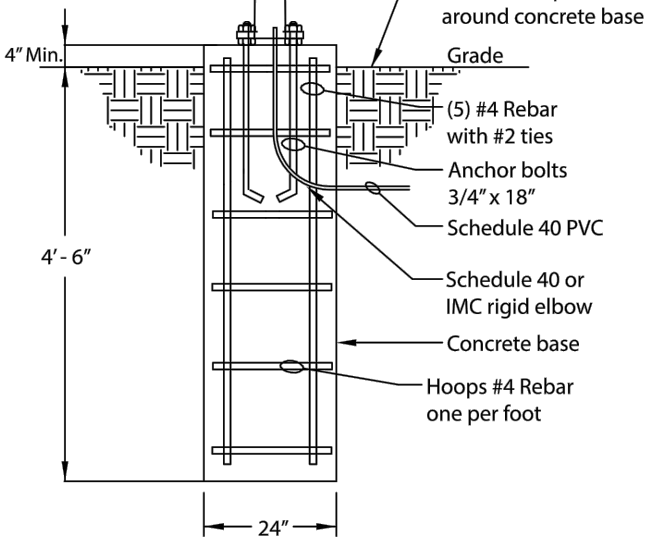

ARTERIAL - CONCRETE BASE DETAIL

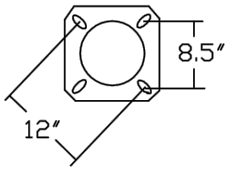

Anchor base detail
12" bolt circle
Anchor bolts: 3/4" x 18"

Base by Mountain States Lighting
Part # Hanc-12.75" W x 45"-HDEB-BK
High density elastomer decorative
base, (Non-corroding).
Density: 71lbs per cubic ft.
Base to be an average of 5/8" thick

Handhole located 12" above grade
behind two-piece decorative base.

STATEMENT OF USE

THIS DOCUMENT AND ANY ILLUSTRATIONS HEREON ARE PROVIDED AS STANDARD CONSTRUCTION DETAILS WITHIN ALPINE CITY. DEVEATION FROM THIS DOCUMENT REQUIRES APPROVAL OF ALPINE CITY, ALPINE CITY CORPRTATION CAN NOT BE HELD LIABLE FOR MISSUSE OR CHANGES REGARDING THIS DOCUMENT.

REVISION

NO.		BY	APRL.	DATE

ALPINE CITY
ESTABLISHED 1850

CAD FILE: E:\ENGINEERING\STANDARD DRAWINGS\2015 UPDATED (CURRENT)\31A STREET LIGHT - DECORATIVE BOLT DOWN

DOWNTOWN STREET LIGHT

ALPINE CITY
20 NORTH MAIN
ALPINE, UT 84004

STANDARD DRAWING NUMBER: 31a

PLOT SCALE:	N.T.S.
DRAWN BY:	WJM
DESIGN BY:	
CHECKED BY:	
ADOPTED DATE:	12/7/18

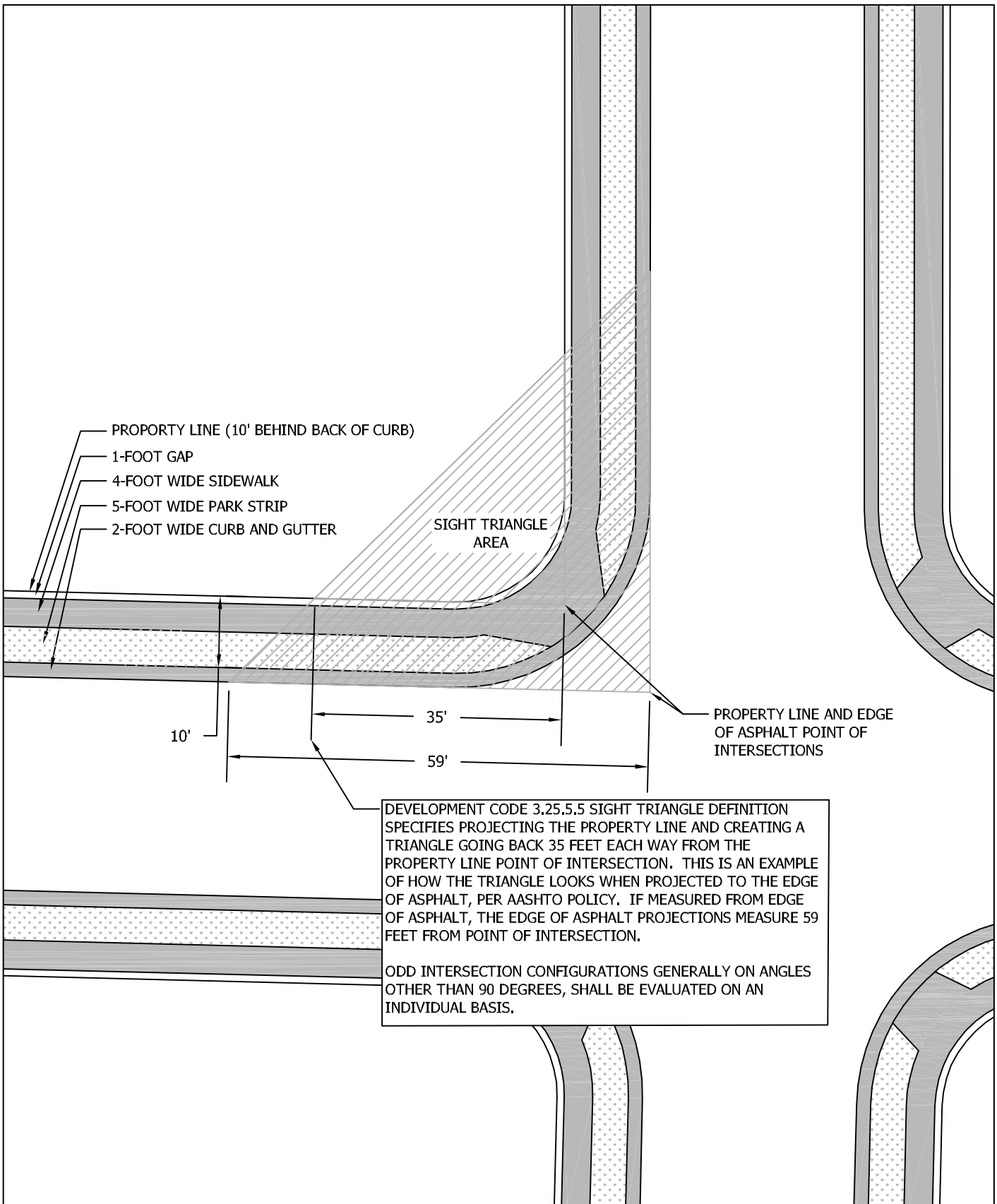

DEVELOPMENT CODE 3.25.5.5 SIGHT TRIANGLE DEFINITION SPECIFIES PROJECTING THE PROPERTY LINE AND CREATING A TRIANGLE GOING BACK 35 FEET EACH WAY FROM THE PROPERTY LINE POINT OF INTERSECTION. THIS IS AN EXAMPLE OF HOW THE TRIANGLE LOOKS WHEN PROJECTED TO THE EDGE OF ASPHALT, PER AASHTO POLICY. IF MEASURED FROM EDGE OF ASPHALT, THE EDGE OF ASPHALT PROJECTIONS MEASURE 59 FEET FROM POINT OF INTERSECTION.

ODD INTERSECTION CONFIGURATIONS GENERALLY ON ANGLES OTHER THAN 90 DEGREES, SHALL BE EVALUATED ON AN INDIVIDUAL BASIS.

STATEMENT OF USE

THIS DOCUMENT AND ANY ILLUSTRATIONS HEREON ARE PROVIDED AS STANDARD CONSTRUCTION DETAILS WITHIN ALPINE CITY. DEVEATION FROM THIS DOCUMENT REQUIRES APPROVAL OF ALPINE CITY. ALPINE CITY CORPRTATION CAN NOT BE HELD LIABLE FOR MISSUSE OR CHANGES REGARDING THIS DOCUMENT.

REVISION

NO.		BY	APRL	DATE

ALPINE CITY
ESTABLISHED 1850

CAD FILE: E:\ENGINEERING\STANDARD DRAWINGS\2010 UPDATED (CURRENT)\32 SIGHT TRIANGLE

SIGHT TRIANGLE

ALPINE CITY
20 NORTH MAIN
ALPINE, UT 84004

STANDARD DRAWING NUMBER: 32

PLOT SCALE:	N.T.S.
DRAWN BY:	J.M.
DESIGN BY:	
CHECKED BY:	
ADOPTED DATE:	10/13/11

PASTURE GRASS MIX

20 lbs CABIN BLEND AND 5 lbs ROCKY MOUNTAIN WILDFLOWER MIX PER ACRE

CABIN BLEND	
SPECIES	% BY WEIGHT
MOUNTAIN BROME	30
SLENDER WHEATGRASS	25
SANDBERG BLUEGRASS	5
BIG BLUEGRASS	5
SHEEP FESCUE	5
WESTERN WHEATGRASS	20
BEARDLESS BLUEBUNCH WHEATGRASS	10

ROCKY MOUNTAIN WILDFLOWER MIX	
SPECIES	% BY WEIGHT
BLUE FLAX	9
PURPLE CONEFLOWER	10
BLACKEYED SUSAN	2
CALIFORNIA POPPY	11
WALLFLOWER	6
FIREWHEEL	7
WILD LUPINE	10
LANCE-LEAVED COREOPSIS	8
PRAIRIE CONEFLOWER	2
MEXICAN HAT	2
FLANDERS POPPY	2
YELLOW COSMOS	5
BACHELOR BUTTON	6
PLAINS COREOPSIS	2
MOUNTAIN PHLOX	1
ROCKY MOUNTAIN IRIS	3
MOUNTAIN LUPINE	6
SHOWY GOLDENEYE	3
BLANKET FLOWER	6

WETLANDS/STREAM BANK GRASS MIX

15 LBS PER ACRE

WETLAND/STREAMBANK MIX	
SPECIES	% BY WEIGHT
INLAND SALTGRASS	13.3
WESTERN WHEATGRASS	13.3
STREAMBANK WHEATGRASS	13.3
NEBRASKA SEDGE	20
BLUEJOINT REEDGRASS	1.67
BEAKED SEDGE	20
BALTIC RUSH	1.67
MEADOW SEDGE	16.67

STATEMENT OF USE

THIS DOCUMENT AND ANY ILLUSTRATIONS HEREON ARE PROVIDED AS STANDARD CONSTRUCTION DETAILS WITHIN ALPINE CITY. DEVEATION FROM THIS DOCUMENT REQUIRES APPROVAL OF ALPINE CITY, ALPINE CITY CORPRTATION CAN NOT BE HELD LIABLE FOR MISSUSE OR CHANGES REGARDING THIS DOCUMENT.

REVISION

NO.		BY	APRL.	DATE

ALPINE CITY
ESTABLISHED 1850

CAD FILE: E:\ENGINEERING\STANDARD DRAWINGS\2015 UPDATED (CURRENT)\33 SEED MIXTURES

STANDARD SEED MIXTURES

ALPINE CITY
20 NORTH MAIN
ALPINE, UT 84004

STANDARD DRAWING NUMBER: 33

PLOT SCALE:	N.T.S.
DRAWN BY:	WJM
DESIGN BY:	
CHECKED BY:	
ADOPTED DATE:	12/7/18

PER DEVELOPMENT CODE 4.07.190, ALL IRRIGATION COMPANY DITCHES ARE REQUIRED TO BE PIPED UNDERGROUND AS PART OF DEVELOPMENT.

THE MINIMUM PIPE SIZE FOR IRRIGATION CO. NEEDS IS AS FOLLOWS:
WEST FIELD DITCH - 36 INCHES
NORTH FIELD DITCH - 30 INCHES
FORT DITCH - 30 INCHES
EAST FIELD DITCH - 36 INCHES
HIGH BENCH DITCH - 30 INCHES

THE SIZING OF PIPES FOR ALL DITCHES MUST ALSO CONSIDER THE NEEDS OF THE CITY. COORDINATION WITH ALPINE CITY IS REQUIRED.

ALL PIPED DITCHES SHOULD USE REINFORCED CONCRETE PIPE FOR ROAD CROSSINGS AND WHERE DEPTHS ARE LESS THAN 2 FEET OR MORE THAN 8 FEET DEEP TO THE TOP OF PIPE.

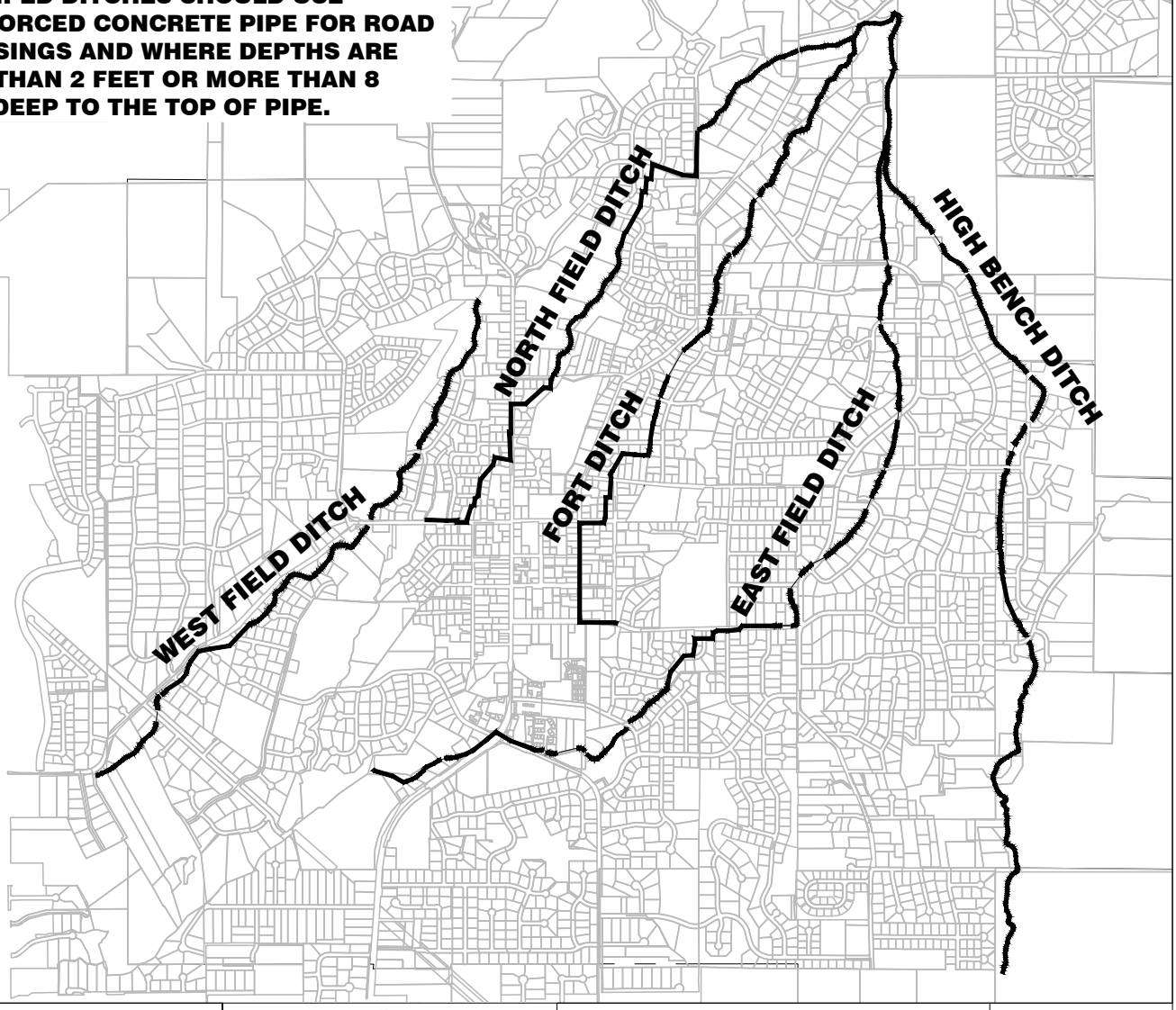

STATEMENT OF USE

THIS DOCUMENT AND ANY ILLUSTRATIONS HEREON ARE PROVIDED AS STANDARD CONSTRUCTION DETAILS WITHIN ALPINE CITY. DEVEATION FROM THIS DOCUMENT REQUIRES APPROVAL OF ALPINE CITY, ALPINE CITY CORPRTATION CAN NOT BE HELD LIABLE FOR MISSUSE OR CHANGES REGARDING THIS DOCUMENT.

REVISION

NO.		BY	APRL.	DATE

ALPINE CITY
ESTABLISHED 1850

CAD FILE: E:\ENGINEERING\STANDARD DRAWINGS\2015 UPDATED (CURRENT)\34 IRRIGATION COMPANY DITCHES

IRRIGATION CO. DITCHES

ALPINE CITY
20 NORTH MAIN
ALPINE, UT 84004

STANDARD DRAWING NUMBER: 34

PLOT SCALE:	N.T.S.
DRAWN BY:	WJM
DESIGN BY:	
CHECKED BY:	
ADOPTED DATE:	12/7/18

ALPINE PLANNING COMMISSION AGENDA

SUBJECT: Planning Commission Minutes October 15, 2019

FOR CONSIDERATION ON: 12 November 2019

PETITIONER: Staff

ACTION REQUESTED BY PETITIONER: Approve Minutes

BACKGROUND INFORMATION:

Minutes from the October 15, 2019 Planning Commission Meeting.

STAFF RECOMMENDATION:

Review and approve the Planning Commission Minutes.

ALPINE CITY PLANNING COMMISSION MEETING
Alpine City Hall, 20 North Main, Alpine, UT
October 15, 2019

I. GENERAL BUSINESS

A. Welcome and Roll Call: The meeting was called to order at 7:00 pm by Co-Chairman Bryce Higbee. The following were present and constituted a quorum:

Chairman: David Fotheringham
Commission Members: Bryce Higbee, Jane Griener, Alan MacDonald, John MacKay, Jessica Smuin, Sylvia Christiansen
Excused: David Fotheringham
Staff: Austin Roy, Jed Muhlestein, Marla Fox

Others: Ted Stillman

B. Prayer/Opening Comments: Jane Griener
C. Pledge of Allegiance: Ted Stillman

II. PUBLIC COMMENT

There were no public comments.

III. ACTION ITEMS

A. Public Hearing – Amendment to Development Code – Fences on Retaining Walls – Alan & LeeAnn Akina

Austin Roy said that the Akina family would like to build a privacy fence on the back of their property. However current ordinance prohibited privacy fences on top of retaining walls. They felt it was their right to be able to fence their property with a privacy fence just like any other resident in the City, even though the back of their property terminated in a drop-off atop a retaining wall. The current ordinance pertaining to fences on retaining walls was originally intended to prevent the death or accident of an individual jumping a fence. The proposed change sought to eliminate the restriction on privacy fences on top of retaining walls. Austin Roy further explained that, essentially, the current ordinance would be moved to the Open Space and Trails section of the Development Code.

Bryce Higbee opened the Public Hearing.

Alan Akina, resident and applicant, said no one would jump over the fence unless it was someone trying to steal from them. Mr. Akina said they were building a swimming pool and did not have the room to move the fence into the yard an extra four feet. He also said the neighbors wanted them to have a privacy fence to maintain the look of the neighborhood. Furthermore, the Akinas would feel safer having a solid fence.

Bryce Higbee closed the Public Hearing.

The Planning Commission had a discussion about why the retaining wall ordinance was adopted in the first place. They wanted to know if an exception could be made. Jed Muhlestein said if the Planning Commission changed the ordinance to allow exceptions, several items like this one would come forward for review because there were still several lots on the mountain.

DRAFT

MOTION: Sylvia Christiansen moved to recommend the proposed amendments to Article 3.21.060 of the Development Code be approved as proposed. John MacKay seconded the motion. There were 5 Ayes and 1 Nays (recorded below). The motion passed.

Ayes:	**Nays:**
Bryce Higbee	Jane Griener
John MacKay	
Alan MacDonald	
Jessica Smuin	
Sylvia Christiansen	

B. Public Hearing – Amendment to Development Code – PRD Slope Requirements

Jed Muhlestein said that Staff was proposing a change to the ordinance regarding slope requirements for lots located within a Planned Residential Development (PRD). The proposed changes would change the way that property lines looked, and would allow for more flexibility when including slope into a lot or development. Jed Muhlestein presented codes from five different cities, noting that they all showed a 30% slope on the buildable area. He said Alpine City had a restriction on the buildable areas and also on the lot.

Jed Muhlestein explained that the new code would state:

Notwithstanding the minimum open space requirements set forth under Part 1, the designated open space area shall include and contain all 100 year flood plain areas, defined floodways, all avalanche and rock fall hazard areas, all areas having a slope of twenty five (25) percent or greater (less the areas defined below), or any other area of known significant physical hazard for development.

a. Up to 15% of an individual lot may contain ground having a slope of more than 25%.

b. Once a Concept Plan has been approved by the Planning Commission, lot lines of the approved
Concept Plan may be adjusted by the City Engineer to square up the lot by straightening and eliminating multiple segmented property lines.

Bryce Higbee opened the Public Hearing. No comments were made, and Bryce Higbee closed the Public Hearing

MOTION: Alan MacDonald moved to recommend that the proposed amendments to Article 3.09.040 of the Development Code be approved as proposed with changes made to take out verbiage stating the lot can meet the current ordinance. Jane Griener seconded the motion. There were 6 Ayes and 0 Nays (recorded below). The motion passed.

Ayes:	**Nays:**
Bryce Higbee	None
Jane Griener	
John MacKay	
Alan MacDonald	
Jessica Smuin	
Sylvia Christiansen	

DRAFT

C. Public Hearing – Moderate Income Housing Elements

Austin Roy said Per Senate Bill 34 Alpine City was tasked with implementing three or more strategies as part of the Moderate-Income Housing Element by the end of 2019. The City Council had identified the following:

E. Create or allow for, and reduce regulations related to, accessory dwelling units in residential zones
F. Preserve existing Moderate-Income Housing
G. Implement a mortgage assistance program for employees of the municipality or of an employer that provides contracted services to the municipality

Bryce Higbee opened the Public Hearing. No comments were made, and Bryce Higbee closed the Public Hearing

MOTION: John MacKay moved to recommend that the Moderate Income Housing Element of the General Plan be approved as proposed. Alan MacDonald seconded the motion. There were 6 Ayes and 0 Nays (recorded below). The motion passed.

Ayes:	**Nays:**
Bryce Higbee	None
Jane Griener	
John MacKay	
Alan MacDonald	
Jessica Smuin	
Sylvia Christiansen	

D. Moderate Income Housing vs. 55+ Community Discussion

Austin Roy said the Applicant would like to discuss the potential future development of a piece of property in Alpine City. The Applicant was considering either a moderate-income housing development or a 55+ community and would like to receive feedback from the Planning Commission. Austin Roy said the property that the applicant was assessing—located south of the round-about—would have to be re-zoned.

Dick George, resident and applicant said he would like to build moderate income housing or 55+ units, but recognized that property was expensive.

Bryce Higbee said this area would be better suited for commercial businesses because the City did not have a large downtown area and it needed a tax base. He said the timing had to be right for all parties and a 55+ community would require a re-zone. Austin Roy said the Planning Commission could create a new mixed zone, if needed.

Jessica Smuin added that as Utah County doubled in size, people were going to want amenities closer to home.

E. Lambert Park Trail Proposal

Austin Roy said the Trail Committee was proposing a new trail in Lambert Park to be dedicated solely for pedestrian traffic only (no bikes, horses, etc.). Complaints from residents about near accidents with bikers and horses had prompted the Trail Committee to investigate the possibility of a pedestrian-only trail. The Trail Committee would present the proposed alignment and location of the trail at the meeting.

DRAFT

Breezy Anson, from the Trail Committee, said they wanted to create a looped trail that was long enough that runners would enjoy it. This trail would work for runners, walkers, and hikers without colliding with bikers. Mr. Anson said he had a Scout that wanted to work on the trail for his Eagle project. The trail would be cut by hand with shovels and would be approximately two miles in length.

Breezy Anson presented a proposed downhill bike trail on a map. He said this project would have to be planned, and the Committee needed help cutting it because it was a more difficult trail to develop. Alan MacDonald said this was a wonderful plan for runners, walkers, and hikers to be able to enjoy the park and not have to look over their shoulder looking for bikers. Breezy Anson said he had registered for a class to learn about fundraisers and grants for these types of projects.

Jane Griener said there were grants for which the City could apply that had to do with promoting healthy activities within communities.

MOTION: Sylvia Christiansen moved to recommend that the new walking and running trail and the new downhill trail in Lambert Park be approved as proposed. Jane Griener seconded the motion. There were 6 Ayes and 0 Nays (recorded below). The motion passed.

Ayes:	**Nays:**
Bryce Higbee	None
Jane Griener	
John MacKay	
Alan MacDonald	
Jessica Smuin	
Sylvia Christiansen	

F. Short Term Rentals

Austin Roy explained that Alpine City currently had approximately 30-35 Short Term Rentals (i.e. Airbnb, VRBO, etc.) in town. Staff had received numerous complaints about one rental in particular; however, overall complaints had been few and far in between regarding existing Short Term Rentals (STRs). Currently, STRs were not allowed in the residential zones of the City per the definition of Residence found in Article 3.1.110:

***RESIDENCE**. A dwelling unit where an individual or family is actually domiciled at a given point in time and not a place of temporary sojourn or transient visit. Temporary sojourn or transient visit shall be thirty (30) days or less.*

It had been a challenge enforcing this ordinance since the burden of proof lied on the City. Website listings could not be used as evidence. Furthermore, activity occurred on private property where staff was limited by its inability to search and inspect the residences in question. A Short Term Rental ordinance could be used to either prohibit and restrict STRs, or regulate and enforce rules on allowed STRs through requirements, fines, fees and/or taxes. A new STR ordinance should consider the following:

- Number of STRs to be allowed in the City?
- Number of STRs to be allowed in a single residence?
- Maximum number of bedrooms allowed per STR unit?
- Owner occupied STRs? Or Local Manager required?
- Business License requirement?
- In which zones shall STRs be permitted?

- Parking Requirements?
- Fees and Taxes?

Staff drafted a Short Term Rental Ordinance for review by the Planning Commission. Ted Stillman said the City needed be very specific about its requirements in the event of a court case.

Jane Griener said she was against having Short Term Rentals (STRs) in Alpine City. She said the City's residents intentionally bought into single-family residential communities, and they did not want to live next to short term rentals. Sex offenders did not have to register to use short term rentals, which the City did not have any control over. Jane Griener expressed concerns regarding parking at these rentals. For these reasons, she did not believe the City should allow them.

Alan MacDonald said Short Term Rentals (STRs) undermine the City's Moderate Income Housing plans because people could make more money renting nightly than monthly. As they had discussed the Moderate Income Housing needs in the community, he believed that Short Term Rentals were counter intuitive. Bryce Higbee asked Ted Stillman from a code enforcement perspective, which would be easier to enforce: issuing 30 to 50 permits or prohibiting them altogether. Ted Stillman said it was about the same; either way, action was needed. He said we need an ordinance with some teeth in it.

Sylvia Christiansen said she would like to see twenty-five allowed and grandfathered in with proof they had been in operation for at least a year. Furthermore, STRs needed to provide off-street parking, be owner occupied, and the recommended fees needed to be lowered. Marla Fox explained that the City could not grandfather something in that was illegal. Bryce Higbee agreed, explaining that doing so would be favoring people who violated the law versus those who didn't.

Alan MacDonald asked Ted Stillman if the City were to allow fifty permits, and those fifty permits had been granted, how would they policy them moving forward. Ted Stillman said he would investigate issues as they arose through complaints.

Jane Griener said she would much rather live next to long term renters who wanted to be part of the community than new people coming in every week. Alan MacDonald agreed and explained that long term renters were an integral part of the community.

MOTION: Jane Griener moved to recommend crafting an ordinance that makes Short Term Rentals illegal.

Bryce Higbee said the Planning Commission should craft an ordinance and fine tune it so that it was enforceable. Additionally, the ordinance should include language stating that Short Term Rentals were in conflict with the City's Moderate Income Housing focus.

MOTION: Alan MacDonald moved to recommend DENIAL of the Short Term Rentals based on the following:

1. Short term rentals tend to limit or reduce the availability of Moderate Income Housing
2. Short Term Rentals are too often a nuisance to neighboring property owners
3. Staff draft an ordinance to allow for the effective enforcement of the probationof Short Term Rentals in the City of Alpine

Jessica Smuin said the number one goal in the General Plan regarding land use was to preserve the quality of life and existing atmosphere of the City. She said Alpine was not in the business of enforcing Short

Term Rentals, as it seemed like a lot for the City's Code Enforcement Officer to take on. Enforcing Short Term Rentals would be a full-time job.

Bryce Higbee asked if this was something that needed to go to David Church because of property right concerns. He wanted to see if there was any case law out there for something like this, and He wondered if this was a use that needed to be allowed but could be regulated. If this violated the City's General Plan in multiple areas, he wondered why they were considering the matter.

Jane Griener seconded the motion. There were 4 Ayes and 2 Nays (recorded below). The motion passed.

Ayes:	**Nays:**
Bryce Higbee	Sylvia Christiansen
Jane Griener	John MacKay
Alan MacDonald	
Jessica Smuin	

IV. Communications

Jane Griener congratulated Austin Roy and his family on their commercial.

Austin Roy said the next Planning Commission meeting will be on November 19th.

V. APPROVAL OF PLANNING COMMISSION MINUTES: October 1, 2019

MOTION: Sylvia Christiansen moved to approve the minutes for October 1, 2019, with corrections. Alan MacDonald seconded the motion. There were 6 Ayes and 0 Nays (recorded below). The motion passed.

Ayes:	**Nays:**
Bryce Higbee	None
Jane Griener	
John MacKay	
Alan MacDonald	
Jessica Smuin	
Sylvia Christiansen	

The meeting was adjourned at 8:50 pm.

DRAFT